Ran® 2" (50.8 mm)

Cast Iron Body High Pressure Diaphragm Pump

Technical Specifications

Pump Code	HF50-CX	Pump Housing Material	Cast Iron
Max. Flow Rate	295 lpm	Max. Size Pumpable Solids	6.2 mm
Max. Pump Speed	145 cpm	Max. Suction Lift	5 m
Displacement per cycle	2.03 liter	Max. Opreating Tempreture	105 ^{0}C
Fluid Inlet- Outlet Size	2"	Sound Level	78 dBa (at 5 bar)
Air Inlet Size	1/2"	Diaphragm Options	Santoprene - PTFE- BunaN- Viton
Max. Fluid Working Pressure	16 bar	Weight	62 kg
Max. Air Consumption	6 m^3/min		

Performance Curves

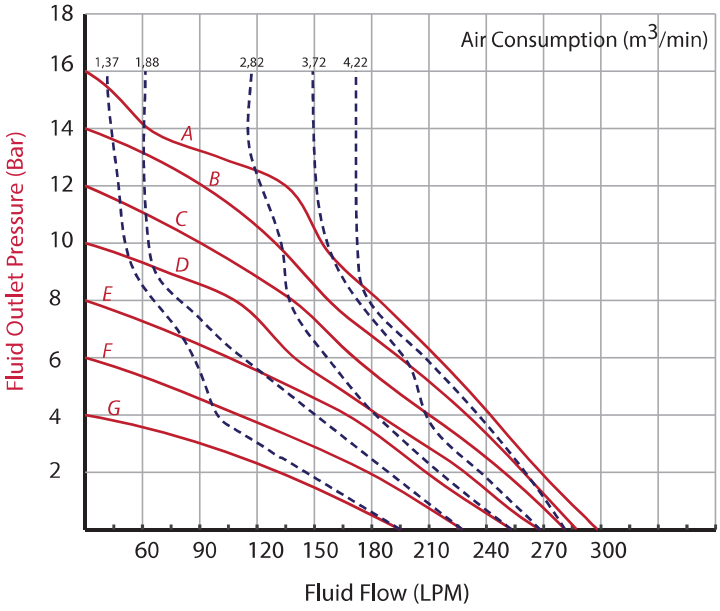

Test Conditions: All tests are made with using water and Santoprene diaphragm. Suction hose submerged in the fluid. Muffler not used. If using PTFE diaphragm, capacity decreases by 10%. All the values are shown are approximate and not binding.

Example: To pump 196 lpm against a discharge preasure of 6 bar, requires 7 bar and 3,72 m3/min air consumption.

Air Preasure :	
A	*8 bar*
B	*7 bar*
C	*6 bar*
D	*5 bar*
E	*4 bar*
F	*3 bar*
G	*2 bar*

Fluid Flow: ———
Air Consumption: - - - - -

Dimensions
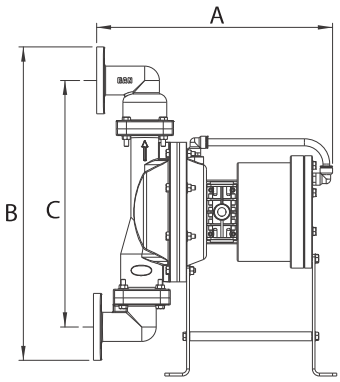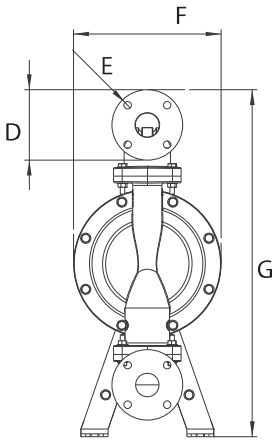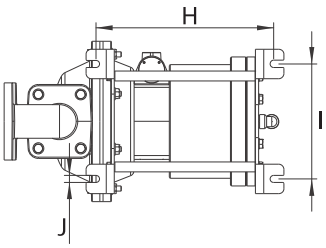
A	538
B	713
C	561
D	152
E	16
F	318
G	749
H	352
I	228
J	14