CRE, CRIE, CRNE

Vertical multistage centrifugal E-pumps

50/60 Hz

be
think
innovate

GRUNDFOS

Table of contents

1. Product introduction

TM02 7397 0511

Fig. 1 CRE, CRIE and CRNE pumps

The CRE, CRIE and CRNE pumps are based on the CR, CRI and CRN pumps.

CRE, CRIE and CRNE pumps belong to the so-called E-pump family and are referred to as E-pumps.

The difference between the CR and CRE pump ranges is the motor. CRE, CRIE and CRNE pumps are fitted with an E-motor, i.e. a motor with built-in frequency converter.

The E-pump motor is a Grundfos MGE motor designed to EN standards.

The built-in frequency converter enables continuously variable control of the motor speed. This means that the pump can be set to operation at any duty point. The purpose of continuously variable speed control of the motor speed is to adjust the performance to a given requirement.

CRE, CRIE and CRNE pumps are available with an integrated pressure sensor connected to the frequency converter.

The pump materials are identical to those of the CRI and CRN pump ranges.

Selecting an E-pump

Select an E-pump if the following is required:

- controlled operation, i.e. the consumption fluctuates
- constant pressure
- communication with the pump.

Adaptation of performance through frequency-controlled speed control offers obvious benefits, such as:

- energy savings
- increased comfort
- control and monitoring of the pump performance.

Performance range

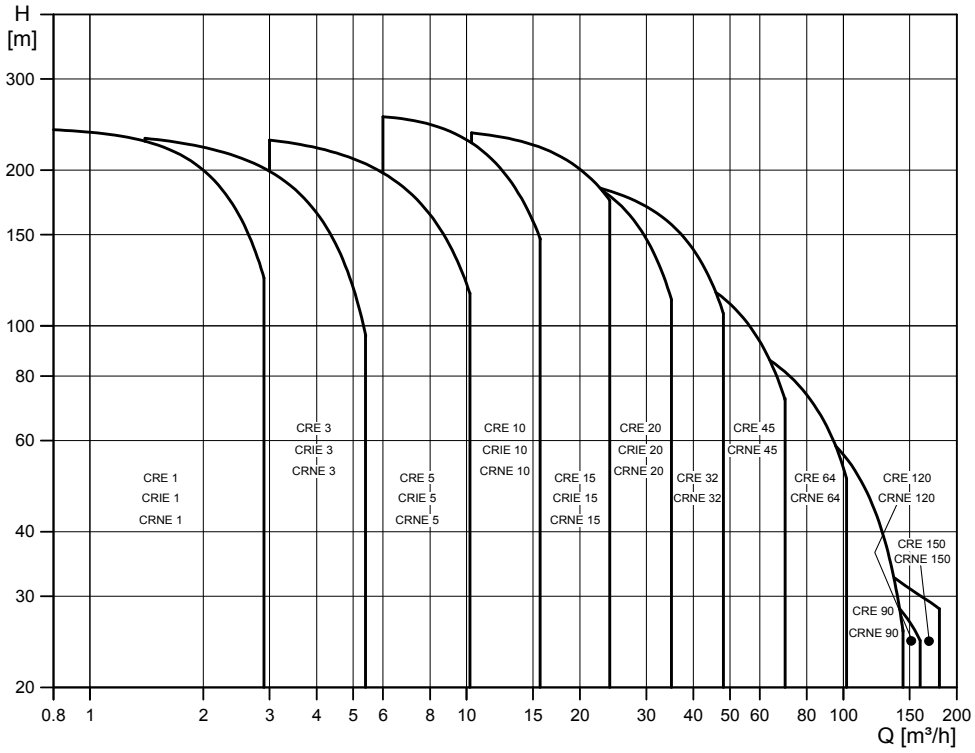

Fig. 2 Performance range, CRE, CRIE and CRNE

EuP ready

The CRE, CRIE, CRNE pumps are energy-optimised and comply with the EuP Directive (Commission Regulation (EC) No 547/2012) which has been effective since 1 January 2013. As from this date, all pumps will be classified/graduated in a new energy minimum efficiency index (MEI).

Minimum efficiency index

Minimum efficiency index (MEI) means the dimensionless scale unit for hydraulic pump efficiency at best efficiency point (BEP), part load (PL) and overload (OL). The Commission Regulation (EU) sets efficiency requirements to MEI ≥ 0.10 as from 1 January 2013 and MEI ≥ 0.40 as from 1 January 2015. An indicative benchmark for best-performing water pump available on the market as from 1 January 2013 is determined in the Commission Regulation.

- The benchmark for most efficient water pumps is MEI ≥ 0.70.
- The efficiency of a pump with a trimmed impeller is usually lower than that of a pump with the full impeller diameter. The trimming of the impeller will adapt the pump to a fixed duty point, leading to reduced energy consumption. The minimum efficiency index (MEI) is based on the full impeller diameter.
- The operation of this water pump with variable duty points may be more efficient and economic when controlled, for example, by the use of a variable-speed drive that matches the pump duty to the system.
- Information on benchmark efficiency is available at http://europump.eu/efficiencycharts.

Minimum efficiency index (MEI)

Pump type	MEI
CR 1-3	> 0.70
CR 3-3	> 0.70
CR 5-3	0.57
CR 10-3	> 0.70
CR 15-3	> 0.70
CR 20-3	> 0.70
CR 32-3	> 0.70
CR 45-3	> 0.70
CR 64-3	> 0.70
CR 90-3	> 0.70

Applications

Application
Water supply
Filtration and transfer at waterworks
Distribution from waterworks
Pressure boosting in mains
Pressure boosting in high-rise buildings, hotels, etc.
Pressure boosting for industrial water supply
Industry
Pressure boosting
Process water systems
Washing and cleaning systems
Vehicle-washing tunnels
Firefighting systems
Liquid transfer
Cooling and air-conditioning systems (refrigerants)
Boiler feed and condensate systems
Machine tools (cooling lubricants)
Aquafarming
Special transfer duties
Oils and alcohols
Acids and alkalis
Glycol and coolants
Water treatment
Ultrafiltration systems
Reverse osmosis systems
Softening, ionising, demineralising systems
Distillation systems
Separators
Swimming baths
Irrigation
Field irrigation (flooding)
Sprinkler irrigation
Drip-feed irrigation

For further information about which pump version to choose for a specific application or liquid, see section *9. Pumped liquids*, page 77.

Product range

Range	CRE 1	CRE 3	CRE 5	CRE 10	CRE 15	CRE 20
Rated flow rate [m^3/h]	1.2	3.6	6	12	18	24
Liquid temperature [°C]	-20 - +120					
Liquid temperature [°C], on request	-40 - +180					
Maximum pump efficiency [%]	49	59	67	70	72	72
CRE pumps						
Flow rate [m^3/h]	0.8 - 2.9	1.4 - 5.4	3 - 10.2	6-16	10-29	13-35
Maximum pressure [bar]	24	24	23	26	24	21
Motor power [kW]	0.37 - 3.0	0.37 - 4.0	0.55 - 7.5	0.75 - 11	1.5 - 18.5	2.2 - 18.5
Version						
CRE: Cast iron and stainless steel EN 1.4301/AISI 304	•	•	•	•	•	•
CRIE: Stainless steel EN 1.4301/AISI 304	•	•	•	•	•	•
CRNE: Stainless steel EN 1.4401/AISI 316	•	•	•	•	•	•
CRT, CRTE: Titanium	See the CRT, CRTE data booklet available on www.grundfos.com (WebCAPS).					
CRE pipe connection						
Oval flange (BSP)	Rp 1	Rp 1	Rp 1 1/4	Rp 1 1/2	Rp 2	Rp 2
Oval flange (BSP), on request	Rp 1 1/4	Rp 1 1/4	Rp 1	Rp 1 1/4 Rp 2	Rp 2 1/2	Rp 2 1/2
Flange	DN 25/ DN 32	DN 25/ DN 32	DN 25/ DN 32	DN 40	DN 50	DN 50
Flange, on request	-	-	-	DN 50	-	-
CRIE pipe connection						
Oval flange (BSP)	Rp 1	Rp 1 1/4	Rp 1 1/4	Rp 1 1/2	Rp 2	Rp 2
Oval flange (BSP), on request	Rp 1 1/4	Rp 1	Rp 1	Rp 2	-	-
Flange	DN 25/ DN 32	DN 25/ DN 32	DN 25/ DN 32	DN 40	DN 50	DN 50
Flange, on request	-	-	-	DN 50	-	-
PJE coupling (Victaulic)	R 1 1/4 DN 32	R 1 1/4 DN 32	R 1 1/4 DN 32	R 2 DN 50	R 2 DN 50	R 2 DN 50
Clamp coupling (L-coupling)	∅48.3	∅48.3	∅48.3	∅60.3	∅60.3	∅60.3
Union (+GF+)	G 2	G 2	G 2	G 2 3/4	G 2 3/4	G 2 3/4
CRNE pipe connection						
Oval flange (BSP)	Rp 1	Rp 1 1/4	Rp 1 1/4	Rp 1 1/2	Rp 2	Rp 2
Oval flange (BSP), on request	Rp 1 1/4	Rp 1	Rp 1	Rp 2	-	-
Flange	DN 25/ DN 32	DN 25/ DN 32	DN 25/ DN 32	DN 40	DN 50	DN 50
Flange, on request	-	-	-	DN 50	-	-
PJE coupling (Victaulic)	R 1 1/4 DN 32	R 1 1/4 DN 32	R 1 1/4 DN 32	R 2 DN 50	R 2 DN 50	R 2 DN 50
Clamp coupling (L-coupling)	∅42.2	∅42.2	∅42.2	∅60.3	∅60.3	∅60.3
Union (+GF+)	G 2	G 2	G 2	G 2 3/4	G 2 3/4	G 2 3/4

• Standard.

Range	CRE 32	CRE 45	CRE 64	CRE 90	CRE 120	CRE 150
Rated flow rate [m^3/h]	38	54	77	108	140	180
Liquid temperature [°C]	-30 - +120*				-30 - +120*	
Liquid temperature [°C], on request	-40 - +180				-	-
Maximum pump efficiency [%]	76	78	79	80	74	70
CRE pumps						
Flow rate [m^3/h]	18-48	26-70	36-102	54-146	60-160	75-180
Maximum pressure [bar]	27	26	18.2	16.5	4	5
Motor power [kW]	2.2 - 22	5.5 - 22	7.5 - 22	11-22	18.5	22
Version						
CRE: Cast iron and stainless steel EN 1.4301/AISI 304	●	●	●	●	●	●
CRIE: Stainless steel EN 1.4301/AISI 304	❍	❍	❍	❍	-	-
CRNE: Stainless steel EN 1.4401/AISI 316	●	●	●	●	●	●
CRT, CRTE: Titanium	See the CRT, CRTE data booklet available on www.grundfos.com (WebCAPS).				-	-
CRE pipe connection						
Oval flange (BSP)	-	-	-	-	-	-
Oval flange (BSP), on request	-	-	-	-	-	-
Flange	DN 65	DN 80	DN 100	DN 100	DN 125	DN 125
Flange, on request	DN 80	DN 100	DN 125	DN 125	DN 150	DN 150
CRIE pipe connection						
Oval flange (BSP)	-	-	-	-	-	-
Oval flange (BSP), on request	-	-	-	-	-	-
Flange	-	-	-	-	-	-
Flange, on request	-	-	-	-	-	-
PJE coupling (Victaulic)	-	-	-	-	-	-
Clamp coupling (L-coupling)	-	-	-	-	-	-
Union (+GF+)	-	-	-	-	-	-
CRNE pipe connection						
Oval flange (BSP)	-	-	-	-	-	-
Oval flange (BSP), on request	-	-	-	-	-	-
Flange	DN 65	DN 80	DN 100	DN 100	DN 125	DN 125
Flange, on request	DN 80	DN 100	DN 125	DN 125	DN 150	DN 150
PJE coupling (Victaulic)	3"	4"	4"	4"	4"	4"
Clamp coupling (L-coupling)	88.9	114.3	114.3	114.3	114.3	114.3
Union (+GF+)	-	-	-	-	-	-

● Standard.
❍ Available.
* CRNE 32 to 150 with HQQE shaft seal: -40 to +120 °C.

Pump

The CR and CRE pumps are non-self-priming, vertical multistage centrifugal pumps.

The pumps are available with a Grundfos standard motor (CR pumps) or a Grundfos frequency-controlled motor (CRE pumps).

The pump consists of a pump head and a base. The chamber stack and the sleeve are secured between the pump head and the base by means of staybolts. The base has suction and discharge ports on the same level (in line). All pumps are fitted with a maintenance-free mechanical shaft seal of the cartridge type.

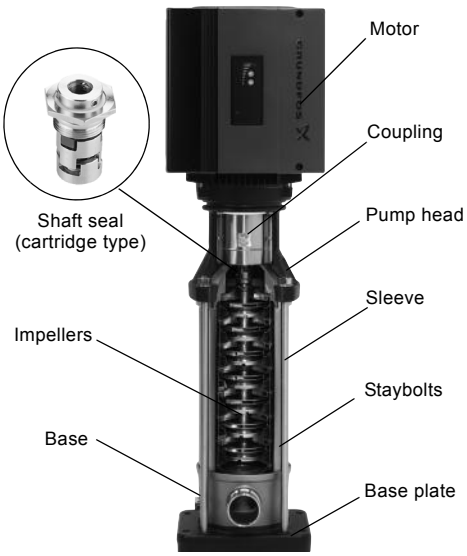

Fig. 3 CR pump

Motor

MGE motors

MGE motors incorporate thermal protection against slow overload and blocking (IEC 34-11: TP 211).

CRE, CRIE and CRNE pumps require no external motor protection.

Grundfos blueflux®

Grundfos blueflux® technology represents the best from Grundfos within energy-efficient motors and frequency converters. Grundfos blueflux® solutions either meet or exceed legislative requirements, such as the EuP IE3 and IE4 grades.

TM04 9901 0814

Fig. 4 Grundfos blueflux® label

To read more about the energy challenge and Grundfos blueflux®, please visit grundfos.com/energy

Frequency-controlled MGE motors

CRE, CRIE and CRNE pumps are fitted with a totally enclosed, fan-cooled, frequency-controlled MGE motor with principal dimensions to EN standards.

Electrical tolerances comply with EN 60034.

CRE, CRIE, CRNE pumps from 0.37 to 1.1 kW are fitted with single-phase MGE motors as standard. The 1.5 kW single-phase MGE motors are available on request.

CRE, CRIE, CRNE pumps from 1.5 to 22 kW are fitted with three-phase MGE motors as standard. The 0.37 to 1.1 kW three-phase MGE motors are available on request.

See WinCAPS or WebCAPS on www.grundfos.com.

Electrical data

	MGE motor CRE, CRIE, CRNE
Mounting designation	Up to 4 kW: V18 5.5 kW and up: V1
Insulation class	F
Efficiency class	0.75 to 2.2 kW: above IE4 level 3 to 22 kW: IE3
	0.37 and 0.55 kW motors are not covered by the IE classification.
Enclosure class	0.37 to 2.2 kW: IP55 (IP66 optional) 3-22 kW: IP55
Supply voltage Tolerance: - 10 %/+ 10 %	P2: 0.37 - 1.5 kW: 1 x 200-240 V P2: 0.37 - 2.2 kW: 3 x 380-500 V P2: 3-22 kW: 3 x 380-480 V
Supply frequency	50/60 Hz

Optional motors

The Grundfos standard range of motors meets a wide variety of system requirements.

For special applications or operating conditions, we offer custom-built motors, such as:

- ATEX-approved motors
- MG motors with anti-condensation heating unit
- motors with thermal protection.

MGE 0.37 to 2.2 kW

Advanced functional module (FM 300)

The FM 300 is the standard functional module in all MGE motors from 0.37 to 2.2 kW.

The module has a number of inputs and outputs enabling the motor to be used in advanced applications where many inputs and outputs are required.

The FM 300 has these connections:

- three analog inputs
- one analog output
- two dedicated digital inputs
- two configurable digital inputs or open-collector outputs
- Grundfos Digital Sensor input and output
- two Pt100/1000 inputs
- two LiqTec sensor inputs
- two signal relay outputs
- GENIbus connection.

Connection terminals

CRE, CRIE, CRNE pumps have a number of inputs and outputs enabling the pumps to be used in advanced applications where many inputs and outputs are required.

The number of available inputs and outputs depends on the selected functional module. Functional module 300 has been selected as standard for CRE, CRIE and CRNE pumps.

See fig. 5.

As a precaution, the wires to be connected to the following connection groups must be separated from each other by reinforced insulation in their entire lengths.

- **Inputs and outputs**
  All inputs and outputs are internally separated from the mains-conducting parts by reinforced insulation and galvanically separated from other circuits.
  All control terminals are supplied by safety extra-low voltage (SELV), thus ensuring protection against electric shock.
- **Signal relay outputs**
  – Signal relay 1:
    LIVE:
    Mains supply voltages up to 250 VAC can be connected to this output.
    SELV:
    The output is galvanically separated from other circuits. Therefore, the supply voltage or safety extra-low voltage can be connected to the output as desired.
  – Signal relay 2:
    SELV:
    The output is galvanically separated from other circuits. Therefore, the supply voltage or safety extra-low voltage can be connected to the output as desired.
- **Mains supply** (terminals N, PE, L or L1, L2, L3, PE)

A galvanically safe separation must fulfil the requirements for reinforced insulation including creepage distances and clearances specified in EN 61800-5-1.

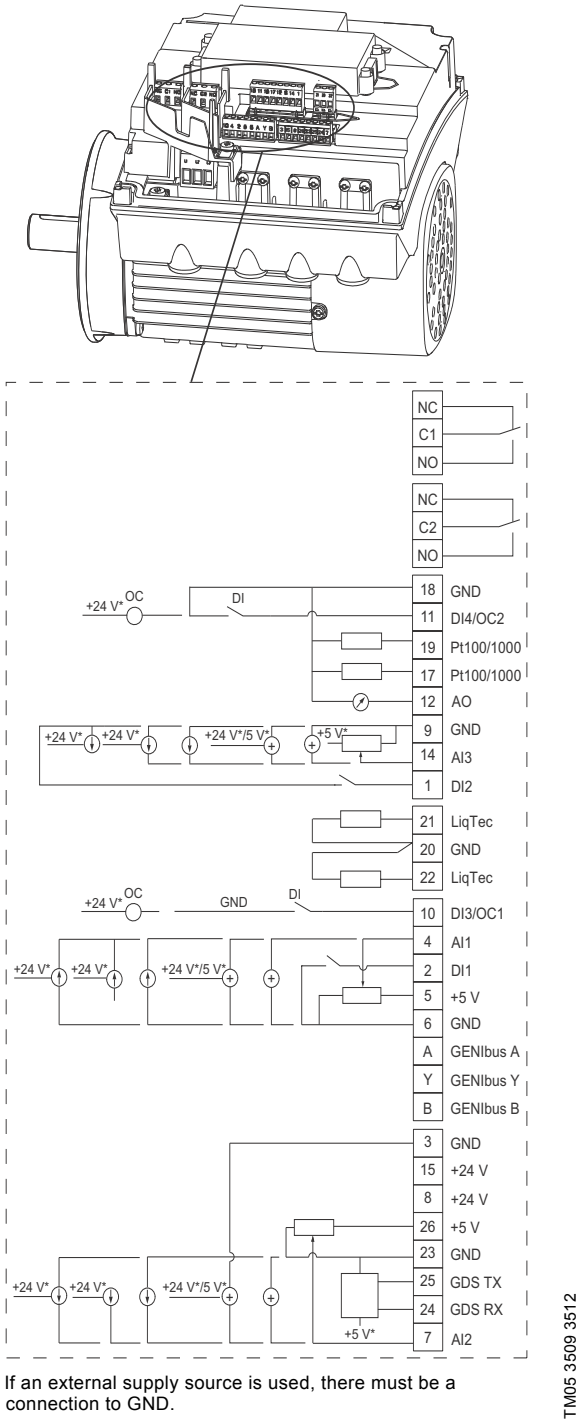

* If an external supply source is used, there must be a connection to GND.

Fig. 5 Connection terminals, FM 300 functional module

MGE 3 to 7.5 kW

Advanced I/O module

The Advanced I/O module is the standard functional module in all MGE motors from 3 to 7.5 kW.

The module has a number of inputs and outputs enabling the motor to be used in advanced applications where many inputs and outputs are required.

The Advanced I/O module has these connections:

- start/stop terminals
- three digital inputs
- one setpoint input
- one sensor input
- one analog output
- GENIbus connection.

Connection terminals

As a precaution, the wires to be connected to the following connection groups must be separated from each other by reinforced insulation in their entire lengths.

Inputs

- Start/stop (terminals 2 and 3)
- digital inputs (terminals 1 and 9, 10 and 9, 11 and 9)
- setpoint input (terminals 4, 5 and 6)
- sensor input (terminals 7 and 8)
- GENIbus (terminals B, Y and A).

All inputs are internally separated from the mains-conducting parts by reinforced insulation and galvanically separated from other circuits.

All control terminals are supplied with protective extra-low voltage (PELV), thus ensuring protection against electric shock.

Output (relay signal, terminals NC, C, NO)

The output is galvanically separated from other circuits.

Therefore, the supply voltage or protective extra-low voltage can be connected to the output as desired.

- analog output (terminal 12 and 13).

Mains supply (terminals L1, L2, L3)

A galvanic separation must fulfil the requirements for reinforced insulation including creepage distances and clearances specified in EN 60335.

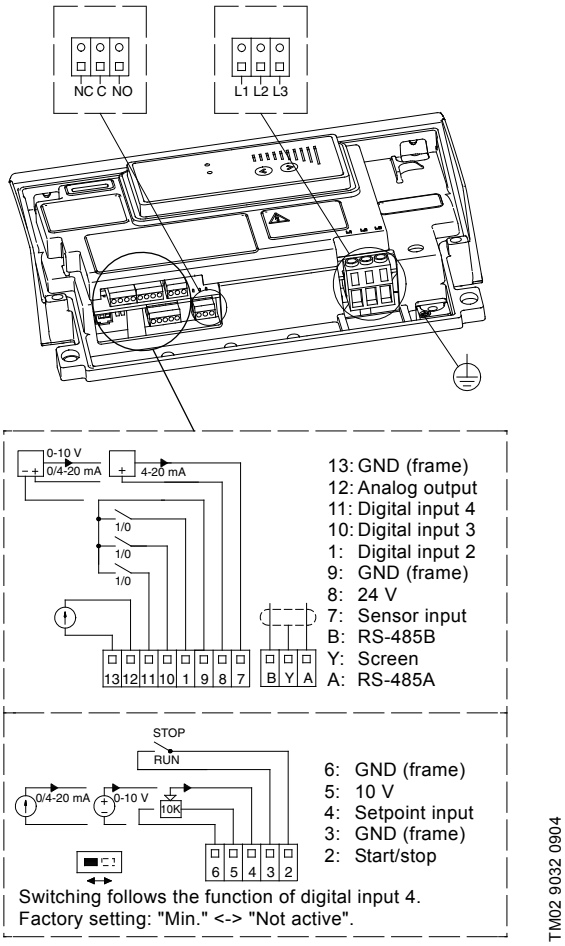

Fig. 6 Connection terminals, Advanced I/O module

MGE 11 to 22 kW

Advanced I/O module

The advanced I/O module is the standard functional module in all MGE motors from 11 to 22 kW.

The module has a number of inputs and outputs enabling the motor to be used in advanced applications where many inputs and outputs are required.

The Advanced I/O module has these connections:

- start/stop terminals
- three digital inputs
- one setpoint input
- one sensor input (feedback sensor)
- one sensor 2 input
- one analog output
- two Pt100 inputs
- two signal relay outputs
- GENIbus connection.

Connection terminals

As a precaution, the wires to be connected to the following connection groups must be separated from each other by reinforced insulation in their entire lengths.

Inputs

- Start/stop (terminals 2 and 3)
- digital inputs (terminals 1 and 9, 10 and 9, 11 and 9)
- sensor input 2 (terminals 14 and 15)
- Pt100 sensor inputs (terminals 17, 18, 19 and 20)
- setpoint input (terminals 4, 5 and 6)
- sensor input (terminals 7 and 8)
- GENIbus (terminals B, Y and A).

All inputs are internally separated from the mains-conducting parts by reinforced insulation and galvanically separated from other circuits.

All control terminals are supplied with protective extra-low voltage (PELV), thus ensuring protection against electric shock.

Output (relay signal, terminals NC, C, NO)

The output is galvanically separated from other circuits.

Therefore, the supply voltage or protective extra-low voltage can be connected to the output as desired.

- analog output (terminal 12 and 13).

Mains supply (terminals L1, L2, L3)

A galvanic separation must fulfil the requirements for reinforced insulation including creepage distances and clearances specified in EN 61800-5-1.

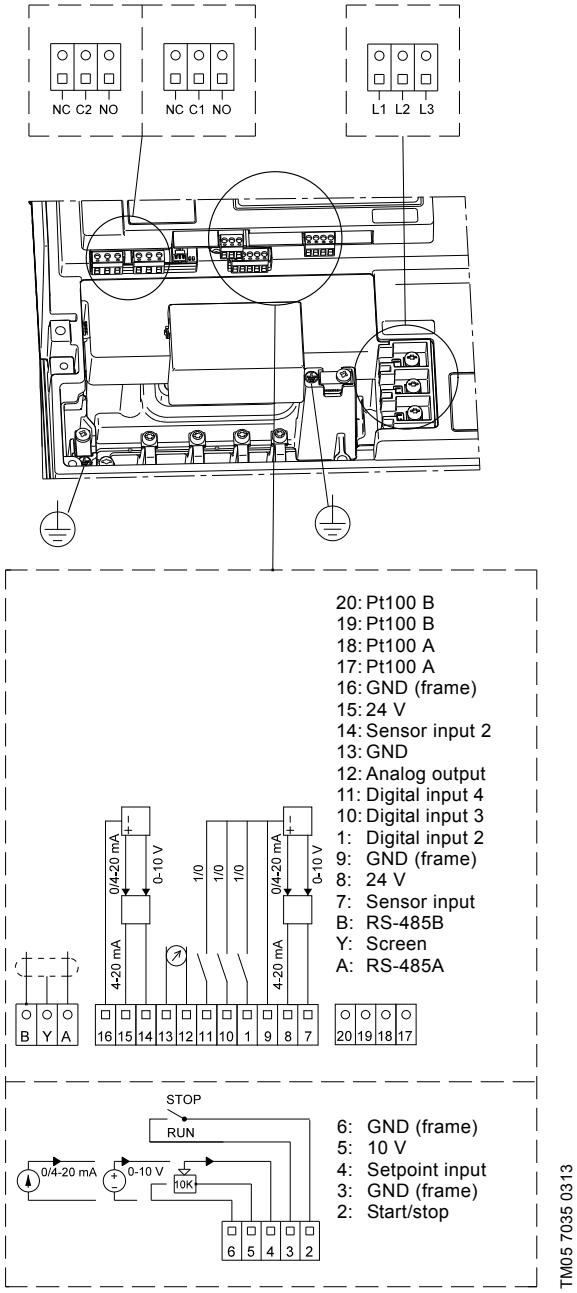

Fig. 7 Connection terminals, Advanced I/O module

Terminal box positions

As standard, the terminal box is fitted on the suction side of the pump.

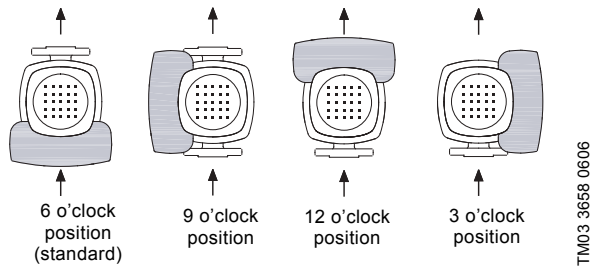

Fig. 8 Terminal box positions

Ambient temperature

Motor power [kW]	Motor make	Phase	Motor efficiency class	Maximum ambient temperature [°C]	Maximum altitude above sea level [m]
0.37 - 1.5	MGE	1	-*	50	1,000
0.37 - 2.2	MGE	3	-*	50	
3-22	MGE	3	IE3	40	

* Even though the MGE motor (0.37 to 2.2 kW) has no defined efficiency class, the efficiency is still above the IE4 level including both motor and electronics.

If the ambient temperature exceeds the above maximum ambient temperatures or the pump is installed at an altitude exceeding 1,000 metres, the motor must not be fully loaded due to the risk of overheating. Overheating may result from excessive ambient temperatures or the low density and consequently low cooling effect of the air.

In such cases, it may be necessary to use a motor with a higher rated output.

Viscosity

The pumping of liquids with densities or kinematic viscosities higher than those of water will cause a considerable pressure drop, a drop in the hydraulic performance and a rise in the power consumption.

In such situations, the pump should be fitted with a larger motor. If in doubt, contact Grundfos.

Installation altitude

Installation altitude is the height above sea level of the installation site. Motors installed up to 1,000 metres above sea level can be loaded 100 %.

Motors installed more than 1,000 metres above sea level must not be fully loaded due to the low density and consequently low cooling effect of the air.

MGE 0.37 to 2.2 kW

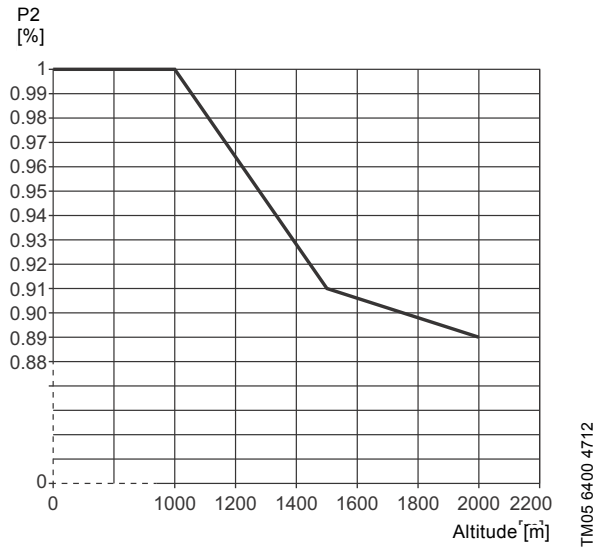

Fig. 9 Derating of motor output (P2) in relation to altitude above sea level

MGE 3 to 22 kW

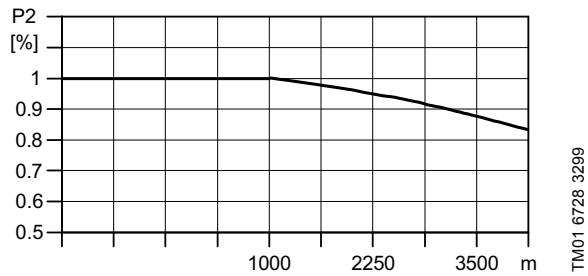

Fig. 10 Derating of motor output (P2) in relation to altitude above sea level

2. Control of E-pumps

Examples of E-pump applications

CRE, CRIE and CRNE pumps are the ideal choice for a number of applications characterised by a demand for variable flow at constant pressure. The pumps are suited for water supply systems and pressure boosting as well as for industrial applications.

Depending on the application, the pumps offer energy savings, increased comfort and improved processing.

E-pumps in the service of industry

The industry uses a large number of pumps in many different applications. Demands on pumps in terms of pump performance and mode of operation make speed control a must in many applications.

Some of the applications in which E-pumps are often used are listed below.

Constant pressure

- Water supply
- washing and cleaning systems
- distribution from waterworks
- humidifying systems
- water treatment systems
- process boosting systems, etc.

Example: Within industrial water supply, E-pumps with integrated pressure sensor are used to ensure a constant pressure in the piping system. From the sensor, the E-pump receives inputs about changes of pressure as a result of changes in the consumption. The E-pump responds to the input by adjusting the speed until the pressure is equalised. The constant pressure is stabilised once more on the basis of a preset setpoint.

Constant temperature

- Air-conditioning systems at industrial plants
- industrial cooling systems
- industrial freezing systems
- casting and moulding tools, etc.

Example: In industrial freezing systems, E-pumps with temperature sensor increase comfort and lower operating costs compared with pumps without a temperature sensor.

An E-pump continuously adapts its performance to the changing demands reflected in the differences in temperature of the liquid circulating in the freezing system. Thus, the lower the demand for cooling, the smaller the quantity of liquid circulated in the system and vice versa.

Constant level

- Boiler feed systems
- condensate systems
- sprinkler irrigation systems
- chemical industry, etc.

Example: In a steam boiler, it is important to be able to monitor and control pump operation to maintain a constant level of water in the boiler.

By using an E-pump with level sensor in the boiler, it is possible to maintain a constant water level.

A constant water level ensures optimum and cost-efficient operation as a result of a stable steam production.

Dosing applications

- Chemical industry, i.e. control of pH values
- petrochemical industry
- paint industry
- degreasing systems
- bleaching systems, etc.

Example: In the petrochemical industry, E-pumps with pressure sensor are used as dosing pumps.
The E-pumps help to ensure that the correct mixture ratio is achieved when more liquids are combined.

E-pumps functioning as dosing pumps improve processing and offer energy savings.

E-pumps in commercial building services

Commercial building services use E-pumps to maintain a constant pressure or a constant temperature based on a variable flow.

Constant pressure

Water supply in high-rise buildings, such as office buildings and hotels.

Example: E-pumps with pressure sensor are used for water supply in high-rise buildings to ensure a constant pressure even at the highest draw-off point. As the consumption pattern and thus the pressure changes during the day, the E-pump continuously adapts its performance until the pressure is equalised.

Constant temperature

- Air-conditioning systems in hotels, schools, etc.
- building cooling systems, etc.

Example: E-pumps are an excellent choice for buildings where a constant temperature is essential. E-pumps keep the temperature constant in air-conditioned, high-rise glass buildings, irrespective of the seasonal fluctuations of the outdoor temperature and various heat impacts inside the building.

Control options

It is possible to communicate with CRE, CRIE, CRNE pumps via the following:

- control panel on the pump
- Grundfos R100 remote control
- Grundfos GO Remote
- central management system.

The purpose of controlling an E-pump is to monitor and control the pressure, temperature, flow and liquid level of the system.

Control panel on pump

The control panel on the E-pump terminal box makes it possible to change the setpoint settings manually.

MGE 0.37 to 2.2 kW

The operating condition of the pump is indicated by the Grundfos Eye on the control panel. See fig. 11, pos. A.

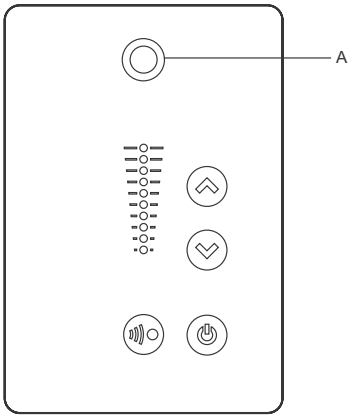

TM05 5993 4312

Fig. 11 Control panel on CRE pump, 0.37 to 2.2 kW

MGE 3 to 22 kW

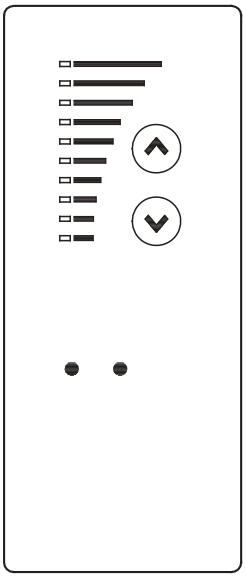

TM02 8513 0304

Fig. 12 Control panel on CRE pump, 3 to 22 kW

Grundfos GO Remote

The pump is designed for wireless radio or infrared communication with the Grundfos GO Remote.

The Grundfos GO Remote enables setting of functions and gives access to status overviews, technical product information and actual operating parameters.

The Grundfos GO Remote offers the following mobile interfaces (MI). See fig. 13.

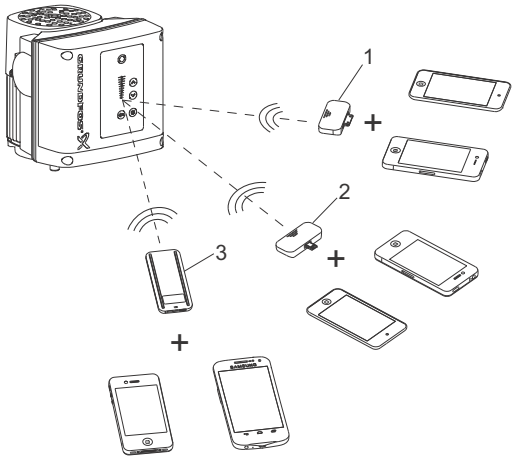

TM06 0744 0914

Fig. 13 Grundfos GO Remote communicating with the pump via radio or infrared connection (IR)

Pos.	Description
1	Grundfos MI 202: Add-on module which can be used in conjunction with an Apple iPhone or iPod with 30-pin connector and iOS 5.0 or later, e.g. fourth generation iPhone or iPod.
2	Grundfos MI 204: Add-on module which can be used in conjunction with an Apple iPhone or iPod with Lightning connector, e.g. fifth generation iPhone or iPod. (The MI 204 is also available together with an Apple iPod touch and a cover.)
3	Grundfos MI 301: Separate module enabling radio or infrared communication. The module can be used in conjunction with an Android or iOS-based smart device with Bluetooth connection.

Central management system

Communication with the E-pump is possible even if the operator is not present near the E-pump. Communication is enabled by connecting the E-pump to a central management system. This allows the operator to monitor the pump and to change control modes and setpoint settings.

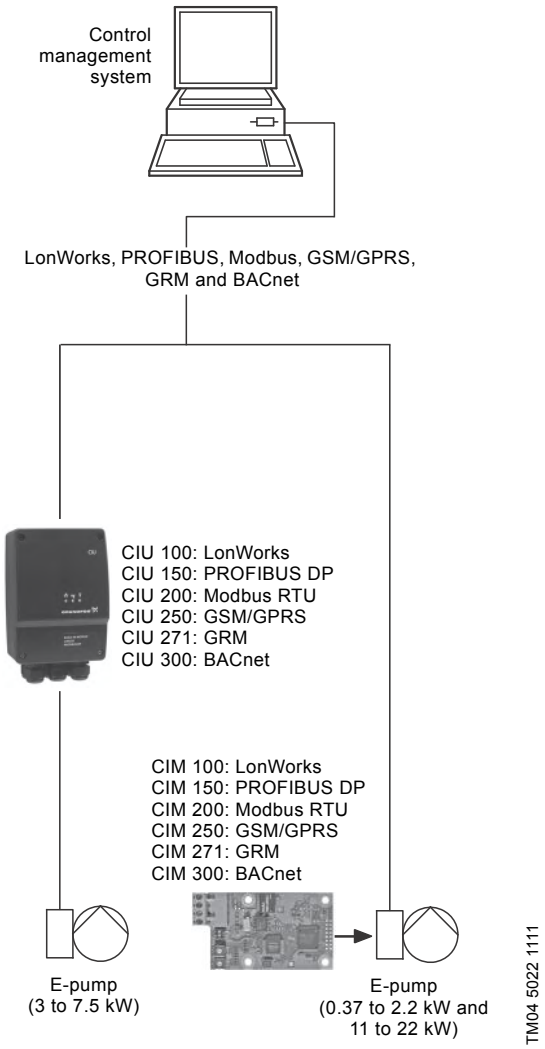

Fig. 14 Structure of a central management system

Control modes for E-pumps

CRE, CRIE and CRNE pumps are available in two variants:

- CRE, CRIE and CRNE with integrated pressure sensor
- CRE, CRIE and CRNE without sensor.

CRE, CRIE and CRNE with integrated pressure sensor

Use CRE, CRIE and CRNE pumps with integrated pressure sensor in applications where you want to control the pressure after the pump, irrespective of the flow. For further information, see *Examples of E-pump applications*, page 13.

Signals of pressure changes in the piping system are transmitted continuously from the sensor to the pump. The pump responds to the signals by adjusting its performance up or down to compensate for the pressure difference between the actual and the desired pressure. As this adjustment is a continuous process, a constant pressure is maintained in the piping system.

Fig. 15 CRE, CRIE and CRNE pumps

A CRE, CRIE or CRNE pump with integrated pressure sensor facilitates installation and commissioning.

CRE, CRIE and CRNE pumps with integrated pressure sensor can be set to either of these control modes:

- constant pressure (factory setting)
- constant curve.

In constant-pressure mode, the pump maintains a preset pressure after the pump, irrespective of the flow. See fig. 16.

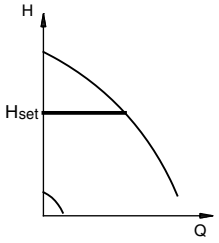

TM00 9322 4796

Fig. 16 Constant-pressure mode

In constant-curve mode, the pump is not controlled. It can be set to pump according to a preset pump characteristic within the range from min. curve to max. curve. See fig. 17.

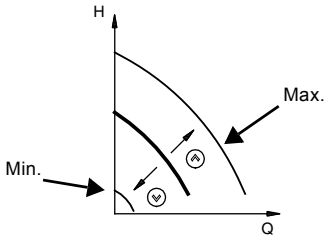

TM00 9323 1204

Fig. 17 Constant-curve mode

CRE, CRIE and CRNE without sensor

CRE, CRIE and CRNE pumps without sensor are suitable in these situations:

- Uncontrolled operation is required.
- You want to retrofit another sensor in order to control the flow, temperature, differential temperature, liquid level, pH value, etc. at some arbitrary point in the system.

MGE 0.37 to 2.2 kW

These CRE, CRIE and CRNE pumps without sensor can be set to either of these control modes:

- constant pressure
- constant differential pressure
- constant temperature
- constant differential temperature
- constant flow rate
- constant level
- constant curve
- constant other value.

MGE 3 to 22 kW

These CRE, CRIE and CRNE pumps without sensor can be set to either of these control modes:

- controlled operation
- uncontrolled operation (factory setting).

In controlled-operation mode, the pump adjusts its performance to the desired setpoint. See fig. 18.

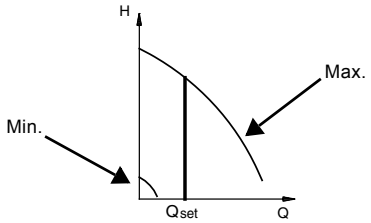

TM02 7264 2803

Fig. 18 Constant-flow mode

In uncontrolled-operation mode, the pump operates according to the constant curve set. See fig. 19.

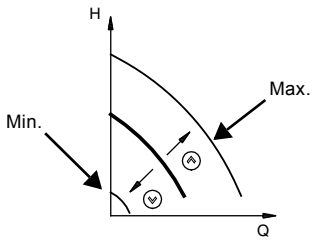

TM00 9323 1204

Fig. 19 Constant-curve mode

CRE, CRIE and CRNE pumps can be fitted with sensor types meeting the requirements mentioned in the "Grundfos E-pumps" data booklet available on www.grundfos.com (WebCAPS).

3. Construction

CRE 1, 3, 5, 10, 15 and 20

TM02 1198 0601 - GR7377 - GR7379

Sectional drawing

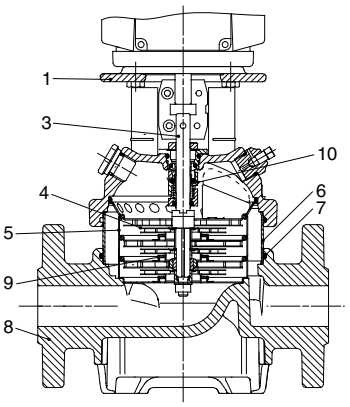

TM02 1194 1403

Materials, CRE

Pos.	Designation	Material	EN/DIN	AISI/ASTM
1	Pump head	Cast iron EN-GJL-200	EN-JL1030	ASTM 25B
3	Shaft	Stainless steel	1.4401[1)] 1.4057[2)]	AISI 316 AISI 431
4	Impeller	Stainless steel	1.4301	AISI 304
5	Chamber	Stainless steel	1.4301	AISI 304
6	Sleeve	Stainless steel	1.4301	AISI 304
7	O-ring for sleeve	EPDM or FKM	-	-
8	Base	Cast iron EN-GJL-200	EN-JL1030	ASTM 25B
9	Neck ring	PTFE	-	-
10	Shaft seal		-	-
	Rubber parts	EPDM or FKM	-	-

1) CRE 1, 3, 5.
2) CRE 10, 15, 20.

CRIE, CRNE 1, 3, 5, 10, 15 and 20

TM02 1808 2001 - GR7373 - GR7375

Sectional drawing

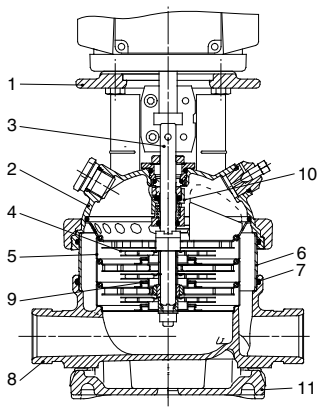

TM02 1195 1403

Materials, CRIE and CRNE

Pos.	Designation	Material	EN/DIN	AISI/ASTM
1	Pump head	Cast iron EN-GJL-200[1)]	EN-JL1030	ASTM 25B
2	Pump head cover	Stainless steel	1.4408	CF 8M equal to AISI 316
3	Shaft	Stainless steel	1.4401[2)] 1.4460[3)] 1.4057[4)]	AISI 316 AISI 329
8	Base	Stainless steel	1.4408	CF 8M equal to AISI 316
9	Neck ring	PTFE	-	-
10	Shaft seal	Cartridge type	-	-
11	Base plate	Cast iron EN-GJL-200[1)]	EN-JL1030	ASTM 25B
	Rubber parts	EPDM or FKM	-	-
		CRIE		
4	Impeller	Stainless steel	1.4301	AISI 304
5	Chamber	Stainless steel	1.4301	AISI 304
6	Sleeve	Stainless steel	1.4301	AISI 304
7	O-ring for sleeve	EPDM or FKM	-	-
		CRNE		
4	Impeller	Stainless steel	1.4401	AISI 316
5	Chamber	Stainless steel	1.4401	AISI 316
6	Sleeve	Stainless steel	1.4401	AISI 316
7	O-ring for sleeve	EPDM or FKM	-	-

1) Stainless steel available on request.
2) CRIE, CRNE 1, 3, 5.
3) CRNE.
4) CRIE 10, 15, 20.

CRE 32, 45, 64 and 90

TM01 2150 1298 - GrA4355

Sectional drawing

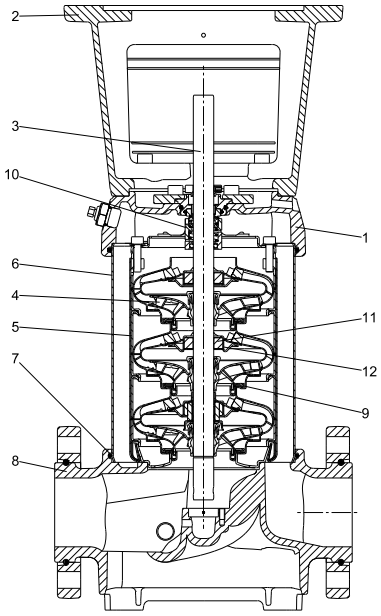

TM06 0711 0814

Materials, CRE

Pos.	Designation	Materials	EN/DIN	AISI/ASTM
1	Pump head	Cast iron EN-GJS-500-7	EN-JS1050	ASTM 80-55-06
2	Motor stool	Cast iron EN-GJL-200	EN-JL1030	ASTM 25B
3	Shaft	Stainless steel	1.4057	AISI 431
4	Impeller	Stainless steel	1.4301	AISI 304
5	Chamber	Stainless steel	1.4301	AISI 304
6	Sleeve	Stainless steel	1.4301	AISI 304
7	O-ring for sleeve	EPDM or FKM		
8	Base	Cast iron EN-GJS-500-7	EN-JS1050	ASTM 80-55-06
9	Neck ring	Carbon-graphite-filled PTFE		
10	Shaft seal			
11	Bearing ring	SiC/SiC		
12	Support bearing	Carbon-graphite-filled PTFE		
	Rubber parts	EPDM or FKM		

CRNE 32, 45, 64 and 90

TM02 7399 3403

Sectional drawing

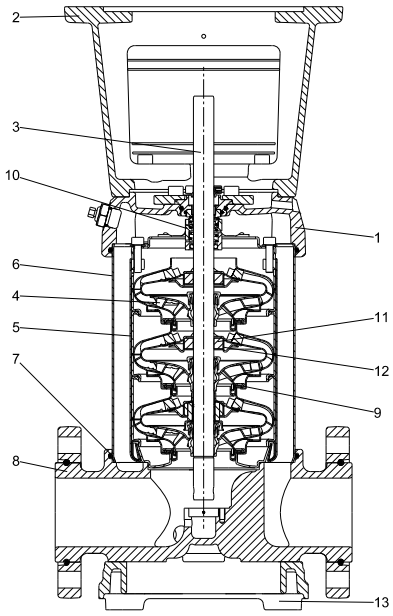

TM06 0712 0814

Materials, CRNE

Pos.	Designation	Materials	EN/DIN	AISI/ASTM
1	Pump head	Stainless steel	1.4408	CF 8M equal to AISI 316
2	Motor stool	Cast iron EN-GJL-200[1)]	EN-JL1030	ASTM 25B
3	Shaft	Stainless steel	1.4462	
4	Impeller	Stainless steel	1.4401	AISI 316
5	Chamber	Stainless steel	1.4401	AISI 316
6	Sleeve	Stainless steel	1.4401	AISI 316
7	O-ring for sleeve	EPDM or FKM		
8	Base	Stainless steel	1.4408	CF 8M equal to AISI 316
9	Neck ring	Carbon-graphite-filled PTFE		
10	Shaft seal			
11	Bearing ring	SiC/SiC		
12	Support bearing	Carbon-graphite-filled PTFE		
13	Base plate	Cast iron EN-GJS-500-7[1)]	EN-JS1050	ASTM 88-55-06
	Rubber parts	EPDM or FKM		

[1)] Stainless steel available on request.

CRE 120 and 150

GrA3731

Sectional drawing

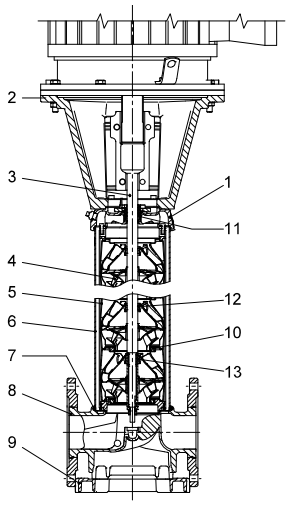

TM03 8835 2607

Materials, CRE

Pos.	Designation	Materials	EN/DIN	AISI/ASTM
1	Pump head	Cast iron EN-GJS-500-7	EN-JS1050	A 536 65-45-12
2	Motor stool (11-45 kW)	Cast iron EN-GJL-200	EN-JL1030	A48-30 B
	Motor stool (55-75 kW)	Cast iron EN-GJS-500-7	EN-JS1050	A 536 65-45-12
3	Shaft	Stainless steel	1.4057	AISI 431
4	Impeller	Stainless steel	1.4301	AISI 304
5	Chamber	Stainless steel	1.4301	AISI 304
6	Sleeve	Stainless steel	1.4401	AISI 316
7	O-ring for sleeve	EPDM or FKM		
8	Base	Cast iron EN-GJS-500-7	EN-JS1050	A 536 65-45-12
9	Base plate	Cast iron EN-GJS-500-7	EN-JS1050	A 536 65-45-12
10	Neck ring	Carbon-graphite-filled PTFE		
11	Shaft seal[1)]	SiC/SiC (∅22) Carbon/SiC (∅32)		
12	Support bearing	Carbon-graphite-filled PTFE		
13	Bearing ring	SiC/SiC		
	Rubber parts	EPDM or FKM		

1) ∅22 mm shaft, 11-45 kW.
∅32 mm shaft, 55-75 kW.

CRNE 120 and 150

GrA3732 - GrA3735

Sectional drawing

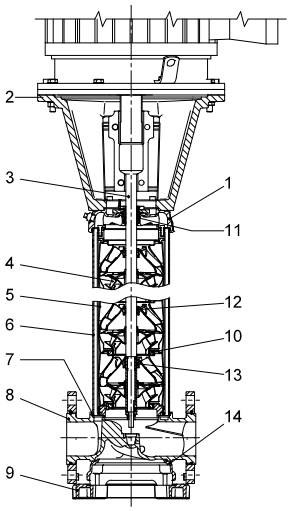

TM03 8836 2607

Materials, CRNE

Pos.	Designation	Materials	EN/DIN	AISI/ASTM
1	Pump head	Stainless steel	1.4408	A 351 CF 8M
2	Motor stool (11-45 kW)	Cast iron EN-GJL-200	EN-JL1030	A48-30 B
	Motor stool (55-75 kW)	Cast iron EN-GJS-500-7	EN-JS1050	A 536 65-45-12
3	Shaft	Stainless steel	1.4462	SAF 2205
4	Impeller	Stainless steel	1.4401	AISI 316
5	Chamber	Stainless steel	1.4401	AISI 316
6	Sleeve	Stainless steel	1.4401	AISI 316
7	O-ring for sleeve	EPDM or FKM		
8	Base	Stainless steel	1.4408	A 351 CF 8M
9	Base plate	Cast iron EN-GJS-500-7[1)]	EN-JS1050	A 536 65-45-12
10	Neck ring	Carbon-graphite-filled PTFE		
11	Shaft seal[2)]	SiC/SiC (∅22) Carbon/SiC (∅32)		
12	Support bearing	Carbon-graphite-filled PTFE		
13	Bearing ring	SiC/SiC		
14	Base plate	Cast iron EN-GJS-500-7[1)]	EN-JS1050	A 536 65-45-12
	Rubber parts	EPDM or FKM		

1) Stainless steel available on request.
2) ∅22 mm shaft, 11-45 kW.
∅32 mm shaft, 55-75 kW.

4. Type key

Pump

Example	CR	E	32	s	-4	-2	-A	-F	-G	-E	-HQQE

- Type range: CR, CRI, CRN, CRT
- Pump with integrated frequency converter
- Flow rate [m^3/h]
- Undersize impeller (all impellers) CR 1s, CRI 1s, CRN 1s
- Number of impellers
- Number of reduced-diameter impellers CR(E), CRN(E) 32, 45, 64, 90, 120, 150
- Code for pump version
- Code for pipe connection
- Code for materials
- Code for rubber parts
- Code for shaft seal

Key to codes

Code	Description
Pump version	
A	Basic version
B	Oversize motor
D	Pump with pressure intensifier*
DW	Deep-well pump with ejector*
E	Pump with certificate or ATEX approval
F	Pump for high temperatures (with air-cooled top)
G	Multi-E slave*
H	Horizontal version
HS	High-pressure pump with high-speed MGE motor*
I	Different pressure rating
J	Pump with a different maximum speed
K	Pump with low NPSH
M	Magnetic drive
N	With sensor
P	Undersize motor
R	Horizontal version with bearing bracket
SF	High-pressure pump
V	Multi-E master*
X	Special version
Pipe connection	
A	Oval flange
B	NPT thread
CA	FlexiClamp
CX	Triclamp*
F	DIN flange
G	ANSI flange
J	JIS flange
N	Changed diameter of ports
P	PJE coupling
X	Special version
Materials	
A	Basic version
AD	Carbon-graphite-filled PTFE (bearings)
G	Wetted parts EN 1.4401/AISI 316
GI	All parts stainless steel, wetted parts EN 1.4401/AISI 316
I	Wetted parts EN 1.4301/AISI 304
II	All parts stainless steel, wetted parts EN 1.4301/AISI 304
K	Bronze (bearings)
S	SiC bearings + PTFE neck rings
X	Special version
SX	Carbon free

Code	Description
Code for rubber parts in pump	
E	EPDM
F	FXM (Fluoraz®)
K	FFKM (Kalrez®)
V	FKM (Viton®)
Shaft seal type designation	
A	O-ring seal with fixed driver*
D	Balanced O-ring seal*
H	Balanced cartridge seal with O-ring
K	Type M as cartridge seal*
O	Double seal, back-to-back*
P	Double seal, tandem*
X	Special version*
Seal face material	
B	Carbon, synthetic resin-impregnated
C	Other types of carbon*
H	Cemented tungsten carbide, embedded (hybrid)*
U	Cemented tungsten carbide
Q	Silicon carbide
X	Other ceramics*
Secondary seal material (rubber parts)	
E	EPDM
F	FXM (Fluoraz®)
K	FFKM (Kalrez®)
V	FKM (Viton®)

* Option. See the CR "Custom-built pumps" data booklet available on www.grundfos.com (WebCAPS).

Shaft seal

Example	-H	-Q	-Q	-E

- Shaft seal type designation
- Material of rotating seal face
- Material of stationary seal face
- Material of secondary seal (rubber parts)

5. Operating and inlet pressures

Maximum operating pressure and liquid temperature

Pump type	Oval flange		PJE, clamp, union, DIN	
	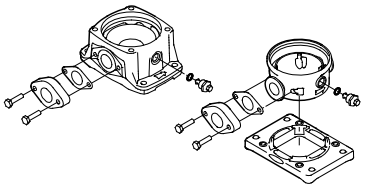 TM02 1379 1101		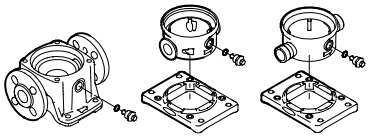 TM02 1383 1101	
	Maximum permissible operating pressure [bar]	Liquid temperature [°C]	Maximum permissible operating pressure [bar]	Liquid temperature [°C]
CRE, CRIE, CRNE 1	16	-20 - +120	25	-20 - +120
CRE, CRIE, CRNE 3	16		25	
CRE, CRIE, CRNE 5	16		25	
CRE, CRIE 10-1 → 10-10	16		16	
CRE, CRIE 10-12 → 10-17	-	-	25	
CRNE 10	16	-20 - +120	25	
CRE, CRIE 15-1 → 15-5	10		-	-
CRE, CRIE 15-1 → 15-8	-	-	16	-20 - +120
CRE, CRIE 15-9 → 15-12	-	-	25	
CRNE 15	10	-20 - +120	25	
CRE, CRIE 20-1 → 20-5	10		-	-
CRE, CRIE 20-1 → 20-7	-	-	16	-20 - +120
CRE, CRIE 20-8 → 20-10	-	-	25	
CRNE 20	10	-20 - +120	25	
CRE, CRNE 32-1-1 → 32-5	-	-	16	-30 - +120
CRE, CRNE 32-6-2 → 32-10-2	-	-	30	
CRE, CRNE 45-1-1 → 45-4	-	-	16	
CRE, CRNE 45-5-2 → 45-7	-	-	30	
CRE, CRNE 64-1-1 → 64-3	-	-	16	
CRE, CRNE 90-1-1 → 90-3	-	-	16	
CRE, CRNE 120	-	-	30	
CRE, CRNE 150	-	-	30	

NOTE: For pump sizes 32, 45, 64, 90, 120, 150, the max. pressure for PJE version is 50 bar and only available in CRNE version.

Operating range of the shaft seal

The operating range of the shaft seal depends on operating pressure, pump type, type of shaft seal and liquid temperature. The range shown in fig. 20 applies to clean water and water with anti-freeze liquids. For selection of the right shaft seal, see section *9. Pumped liquids*, page 77. If the operating range is exceeded, the life of the shaft seal may be reduced.

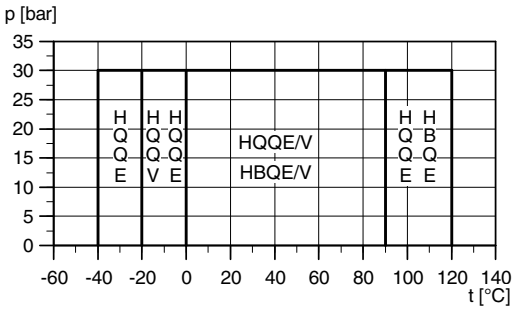

TM03 8853 4907

Fig. 20 Operating range of standard shaft seals

Standard shaft seal	Motor size [kW]	Description	Liquid temperature [°C]
HQQE	0.37 - 45	O-ring (cartridge) (balanced seal), SiC/SiC, EPDM	-40 - +120
HBQE[1)]	55-75	O-ring (cartridge) (balanced seal), carbon/SiC, EPDM	0-120
HQQV	0.37 - 45	O-ring (cartridge) (balanced seal), SiC/SiC, FKM	-20 - +90
HBQV[1)]	55-75	O-ring (cartridge) (balanced seal), carbon/SiC, FKM	0-90

1) Available as HQQE and HQQV on request.

See section *11. Variants*, page 94, in case of extreme temperatures:

- low temperatures down to -40 °C
- high temperatures up to 180 °C.

Maximum inlet pressure

The following table shows the maximum permissible inlet pressure. However, the actual inlet pressure plus the pressure against a closed valve must always be lower than the maximum permissible operating pressure.

If the maximum permissible operating pressure is exceeded, the conical bearing in the motor may be damaged and the life of the shaft seal reduced.

Pump type	[bar]
CRE, CRIE, CRNE 1	
1-2 → 1-25	10
1-27	15
CRE, CRIE, CRNE 3	
3-2 → 3-17	10
3-19 → 3-25	15
CRE, CRIE, CRNE 5	
5-2 → 5-9	10
5-10 → 5-24	15
CRE, CRIE, CRNE 10	
10-1 → 10-5	8
10-6 → 10-17	10
CRE, CRIE, CRNE 15	
15-1 → 15-2	8
15-3 → 15-12	10
CRE, CRIE, CRNE 20	
20-1	8
20-2 → 20-10	10
CRE, CRNE 32	
32-1-1 → 32-2	4
32-3-2 → 32-6	10
32-7	15
CRE, CRNE 45	
45-1-1 → 45-1	4
45-2-2 → 45-3	10
45-4-2	15
CRE, CRNE 64	
64-1-1	4
64-1 → 64-2-1	10
64-2 → 64-3-2	15
CRE, CRNE 90	
90-1-1 → 90-2-2	10
90-2-1	15
CRE, CRNE 120	
120-1	10
CRE, CRNE 150	
150-1-1	10
150-1	15

Examples of operating and inlet pressures

The values for operating and inlet pressures stated in the table should not be considered individually but should always be compared.
See the following examples.

Example 1

The following pump type has been selected:
CRE 3-11 A-A-A.

Maximum operating pressure: 16 bar. Maximum inlet pressure: 10 bar.

Discharge pressure against a closed valve: 9.6 bar.
See page 32.

This pump is not allowed to start at an inlet pressure of 10 bar, but at an inlet pressure of 16.0 - 10.3 = 5.7 bar.

Example 2

The following pump type has been selected:
CRE 10-2 A-A-A.

Maximum operating pressure: 16 bar.
Maximum inlet pressure: 8 bar.

Discharge pressure against a closed valve: 2.9 bar.
See page 39.

This pump is allowed to start at an inlet pressure of 8 bar, as the discharge pressure against a closed valve is only 2.9 bar, which results in an operating pressure of 8.0 + 2.9 = 10.9 bar. On the contrary, the maximum operating pressure of this pump is limited to 16 bar, as a higher operating pressure will require an inlet pressure of more than 8 bar.

If the inlet or operating pressure exceeds the permissible pressure, see section *11. Variants*, page 94.

6. Selection and sizing

Selection of pumps

Selection of pumps should be based on these parameters:

- the duty point of the pump (see below)
- dimensional data such as pressure loss as a result of height differences, friction loss in the pipework, pump efficiency (see below)
- pump materials (see page 25)
- pump connections (see page 25)
- shaft seal (see page 25).

Duty point of the pump

From a duty point, it is possible to select a pump on the basis of the curve charts in section *7. Performance curves and technical data*, page 28.

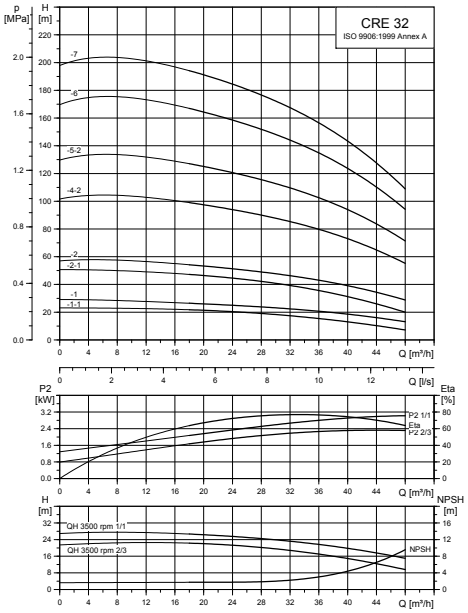

TM02 7323 3103

Fig. 21 Example of a curve chart

Dimensional data

When sizing a pump, take these parameters into account:

- Required flow and pressure at the draw-off point.
- Pressure loss as a result of height differences (H_{geo}).
- Friction loss in the pipework (H_f).
  It may be necessary to account for pressure loss in connection with long pipes, bends, valves, etc.
- Best efficiency at the estimated duty point.
- NPSH value.
  For calculation of the NPSH value, see *Minimum inlet pressure, NPSH*, page 26.

Pump efficiency

Before determining the best efficiency point, identify the operation pattern of the pump. If the pump is expected to operate at the same duty point, select a CR pump which is operating at a duty point corresponding to the best efficiency of the pump.

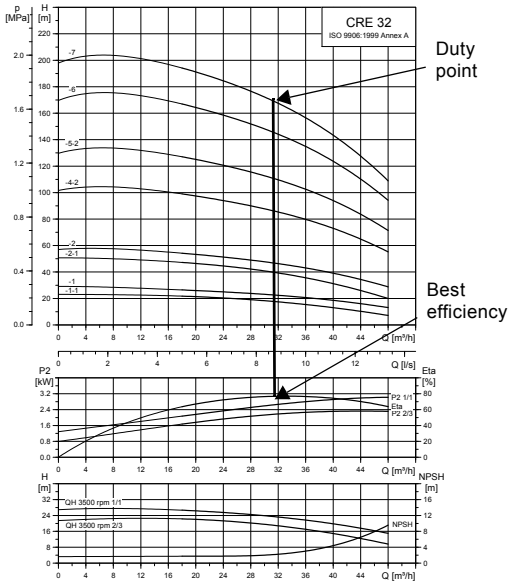

TM05 6846 0313

Fig. 22 Example of a CRE pump's duty point

As the pump is sized on the basis of the highest possible flow, it is important always to have the duty point to the right on the efficiency curve (eta) in order to keep the efficiency high when the flow drops.

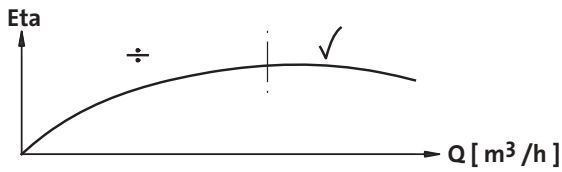

TM00 9190 1303

Fig. 23 Best efficiency

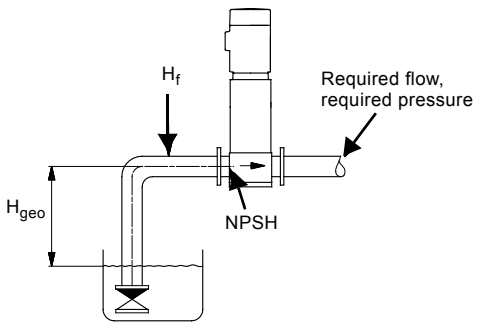

TM02 6711 1403

Fig. 24 Dimensional data

Normally, E-pumps are used in applications characterised by a variable flow. Consequently, it is not possible to select a pump that is constantly operating at optimum efficiency.

In order to achieve optimum operating economy, the pump should be selected on the basis of the following criteria:

- The maximum duty point required should be as close as possible to the QH curve of the pump.
- The flow rate at the duty point required should be close to the optimum efficiency (eta) for most operating hours.

Between the min. and max. performance curves, E-pumps have an infinite number of performance curves, each representing a specific speed. Therefore, it may not be possible to select a duty point close to the 100 % curve.

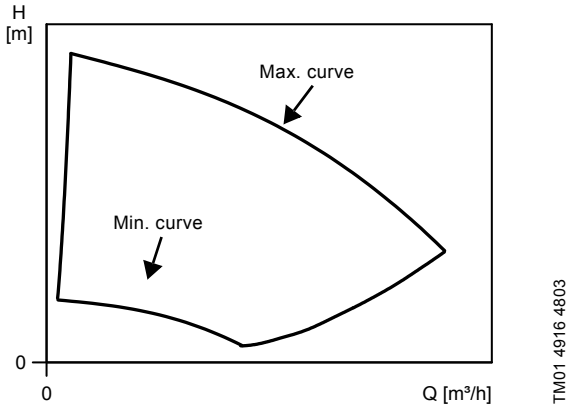

Fig. 25 Min. and max. performance curves

In situations where it is not possible to select a duty point close to the 100 % curve, the below affinity equations can be used. The head (H), flow (Q) and input power (P) are all the appropriate variables for the motor speed (n).

Note:

The approximated formulas apply on condition that the system characteristic remains unchanged for n_n and n_x and that it is based on the formula $H = k \times Q^2$ where k is a constant.

The power equation implies that the pump efficiency is unchanged at the two speeds. In practice, this is not quite correct.

To obtain a precise calculation of the power savings resulting from a reduction of pump speed, take into account the efficiencies of the frequency converter and the motor.

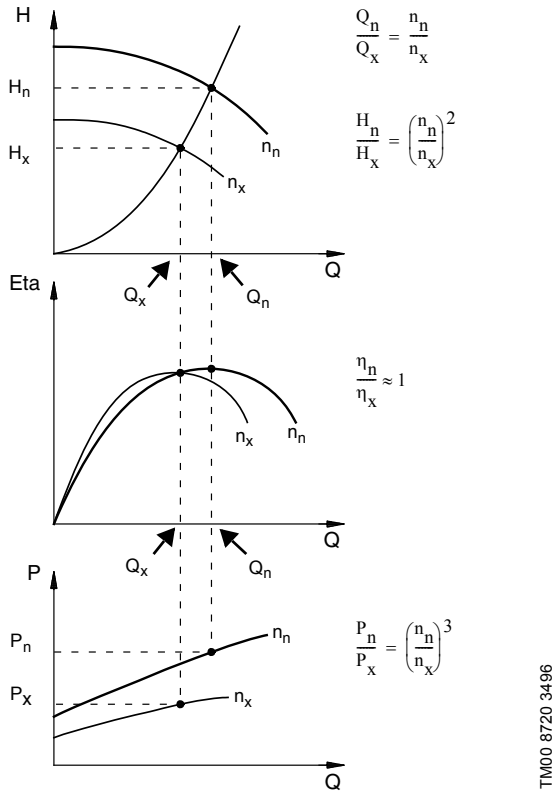

$$\frac{Q_n}{Q_x} = \frac{n_n}{n_x}$$

$$\frac{H_n}{H_x} = \left(\frac{n_n}{n_x}\right)^2$$

$$\frac{\eta_n}{\eta_x} \approx 1$$

$$\frac{P_n}{P_x} = \left(\frac{n_n}{n_x}\right)^3$$

Fig. 26 Affinity equations

Legend

H_n	Rated head [m]
H_x	Actual head [m]
Q_n	Rated flow rate [m^3/h]
Q_x	Actual flow rate [m^3/h]
n_n	Rated motor speed [min^{-1}] (n_n = 3500 min^{-1})
n_x	Actual motor speed [min^{-1}]
η_n	Rated efficiency [%]
η_x	Actual efficiency [%]

WinCAPS and WebCAPS

WinCAPS and WebCAPS are both selection programmes offered by Grundfos.

The two programmes offer the possibility of calculating an E-pump's specific duty point and energy consumption.

By entering the dimensional data of the pump, WinCAPS and WebCAPS can calculate the exact duty point and energy consumption.

See section *12. Further product information* for further information.

Pump material

Select the material variant on the basis of the liquid to be pumped.

The product range covers the following three basic types:

- CRE, CRIE
  Use CRE, CRIE pumps for clean, non-aggressive liquids such as potable water and oils.
- CRNE
  Use CRNE pumps for industrial liquids and acids. See section *9. Pumped liquids*, page 77, or contact Grundfos.

For saline or chloride-containing liquids such as sea water, CRTE pumps of titanium are available.

Pump connections

The selection of pump connection depends on the rated pressure and pipework. To meet any requirement, the CRE, CRIE and CRNE pumps offer a wide range of flexible connections, such as

- oval flange (BSP)
- DIN flange
- PJE coupling
- clamp coupling
- union (+GF+)
- other connections on request.

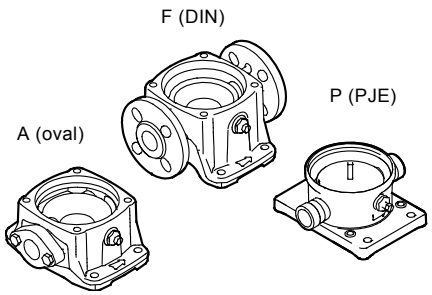

TM02 1201 0601

Fig. 27 Pump connections

Shaft seal

As standard, the CRE range is fitted with a Grundfos shaft seal (cartridge type) suitable for the most common applications.

These key parameters must be taken into account when selecting the shaft seal:

- type of pumped liquid
- liquid temperature
- maximum pressure.

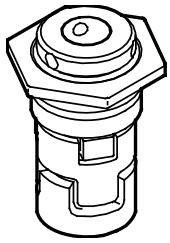

TM02 0538 4800

Fig. 28 Shaft seal (cartridge type)

We offer a wide range of shaft seal variants to meet specific demands. See section *9. Pumped liquids*, page 77.

Operating pressure and inlet pressure

Do not exceed the limit values for these pressures:

- maximum operating pressure (see page 21)
- maximum inlet pressure (see page 22).

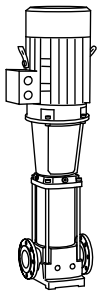

TM01 2100 1198

Fig. 29 CR pump

Minimum inlet pressure, NPSH

Calculation of the inlet pressure "H" is recommended in these situations:

- The liquid temperature is high.
- The flow is significantly higher than the rated flow.
- Water is drawn from depths.
- Water is drawn through long pipes.
- Inlet conditions are poor.

To avoid cavitation, make sure that there is a minimum pressure on the suction side of the pump.

The maximum suction lift "H" in metres head can be calculated as follows:

$H = p_b \times 10.2 - NPSH - H_f - H_v - H_s$

p_b	=	Barometric pressure in bar. Barometric pressure can be set to 1 bar. In closed systems, p_b indicates the system pressure in bar.
NPSH	=	Net Positive Suction Head in metres head. To be read from the NPSH curve at the highest flow the pump will be delivering.
H_f	=	Friction loss in suction pipe in metres head. At the highest flow the pump will be delivering.
H_v	=	Vapour pressure in metres head. To be read from the vapour pressure scale. H_v depends on the liquid temperature t_m.
H_s	=	Safety margin = minimum 0.5 metres head.

If the calculated "H" is positive, the pump can operate at a suction lift of maximum "H" metres head.

If the calculated "H" is negative, an inlet pressure of minimum "H" metres head is required.

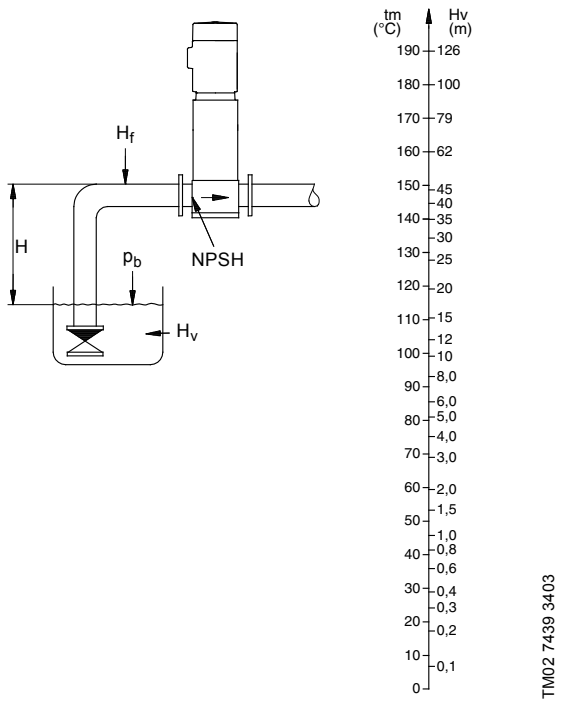

Fig. 30 Minimum inlet pressure, NPSH

Note: To avoid cavitation, never select a pump with a duty point too far to the right on the NPSH curve.

Always check the NPSH value of the pump at the highest possible flow.

How to read the curve charts

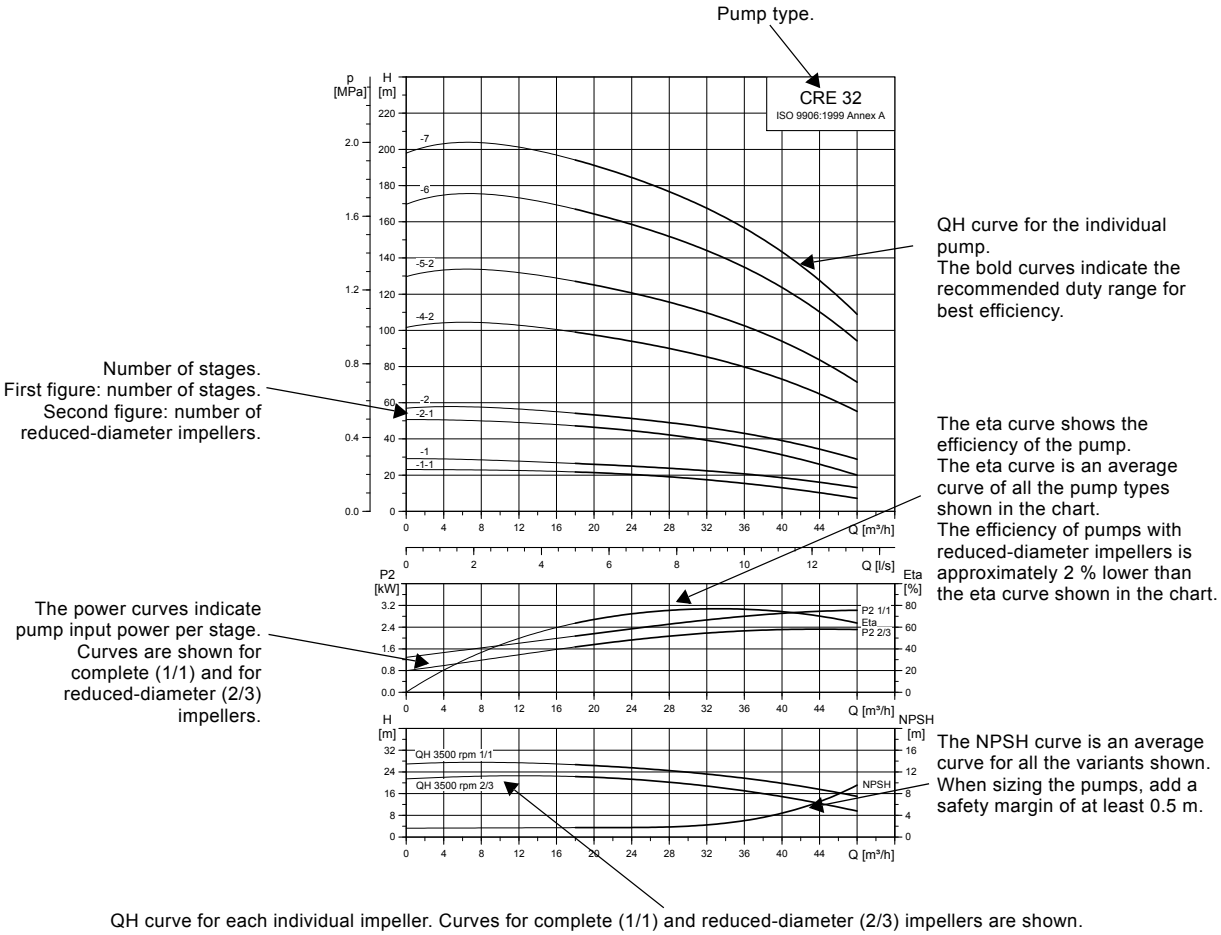

Fig. 31 How to read the curve charts

Guidelines to performance curves

The guidelines below apply to the curves shown on the following pages:

- Tolerances to ISO 9906:1999 Annex A, if indicated.
- The motors used for the measurements are standard Grundfos MG or MGE motors.
- Measurements have been made with airless water at a temperature of 20 °C.
- The curves apply to the following kinematic viscosity: υ = 1 mm^2/s (1 cSt).

Due to the risk of overheating, the pumps should not be used at a flow below the minimum flow rate.

The curve below shows the minimum flow rate as a percentage of the rated flow rate in relation to the liquid temperature. The dotted line shows a CR pump fitted with an air-cooled top assembly.

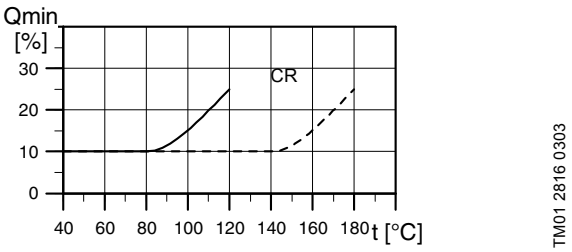

Fig. 32 Minimum flow rate

7. Performance curves and technical data

CRE 1

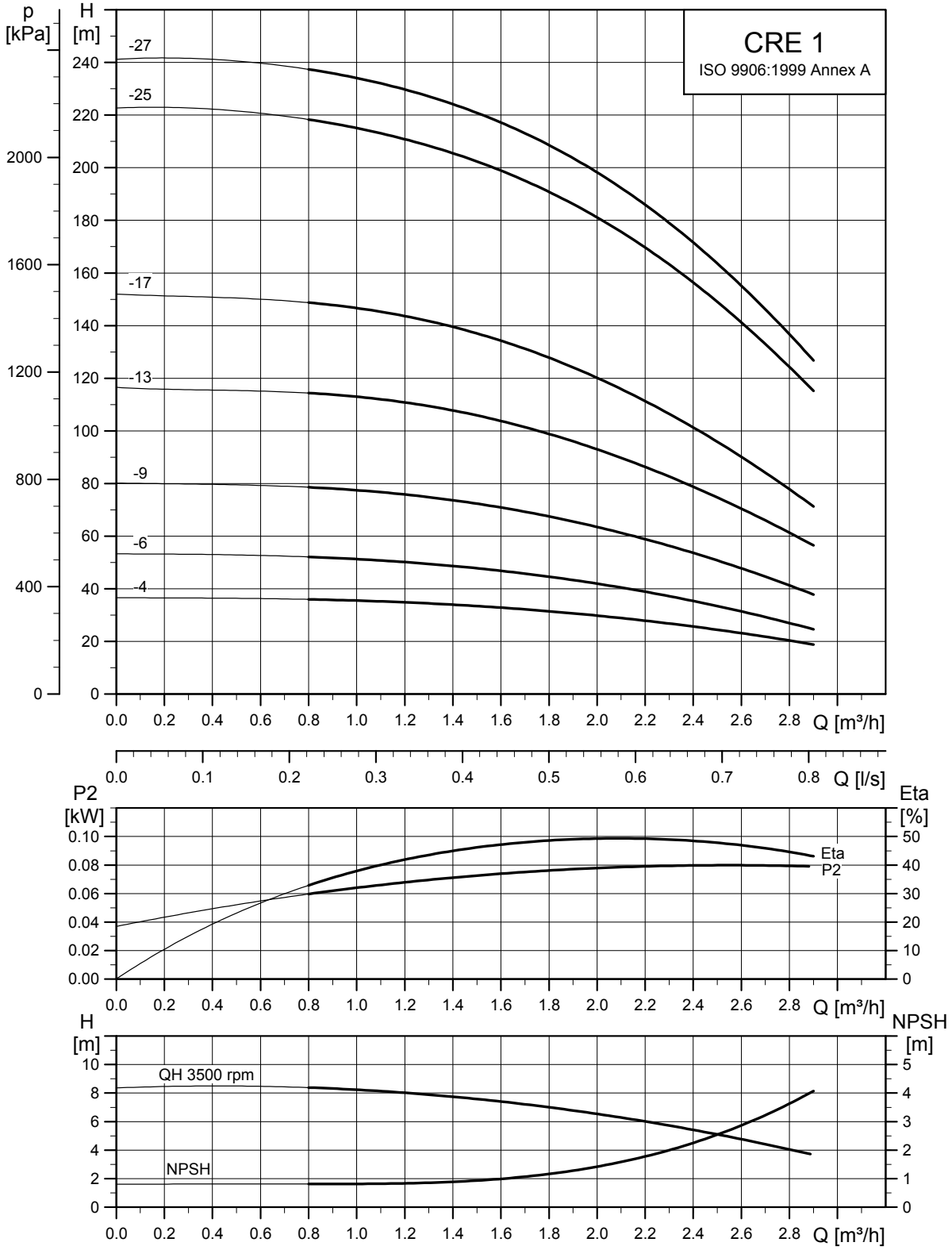

Dimensional sketches

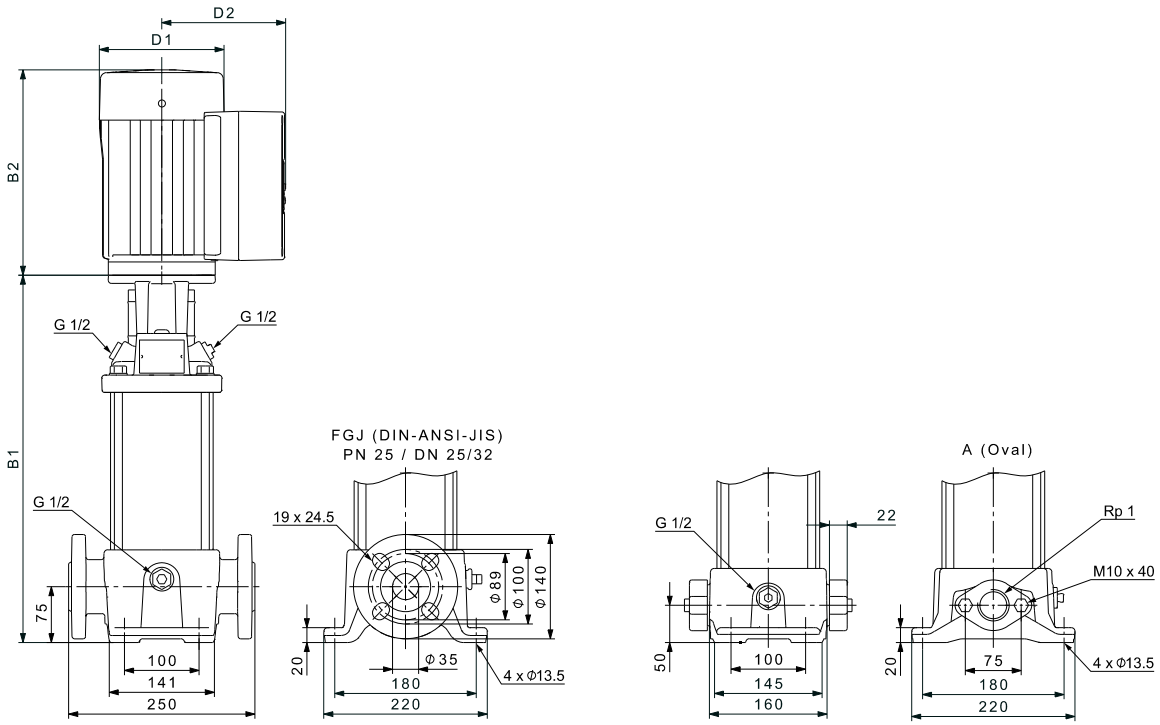

TM05 9394 3713

Dimensions and weights

Pump type	P_2 [kW]	CRE							
		Dimension [mm]						Net weight [kg]	
		Oval flange		DIN flange		D1	D2	Oval flange	DIN flange
		B1	B1+B2	B1	B1+B2				
CRE 1-4	0.37	272	486	297	511	122	158	22	26
CRE 1-6	0.55	308	522	333	547	122	158	22	27
CRE 1-9	0.75	368	582	393	607	122	158	24	29
CRE 1-13	1.1	440	654	465	679	122	158	27	31
CRE 1-17	1.5	528	802	553	827	122	158	33	38
CRE 1-25	2.2	-	-	697	971	178	167	-	42
CRE 1-27	3	-	-	737	1072	198	177	-	59

Pumps fitted with single-phase MGE motors (0.37, 0.55, 0.75 or 1.1 kW) can as an option be fitted with three-phase MGE motors.
Pumps fitted with 1.5 kW three-phase MGE motors can as an option be fitted with single-phase MGE motors.
See WinCAPS or WebCAPS for dimensions.

CRIE, CRNE 1

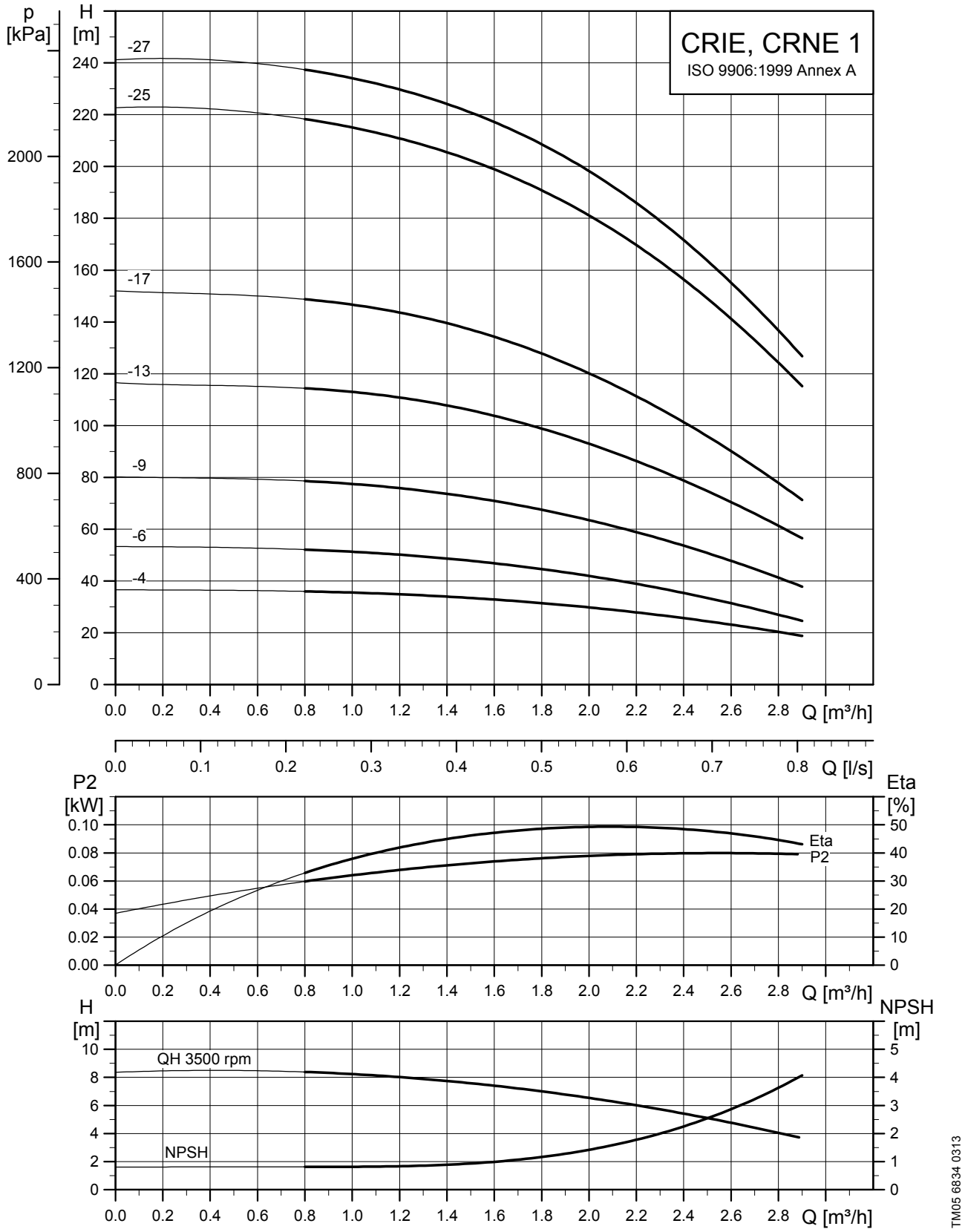
CRIE, CRNE 1
ISO 9906:1999 Annex A
p [kPa]
H [m]
-27
-25
-17
-13
-9
-6
-4
Q [m³/h]
Q [l/s]
P2 [kW]
Eta [%]
Eta
P2
H [m]
NPSH [m]
QH 3500 rpm
NPSH
TM05 6834 0313

Dimensional sketches

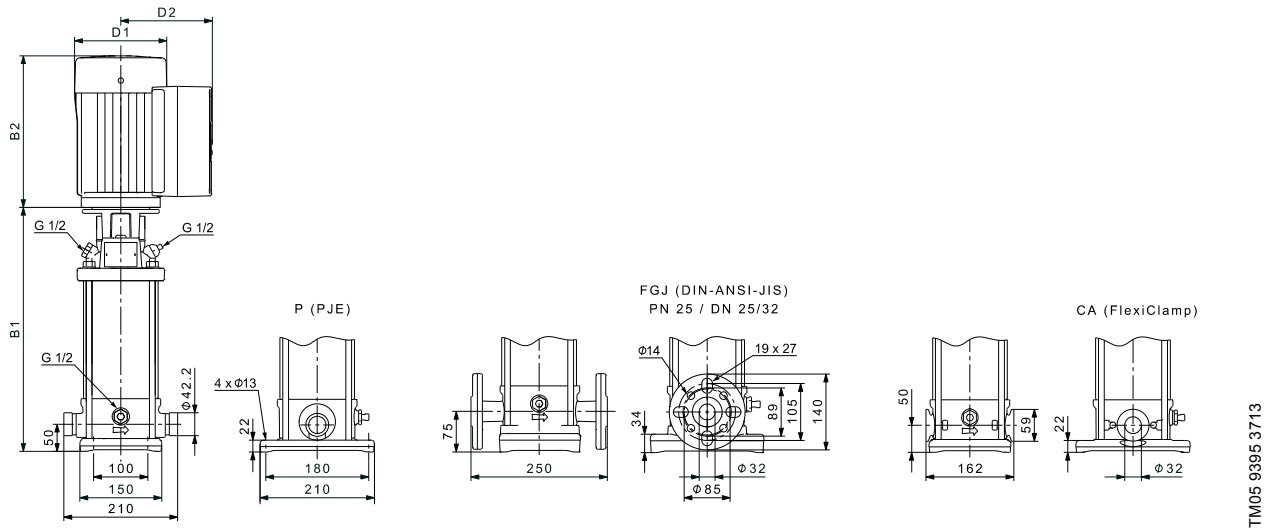

Dimensions and weights

Pump type	P_2 [kW]	CRIE/CRNE							
		Dimension [mm]						Net weight [kg]	
		PJE/CA		DIN flange		D1	D2	PJE/ CA	DIN flange
		B1	B1+B2	B1	B1+B2				
CRIE/CRNE 1-4	0.37	275	489	300	514	122	158	20	24
CRIE/CRNE 1-6	0.55	311	525	336	550	122	158	21	25
CRIE/CRNE 1-9	0.75	371	585	396	610	122	158	23	27
CRIE/CRNE 1-13	1.1	443	657	468	682	122	158	26	30
CRIE/CRNE 1-17	1.5	531	805	556	830	122	158	31	35
CRIE/CRNE 1-25	2.2	675	949	700	974	122	158	36	40
CRIE/CRNE 1-27	3	716	1051	741	1076	198	177	53	57

Pumps fitted with single-phase MGE motors (0.37, 0.55, 0.75 or 1.1 kW) can as an option be fitted with three-phase MGE motors.
Pumps fitted with 1.5 kW three-phase MGE motors can as an option be fitted with single-phase MGE motors.
See WinCAPS or WebCAPS for dimensions.

CRE 3

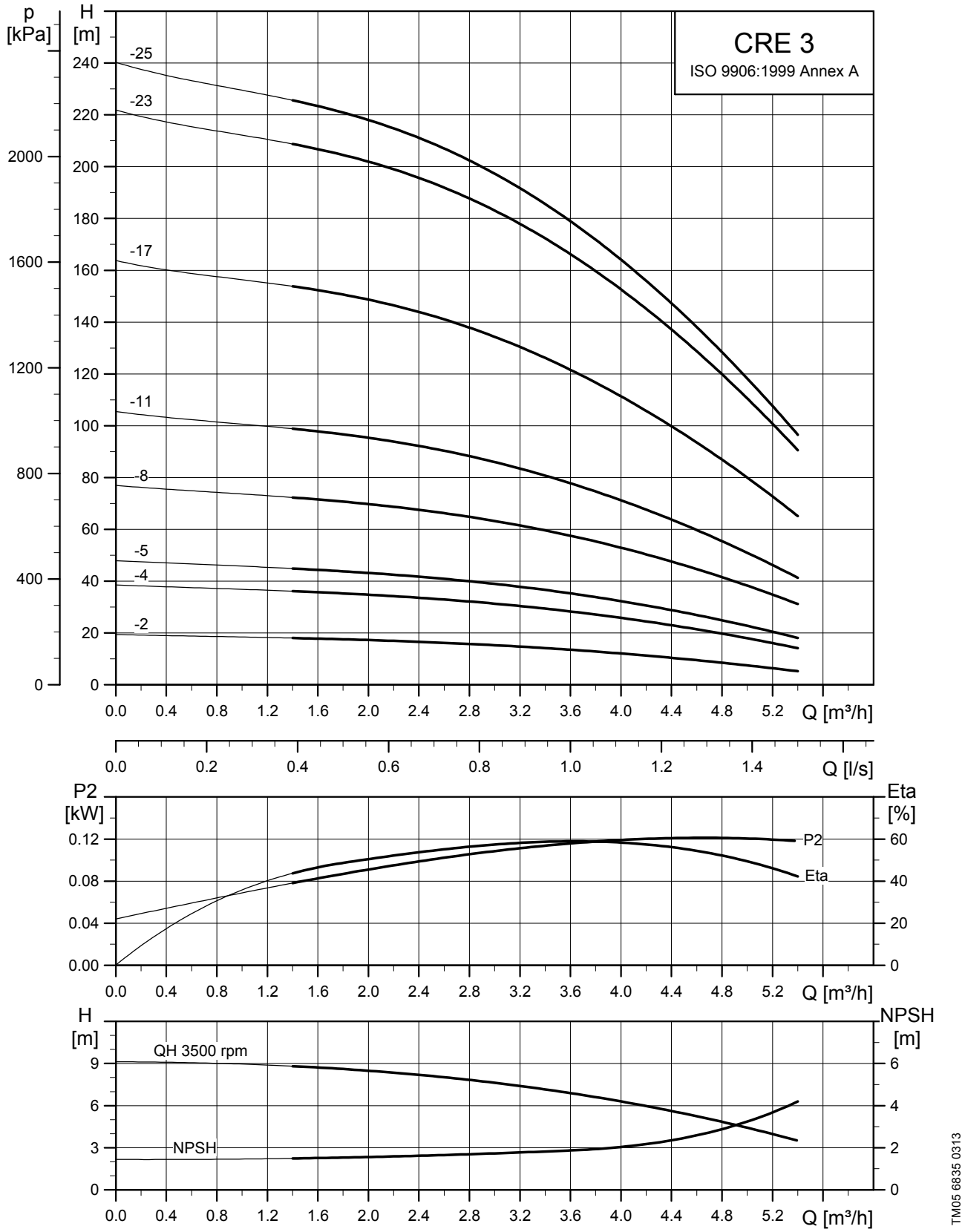
CRE 3
ISO 9906:1999 Annex A
p [kPa]
H [m]
-25
-23
-17
-11
-8
-5
-4
-2
Q [m³/h]
Q [l/s]
P2 [kW]
Eta [%]
P2
Eta
H [m]
NPSH [m]
QH 3500 rpm
NPSH
TM05 6835 0313

Dimensional sketches

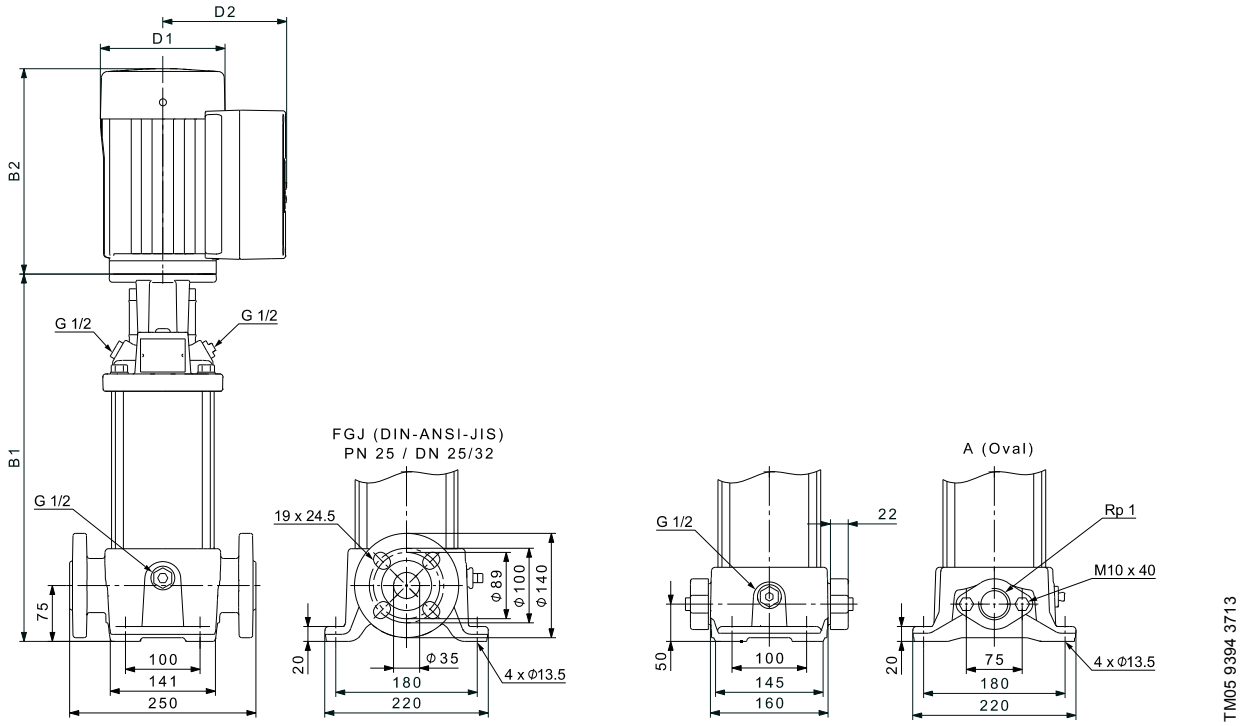

Dimensions and weights

Pump type	P_2 [kW]	CRE							
		Dimension [mm]						Net weight [kg]	
		Oval flange		DIN flange		D1	D2	Oval flange	DIN flange
		B1	B1+B2	B1	B1+B2				
CRE 3-2	0.37	254	468	279	493	122	158	21	26
CRE 3-4	0.55	272	486	297	511	122	158	22	26
CRE 3-5	0.75	296	510	321	535	122	158	23	27
CRE 3-8	1.1	350	564	375	589	122	158	25	29
CRE 3-11	1.5	420	694	445	719	122	158	31	35
CRE 3-17	2.2	-	-	553	827	122	158	-	39
CRE 3-23	3	-	-	665	1000	198	177	-	57
CRE 3-25	4	-	-	701	1073	220	188	-	69

Pumps fitted with single-phase MGE motors (0.37, 0.55, 0.75 or 1.1 kW) can as an option be fitted with three-phase MGE motors.
Pumps fitted with 1.5 kW three-phase MGE motors can as an option be fitted with single-phase MGE motors.
See WinCAPS or WebCAPS for dimensions.

CRIE, CRNE 3

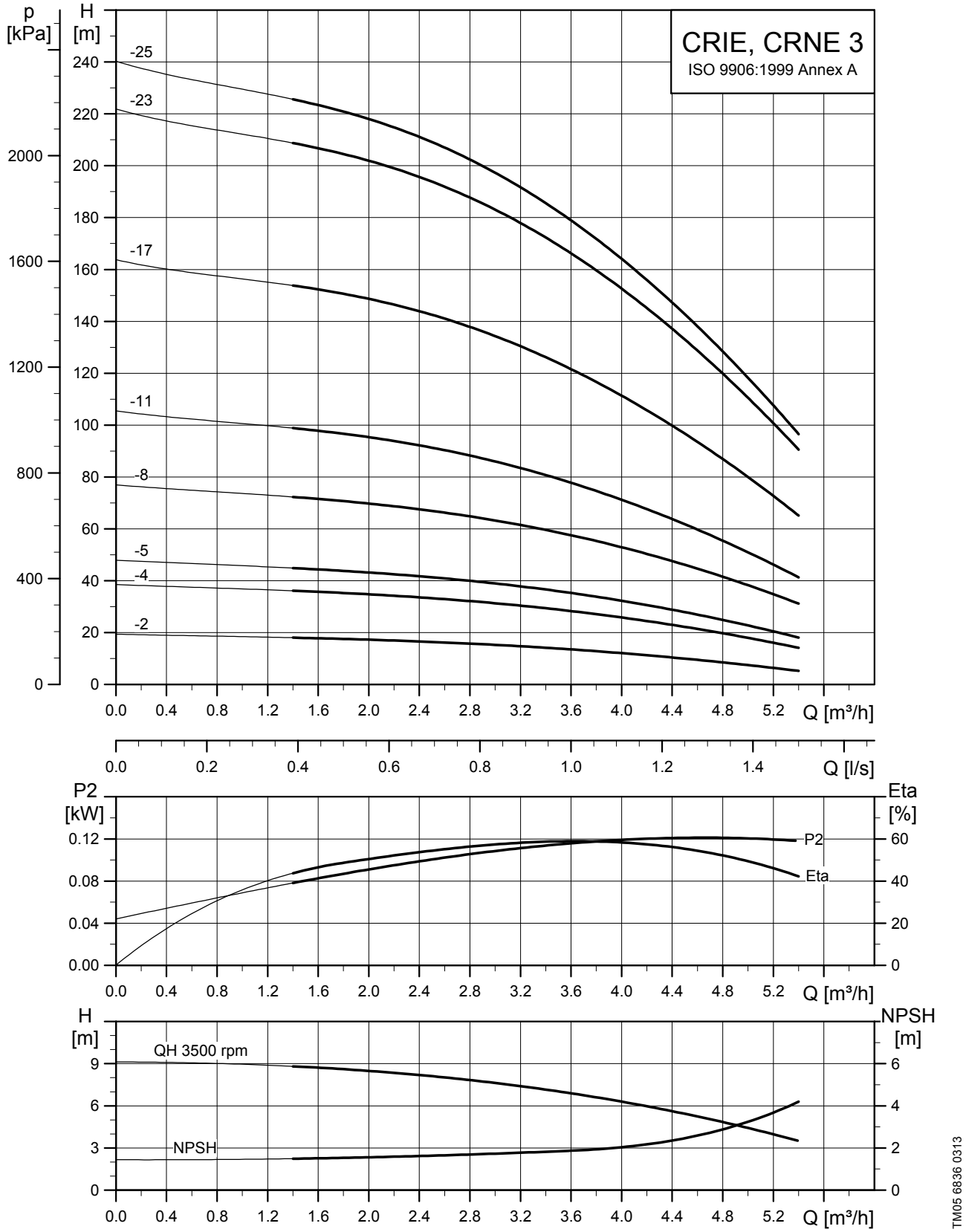
CRIE, CRNE 3
ISO 9906:1999 Annex A
p [kPa]
H [m]
-25
-23
-17
-11
-8
-5
-4
-2
Q [m³/h]
Q [l/s]
P2 [kW]
Eta [%]
P2
Eta
H [m]
NPSH [m]
QH 3500 rpm
NPSH
TM05 6836 0313

Dimensional sketches

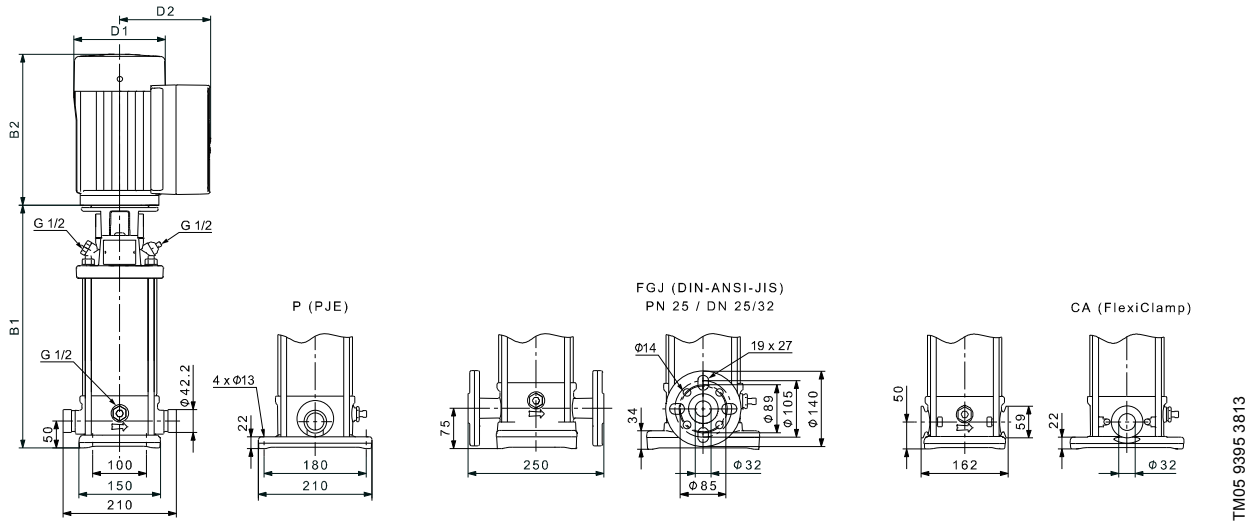

Dimensions and weights

Pump type	P_2 [kW]	CRIE/CRNE							
		Dimension [mm]						Net weight [kg]	
		PJE/CA		DIN flange		D1	D2	PJE/ CA	DIN flange
		B1	B1+B2	B1	B1+B2				
CRIE/CRNE 3-2	0.37	257	471	282	496	122	158	19	23
CRIE/CRNE 3-4	0.55	275	489	300	514	122	158	20	24
CRIE/CRNE 3-5	0.75	299	513	324	538	122	158	22	26
CRIE/CRNE 3-8	1.1	353	567	378	592	122	158	24	28
CRIE/CRNE 3-11	1.5	423	657	448	682	122	158	27	31
CRIE/CRNE 3-17	2.2	531	805	556	830	122	158	33	37
CRIE/CRNE 3-23	3	644	979	669	1004	198	177	51	55
CRIE/CRNE 3-25	4	680	1052	705	1077	220	188	63	67

Pumps fitted with single-phase MGE motors (0.37, 0.55, 0.75 or 1.1 kW) can as an option be fitted with three-phase MGE motors.
Pumps fitted with 1.5 kW three-phase MGE motors can as an option be fitted with single-phase MGE motors.
See WinCAPS or WebCAPS for dimensions.

CRE 5

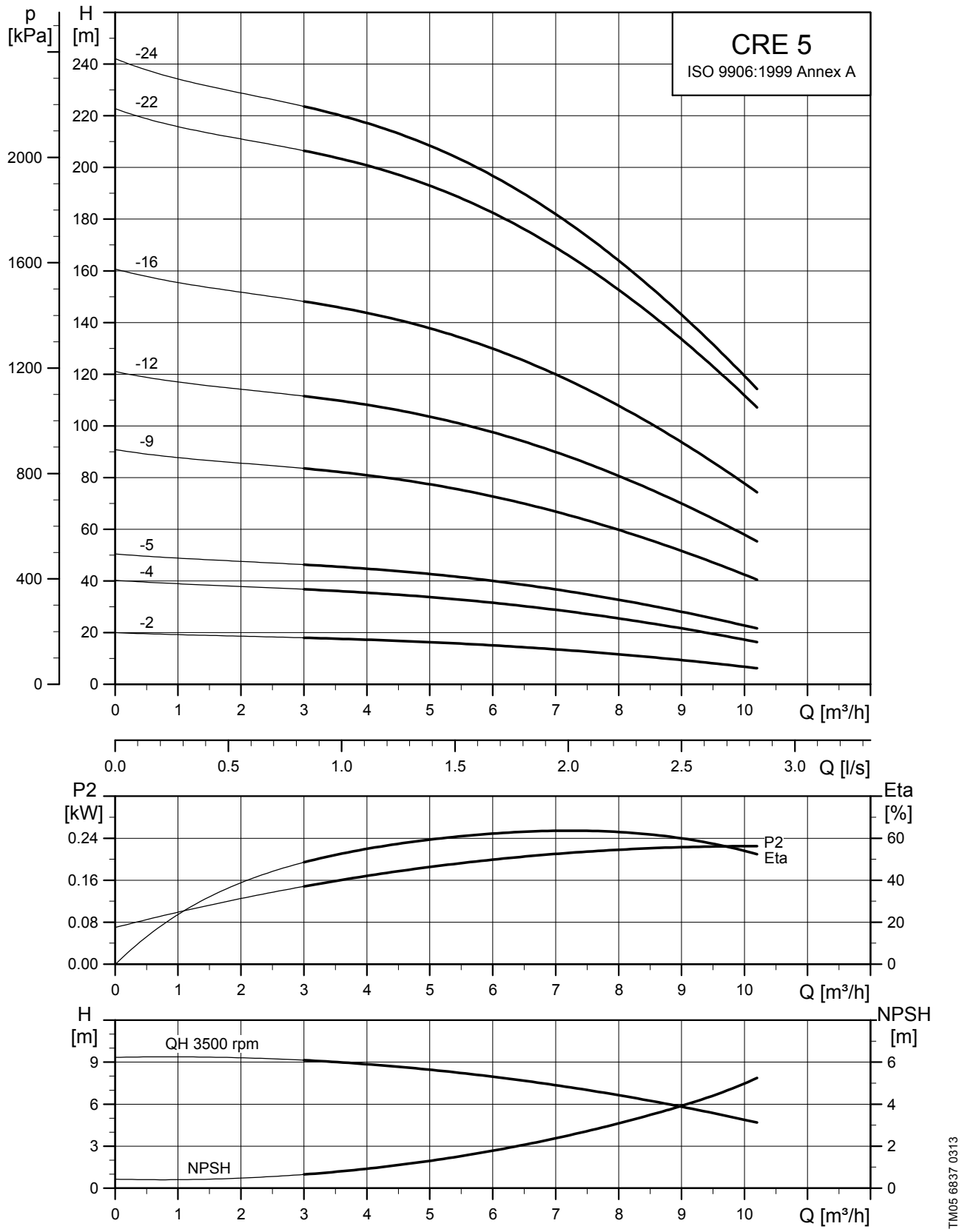
CRE 5
ISO 9906:1999 Annex A
p [kPa]
H [m]
-24
-22
-16
-12
-9
-5
-4
-2
Q [m³/h]
Q [l/s]
P2 [kW]
Eta [%]
P2
Eta
H [m]
NPSH [m]
QH 3500 rpm
NPSH
TM05 6837 0313

Dimensional sketches

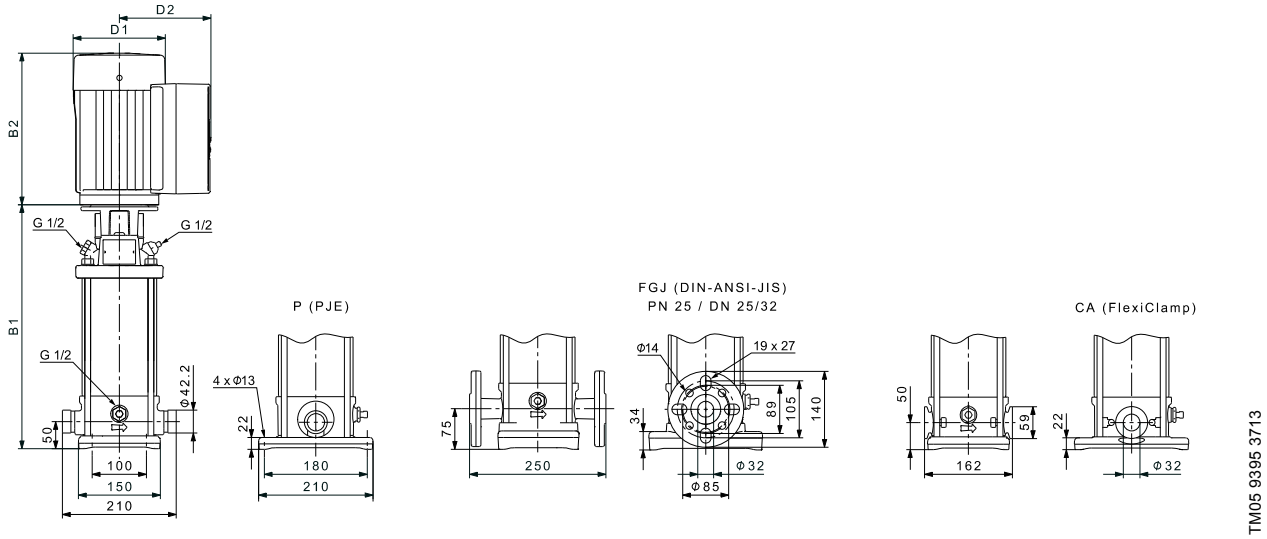

Dimensions and weights

Pump type	P_2 [kW]	CRE								
		Dimension [mm]							Net weight [kg]	
		PJE		DIN flange		D1	D2	D3	Oval flange	DIN flange
		B1	B1+B2	B1	B1+B2					
CRE 5-2	0.55	254	468	279	493	122	158	105	21	26
CRE 5-4	1.1	314	528	339	553	122	158	120	24	28
CRE 5-5	1.5	357	631	382	656	122	158	135	29	34
CRE 5-9	2.2	465	739	490	764	122	158	135	33	37
CRE 5-12	3	550	885	575	910	198	177	160	50	55
CRE 5-16	4	658	1030	683	1055	220	188	160	64	68
CRE 5-22	5.5	-	-	875	1266	220	188	300	-	83
CRE 5-24	7.5	-	-	929	1320	260	213	300	-	87

Pumps fitted with single-phase MGE motors (0.37, 0.55, 0.75 or 1.1 kW) can as an option be fitted with three-phase MGE motors.
Pumps fitted with 1.5 kW three-phase MGE motors can as an option be fitted with single-phase MGE motors.
See WinCAPS or WebCAPS for dimensions.

CRIE, CRNE 5

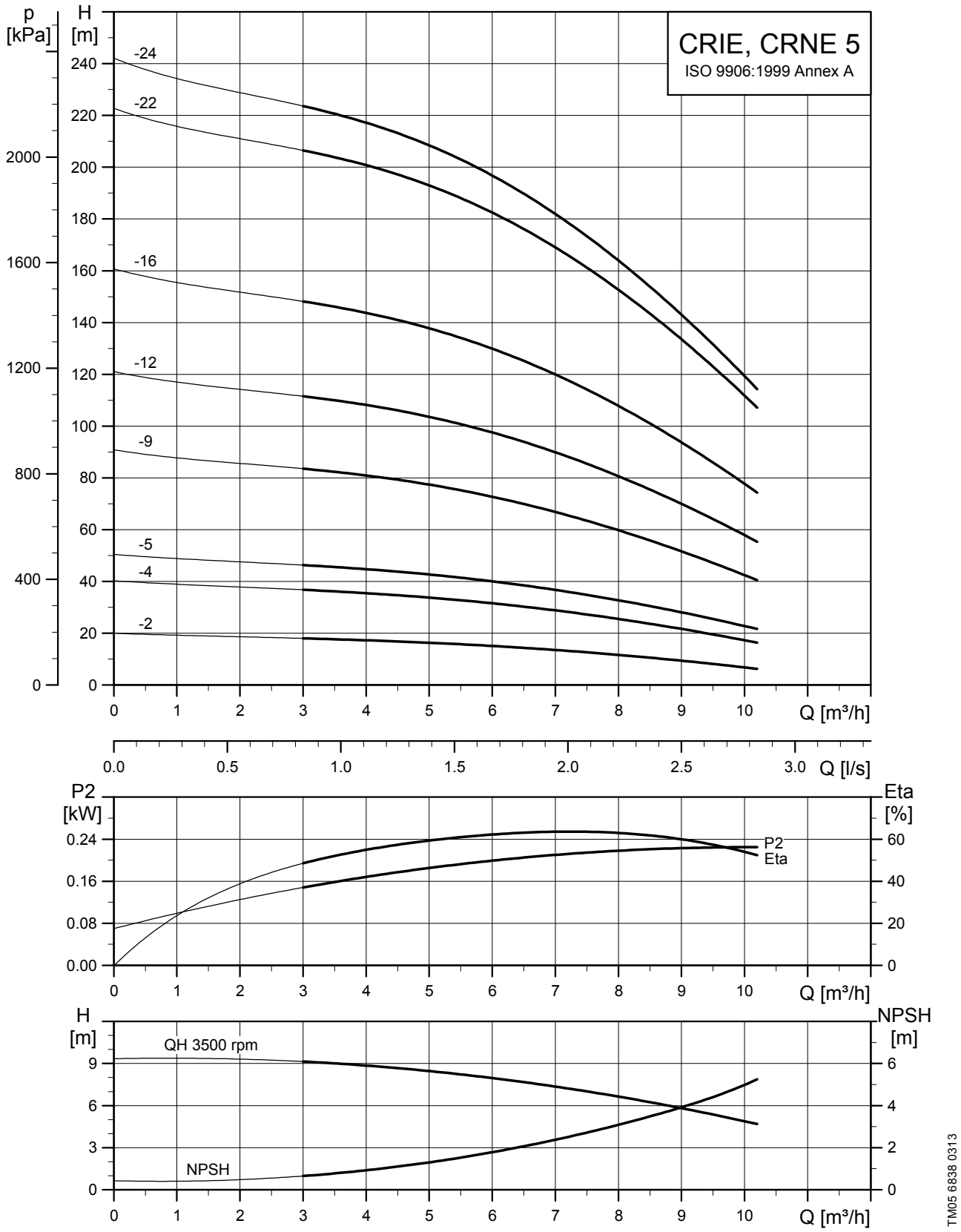
CRIE, CRNE 5
ISO 9906:1999 Annex A
p [kPa]
H [m]
-24
-22
-16
-12
-9
-5
-4
-2
Q [m³/h]
Q [l/s]
P2 [kW]
Eta [%]
P2
Eta
H [m]
NPSH [m]
QH 3500 rpm
NPSH
TM05 6838 0313

Dimensional sketches

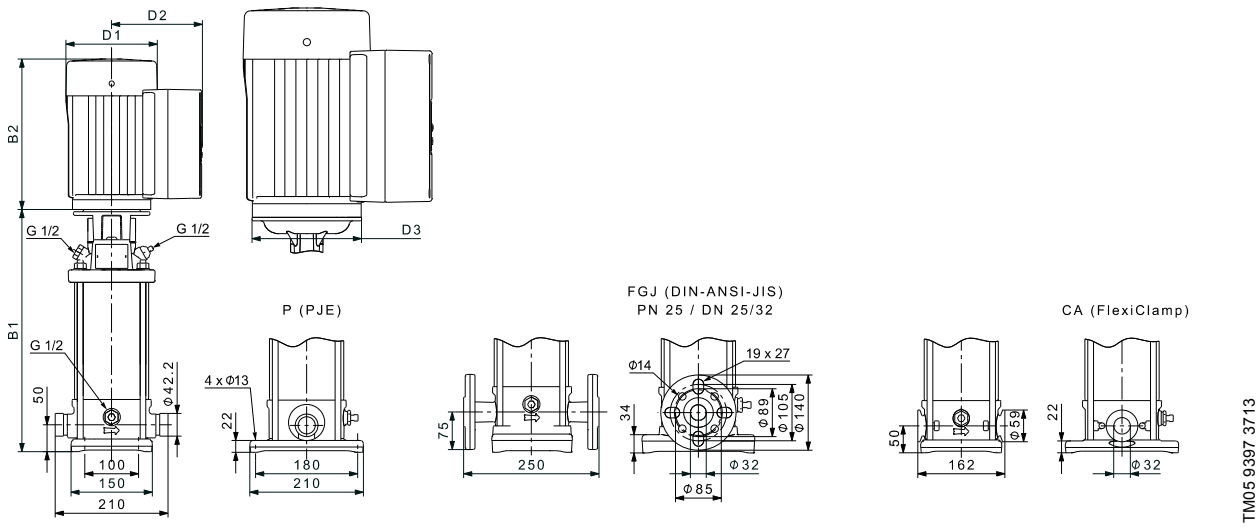

Dimensions and weights

Pump type	P_2 [kW]	CRIE/CRNE								
		Dimension [mm]							Net weight [kg]	
		PJE/CA		DIN flange		D1	D2	D3	PJE/ CA	DIN flange
		B1	B1+B2	B1	B1+B2					
CRIE/CRNE 5-2	0.55	257	471	282	496	122	158	105	19	23
CRIE/CRNE 5-4	1.1	317	531	342	556	122	158	120	23	27
CRIE/CRNE 5-5	1.5	360	634	385	659	122	158	135	27	31
CRIE/CRNE 5-9	2.2	468	742	493	767	122	158	135	31	35
CRIE/CRNE 5-12	3	554	889	579	914	198	177	160	49	53
CRIE/CRNE 5-16	4	662	1034	687	1059	220	188	160	62	66
CRIE/CRNE 5-22	5.5	853	1244	878	1269	220	188	300	76	80
CRIE/CRNE 5-24	7.5	907	1298	932	1323	260	213	300	80	84

Pumps fitted with single-phase MGE motors (0.37, 0.55, 0.75 or 1.1 kW) can as an option be fitted with three-phase MGE motors.
Pumps fitted with 1.5 kW three-phase MGE motors can as an option be fitted with single-phase MGE motors.
See WinCAPS or WebCAPS for dimensions.

CRE 10

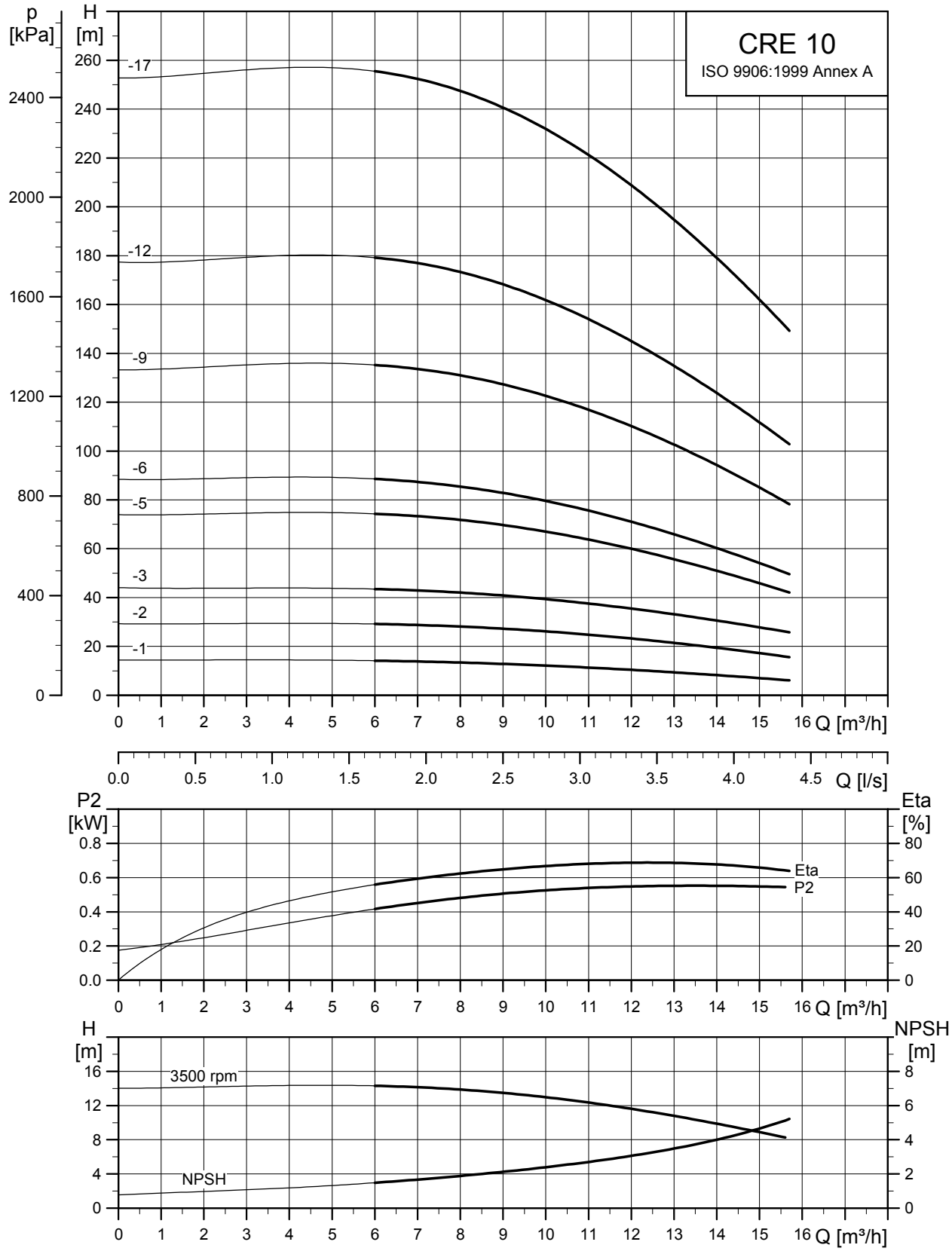
CRE 10
ISO 9906:1999 Annex A
p [kPa]
H [m]
-17
-12
-9
-6
-5
-3
-2
-1
Q [m³/h]
Q [l/s]
P2 [kW]
Eta [%]
Eta
P2
H [m]
NPSH [m]
3500 rpm
NPSH
TM05 6839 0313

Dimensional sketches

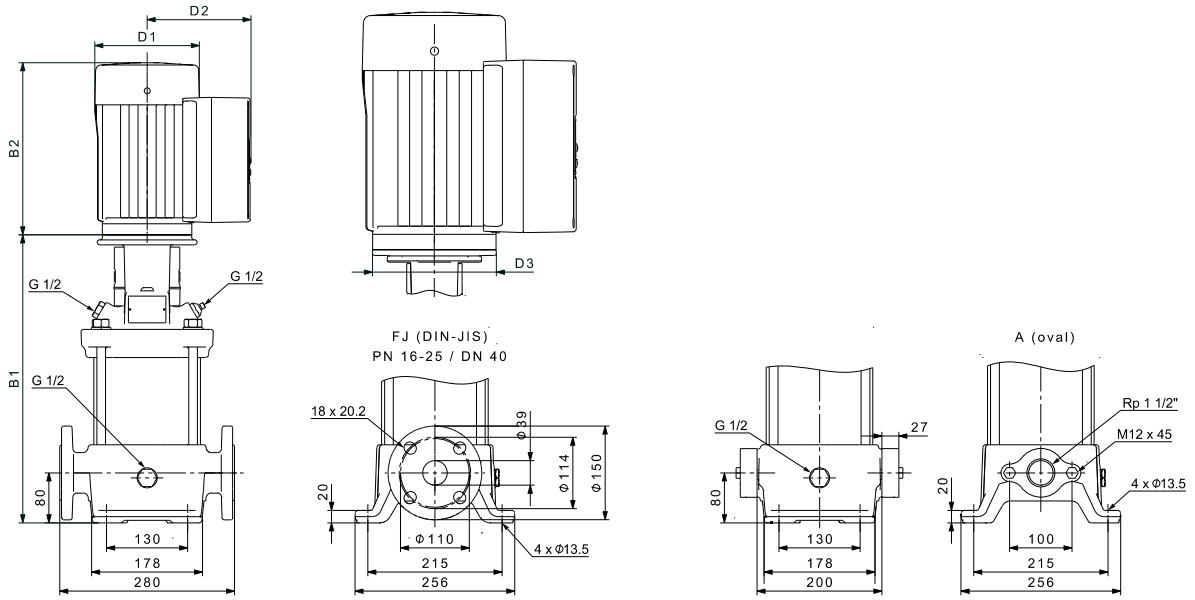

Dimensions and weights

Pump type	P_2 [kW]	CRE								
		Dimension [mm]							Net weight [kg]	
		PJE		DIN flange		D1	D2	D3	Oval flange	DIN flange
		B1	B1+B2	B1	B1+B2					
CRE 10-1	0.75	347	561	347	561	122	158	120	35	37
CRE 10-2	1.5	363	637	363	637	122	158	135	40	43
CRE 10-3	2.2	393	667	393	667	122	158	135	43	45
CRE 10-5	3	458	793	458	793	198	177	160	60	63
CRE 10-6	4	488	860	488	860	220	188	160	72	75
CRE 10-9	5.5	610	1001	610	1001	220	188	300	93	95
CRE 10-12	7.5	-	-	700	1091	260	213	300	-	102
CRE 10-17	11	-	-	972	1443	314	308	350	-	196

Pumps fitted with single-phase MGE motors (0.37, 0.55, 0.75 or 1.1 kW) can as an option be fitted with three-phase MGE motors.
Pumps fitted with 1.5 kW three-phase MGE motors can as an option be fitted with single-phase MGE motors.
See WinCAPS or WebCAPS for dimensions.

CRE, CRIE, CRNE 10

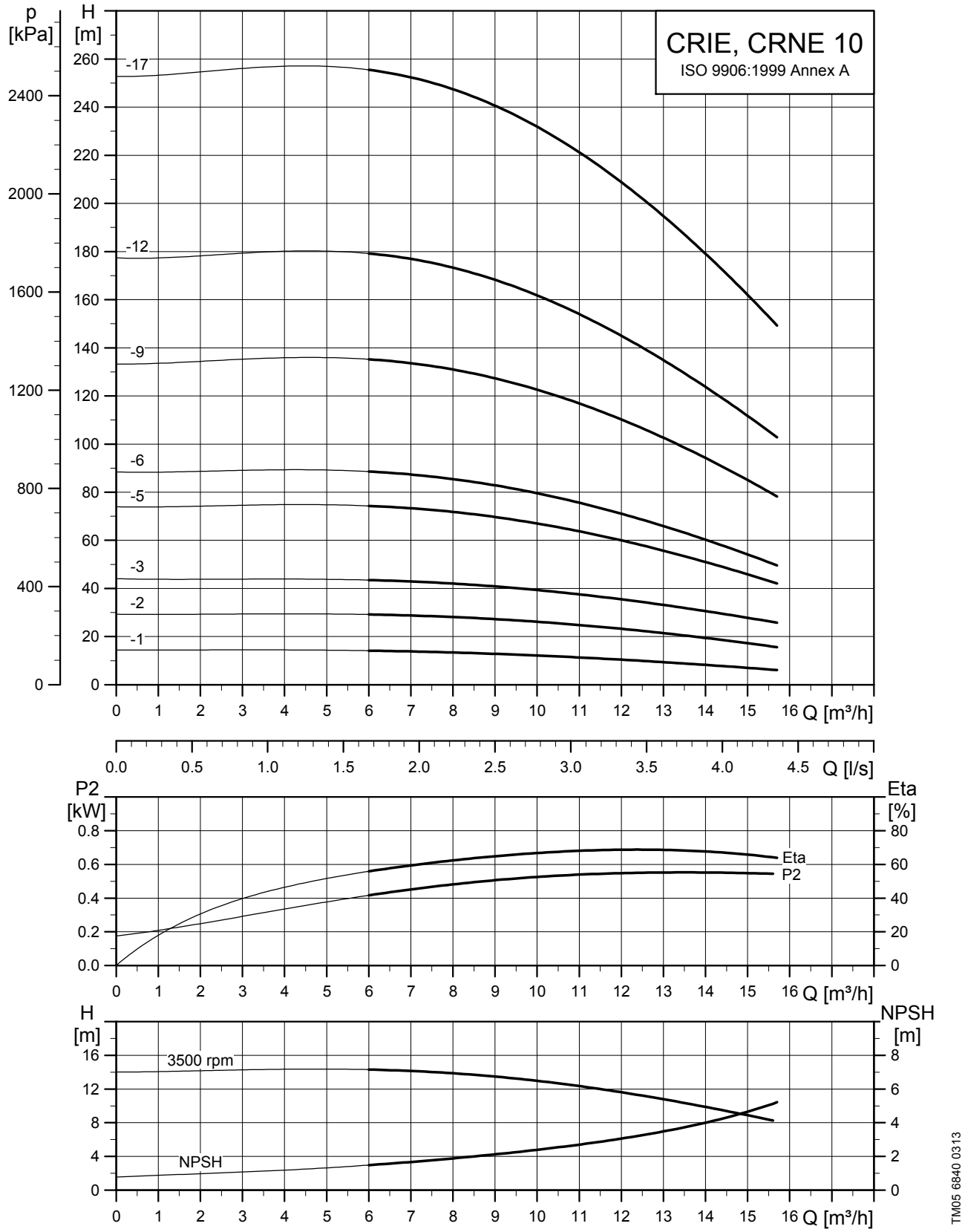

Dimensional sketches

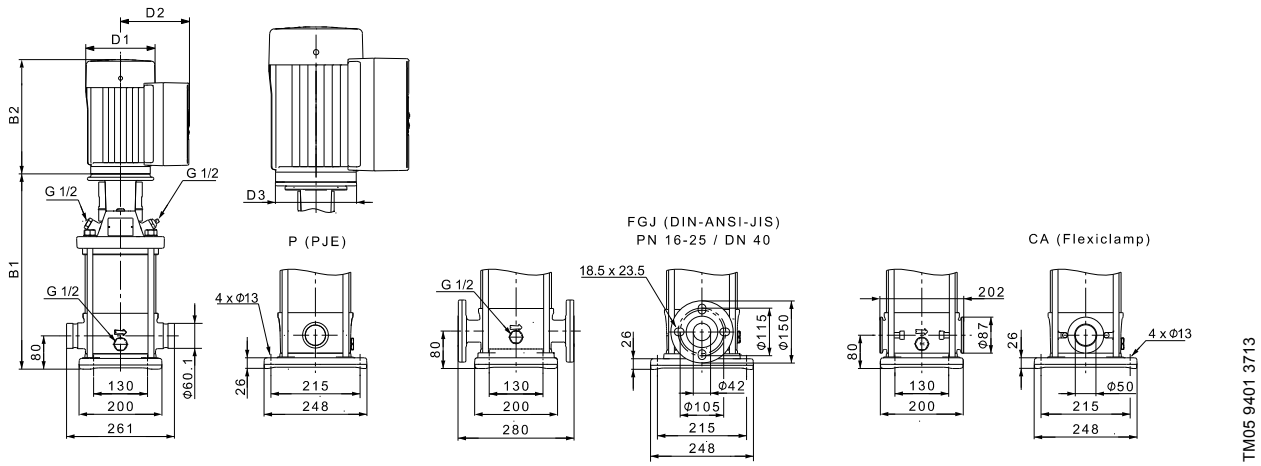

Dimensions and weights

Pump type	P_2 [kW]	CRIE/CRNE								
		Dimension [mm]							Net weight [kg]	
		PJE/CA		DIN flange		D1	D2	D3	PJE/ CA	DIN flange
		B1	B1+B2	B1	B1+B2					
CRIE/CRNE 10-1	0.75	357	571	357	571	122	158	120	32	35
CRIE/CRNE 10-2	1.5	373	647	373	647	122	158	135	38	41
CRIE/CRNE 10-3	2.2	403	677	403	677	122	158	135	40	44
CRIE/CRNE 10-5	3	468	803	468	803	198	177	160	58	62
CRIE/CRNE 10-6	4	498	870	498	870	220	188	160	70	74
CRIE/CRNE 10-9	5.5	620	1011	620	1011	220	188	300	90	94
CRIE/CRNE 10-12	7.5	710	1101	710	1101	260	213	300	97	101
CRIE/CRNE 10-17	11	982	1453	982	1453	314	308	350	190	194

Pumps fitted with single-phase MGE motors (0.37, 0.55, 0.75 or 1.1 kW) can as an option be fitted with three-phase MGE motors.
Pumps fitted with 1.5 kW three-phase MGE motors can as an option be fitted with single-phase MGE motors.
See WinCAPS or WebCAPS for dimensions.

CRE 15

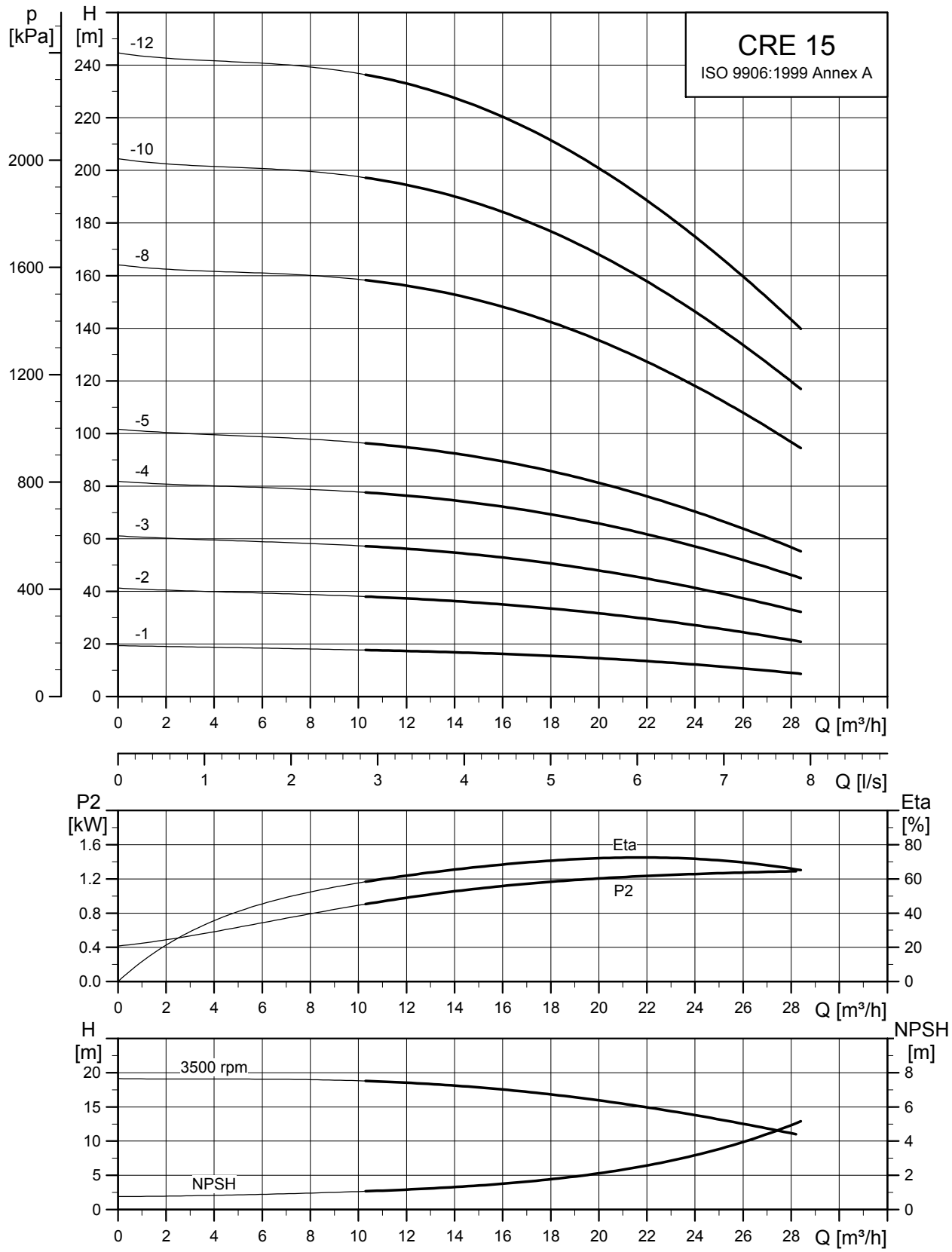
CRE 15
ISO 9906:1999 Annex A
p [kPa]
H [m]
-12
-10
-8
-5
-4
-3
-2
-1
Q [m³/h]
Q [l/s]
P2 [kW]
Eta [%]
Eta
P2
H [m]
NPSH [m]
3500 rpm
NPSH
TM05 6841 0313

Dimensional sketches

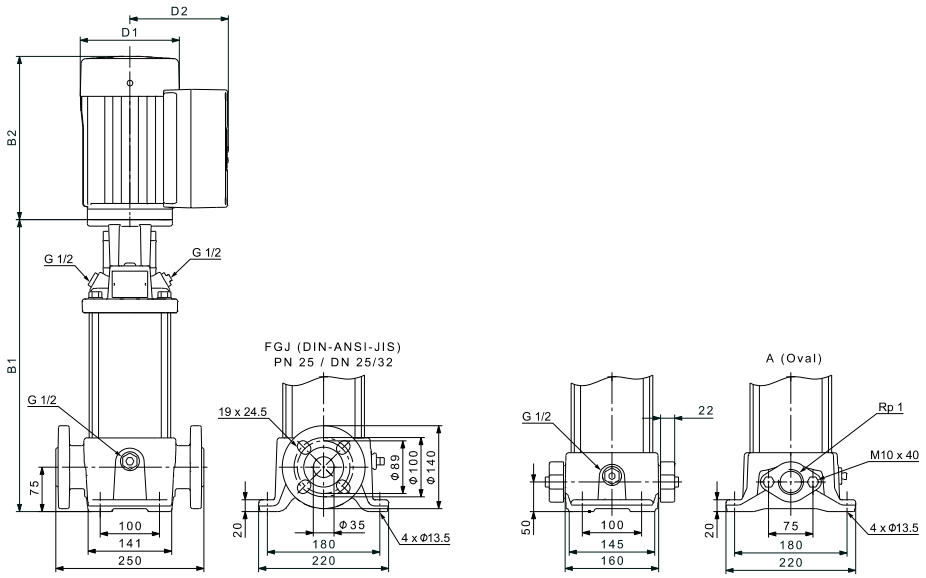

TM05 9394 3713

Dimensions and weights

Pump type	P_2 [kW]	CRE								
		Dimension [mm]							Net weight [kg]	
		PJE		DIN flange		D1	D2	D3	Oval flange	DIN flange
		B1	B1+B2	B1	B1+B2					
CRE 15-1	1.5	415	689	415	689	122	158	135	46	47
CRE 15-2	3	420	755	420	755	198	177	160	63	64
CRE 15-3	4	465	837	465	837	220	188	160	75	76
CRE 15-4	5.5	542	933	542	933	220	188	300	94	95
CRE 15-5	7.5	587	978	587	978	260	213	300	99	100
CRE 15-8	11	-	-	814	1285	314	308	350	-	191
CRE 15-10	15	-	-	904	1375	314	308	350	-	211
CRE 15-12	18.5	-	-	994	1509	314	308	350	-	226

Pumps fitted with 1.5 kW three-phase MGE motors can as an option be fitted with single-phase MGE motors.
See WinCAPS or WebCAPS for dimensions.

CRIE, CRNE 15

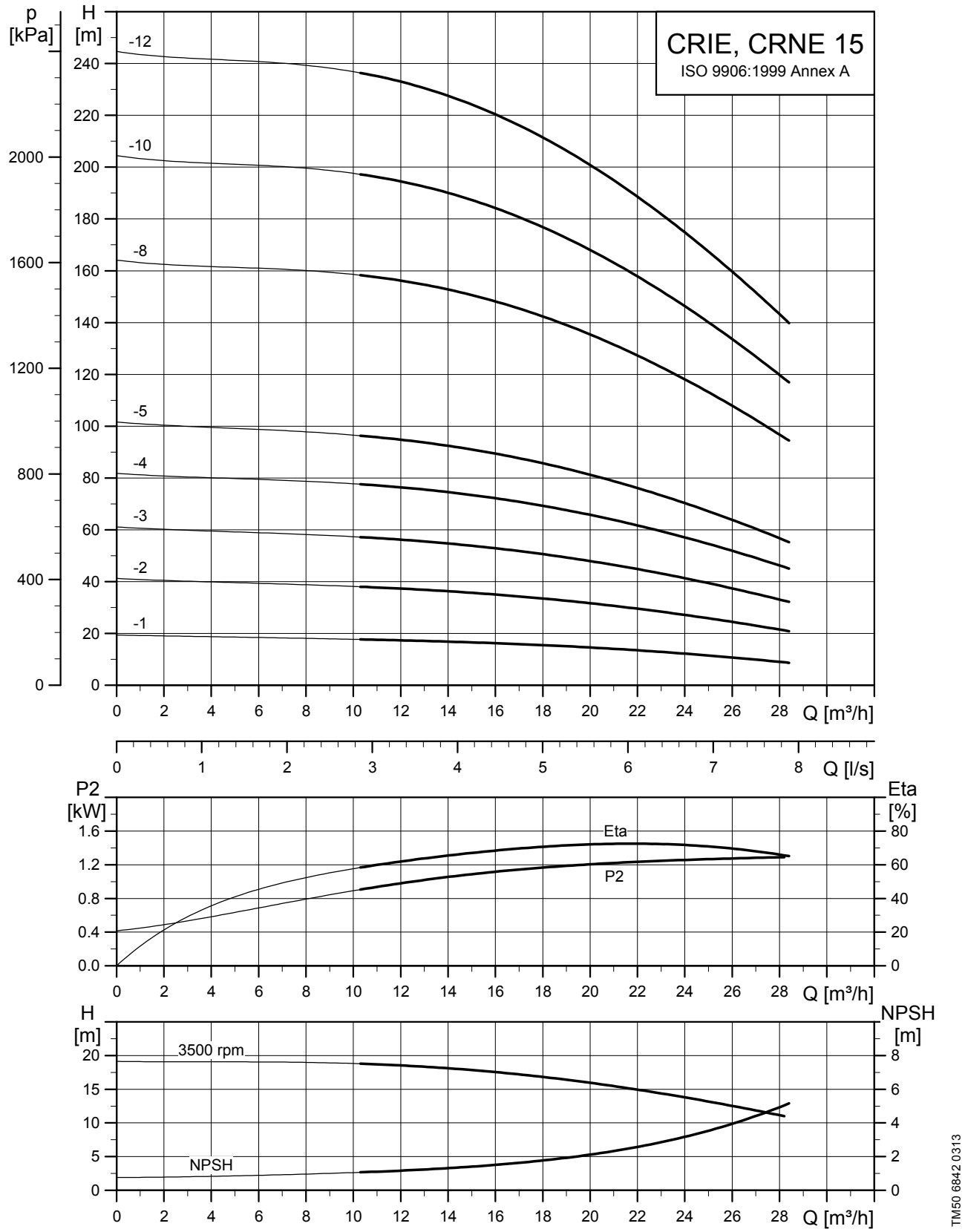
CRIE, CRNE 15
ISO 9906:1999 Annex A
p [kPa]
H [m]
-12
-10
-8
-5
-4
-3
-2
-1
Q [m³/h]
Q [l/s]
P2 [kW]
Eta [%]
Eta
P2
H [m]
NPSH [m]
3500 rpm
NPSH
TM50 6842 0313

Dimensional sketches

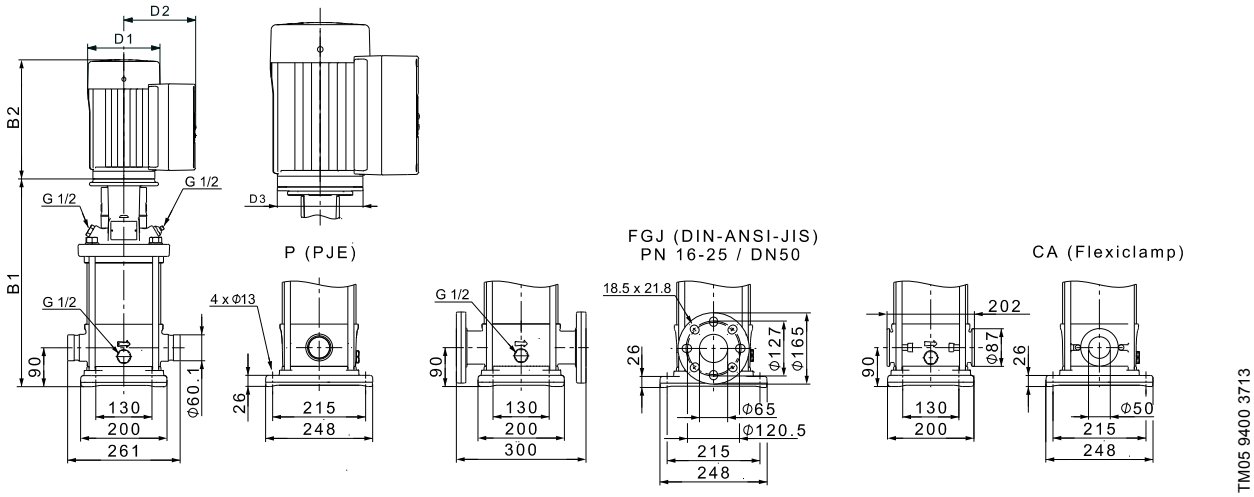

Dimensions and weights

Pump type	P_2 [kW]	CRIE/CRNE								
		Dimension [mm]							Net weight [kg]	
		PJE/CA		DIN flange		D1	D2	D3	PJE/ CA	DIN flange
		B1	B1+B2	B1	B1+B2					
CRIE/CRNE 15-1	1.5	413	687	413	687	122	158	135	39	43
CRIE/CRNE 15-2	3	418	753	418	753	198	177	160	57	61
CRIE/CRNE 15-3	4	463	835	463	835	220	188	160	69	74
CRIE/CRNE 15-4	5.5	540	931	540	931	220	188	300	87	92
CRIE/CRNE 15-5	7.5	585	976	585	976	260	213	300	92	97
CRIE/CRNE 15-8	11	812	1283	812	1283	314	308	350	184	189
CRIE/CRNE 15-10	15	902	1373	902	1373	314	308	350	203	207
CRIE/CRNE 15-12	18.5	992	1507	992	1507	314	308	350	218	223

Pumps fitted with 1.5 kW three-phase MGE motors can as an option be fitted with single-phase MGE motors.
See WinCAPS or WebCAPS for dimensions.

CRE 20

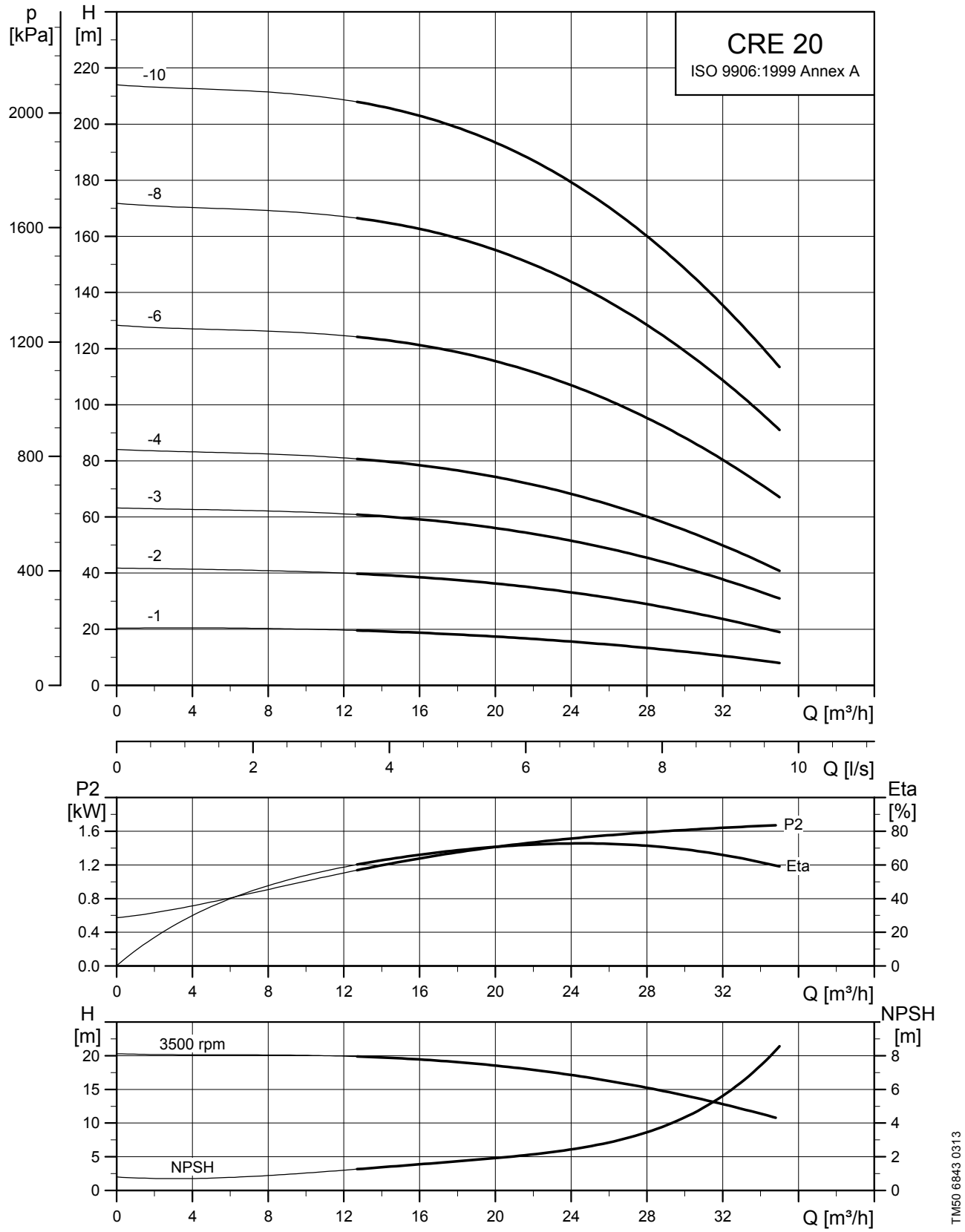
CRE 20
ISO 9906:1999 Annex A
p [kPa]
H [m]
-10
-8
-6
-4
-3
-2
-1
Q [m³/h]
Q [l/s]
P2 [kW]
Eta [%]
P2
Eta
H [m]
NPSH [m]
3500 rpm
NPSH
TM50 6843 0313

Dimensional sketches

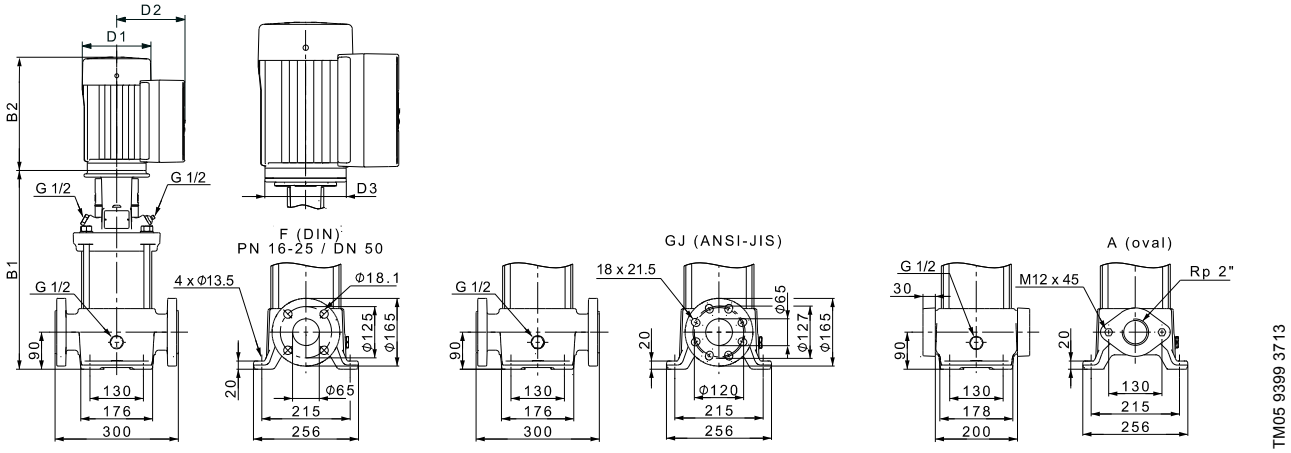

Dimensions and weights

Pump type	P_2 [kW]	CRE								
		Dimension [mm]							Net weight [kg]	
		PJE		DIN flange		D1	D2	D3	Oval flange	DIN flange
		B1	B1+B2	B1	B1+B2					
CRE 20-1	2.2	415	689	415	689	122	158	135	47	48
CRE 20-2	4	420	792	420	792	220	188	160	74	75
CRE 20-3	5.5	497	888	497	888	220	188	300	93	93
CRE 20-4	7.5	542	933	542	933	260	213	300	97	98
CRE 20-6	11	-	-	724	1195	314	308	350	-	188
CRE 20-8	15	-	-	814	1285	314	308	350	-	207
CRE 20-10	18.5	-	-	904	1419	314	308	350	-	223

CRIE, CRNE 20

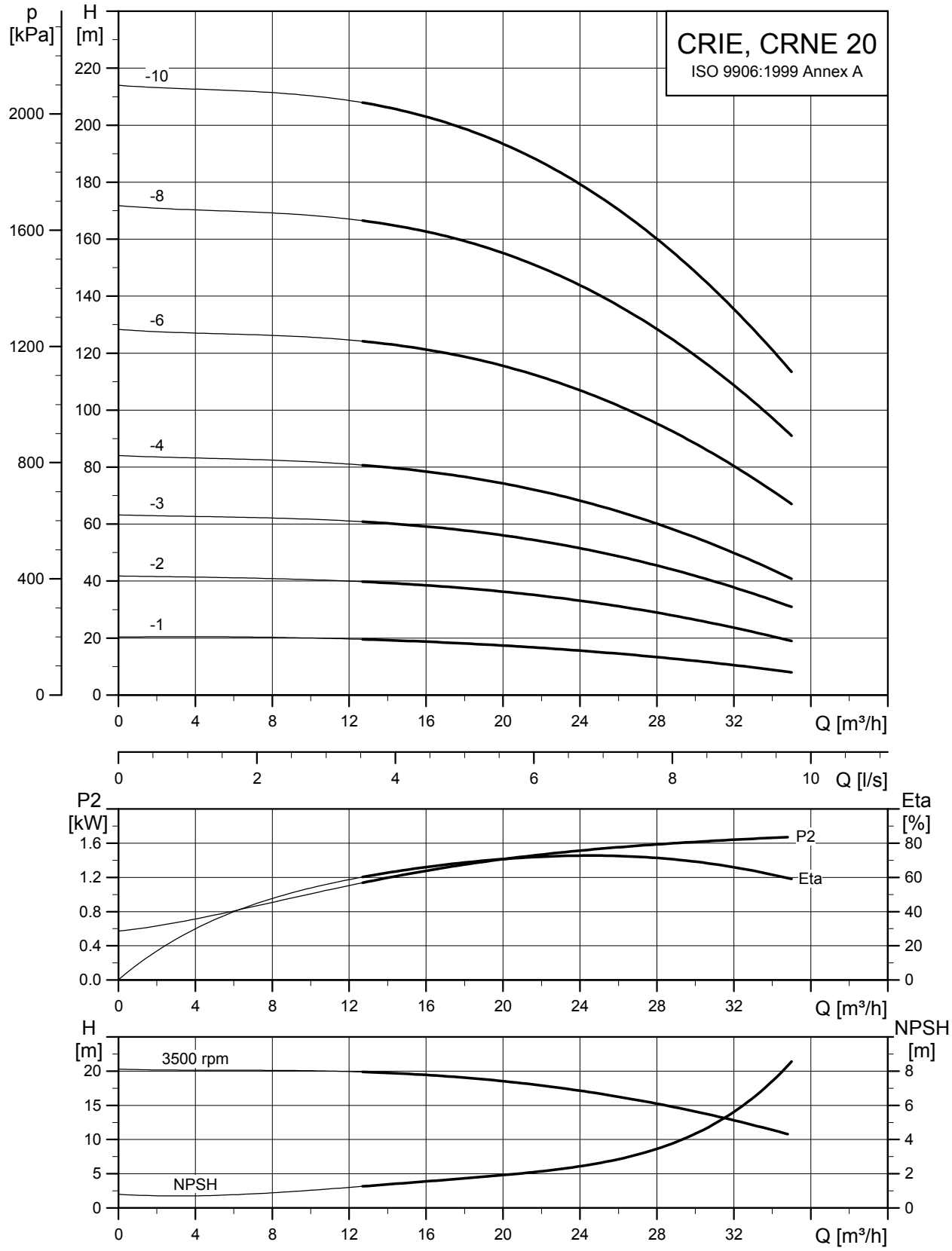
CRIE, CRNE 20
ISO 9906:1999 Annex A
p [kPa]
H [m]
-10
-8
-6
-4
-3
-2
-1
Q [m³/h]
Q [l/s]
P2 [kW]
Eta [%]
P2
Eta
H [m]
NPSH [m]
3500 rpm
NPSH
TM05 6844 0313

Dimensional sketches

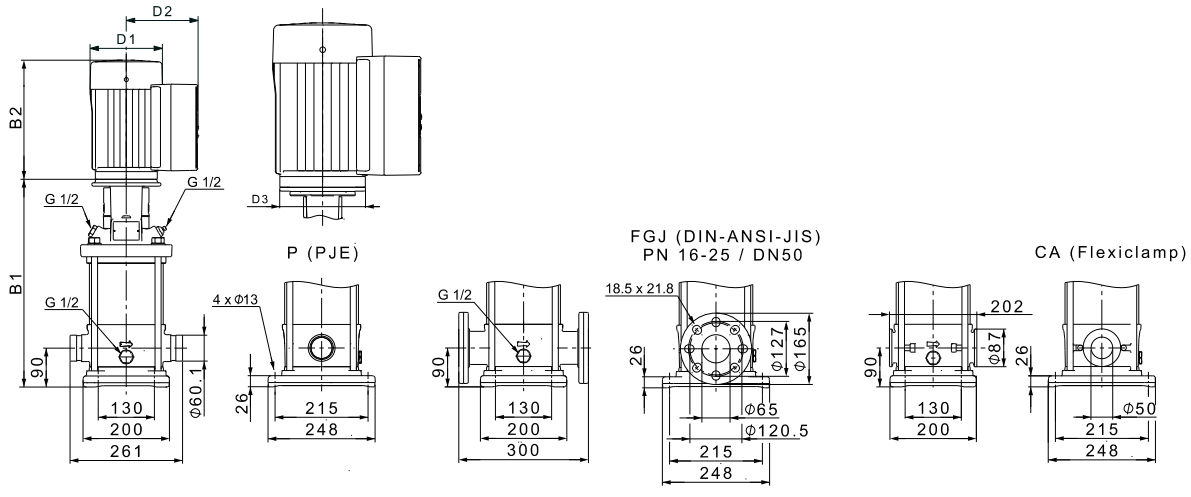

TM05 9400 3713

Dimensions and weights

Pump type	P_2 [kW]	CRIE/CRNE								
		Dimension [mm]							Net weight [kg]	
		PJE/CA		DIN flange		D1	D2	D3	PJE/ CA	DIN flange
		B1	B1+B2	B1	B1+B2					
CRIE/CRNE 20-1	2.2	413	687	413	687	122	158	135	40	45
CRIE/CRNE 20-2	4	418	790	418	790	220	188	160	68	72
CRIE/CRNE 20-3	5.5	495	886	495	886	220	188	300	86	91
CRIE/CRNE 20-4	7.5	540	931	540	931	260	213	300	91	95
CRIE/CRNE 20-6	11	722	1193	722	1193	314	308	350	181	185
CRIE/CRNE 20-8	15	812	1283	812	1283	314	308	350	199	204
CRIE/CRNE 20-10	18.5	902	1417	902	1417	314	308	350	215	219

CRE 32

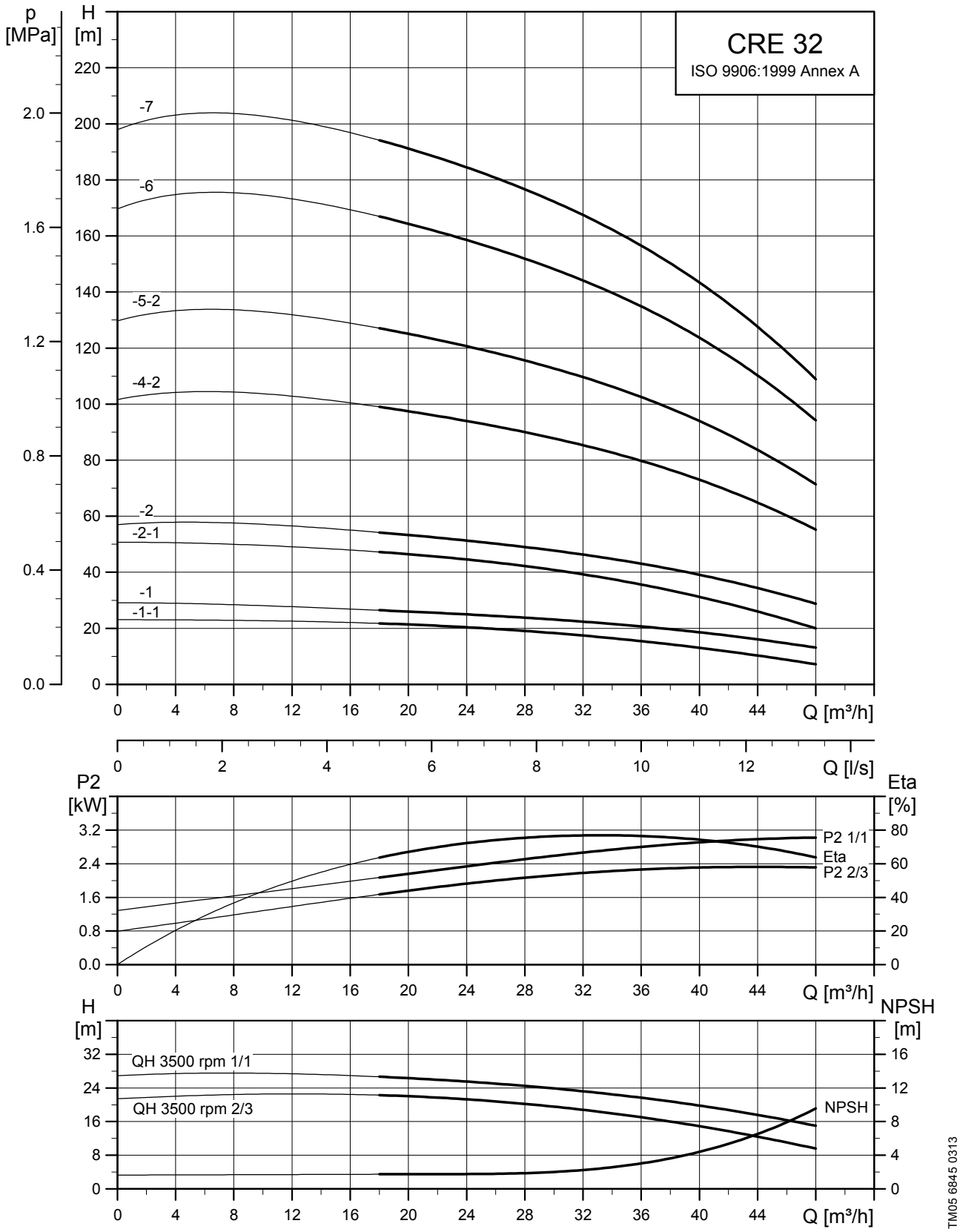
CRE 32
ISO 9906:1999 Annex A
p [MPa]
H [m]
-7
-6
-5-2
-4-2
-2
-2-1
-1
-1-1
Q [m³/h]
Q [l/s]
P2 [kW]
Eta [%]
P2 1/1
Eta
P2 2/3
H [m]
NPSH [m]
QH 3500 rpm 1/1
QH 3500 rpm 2/3
NPSH
TM05 6845 0313

Dimensional sketches

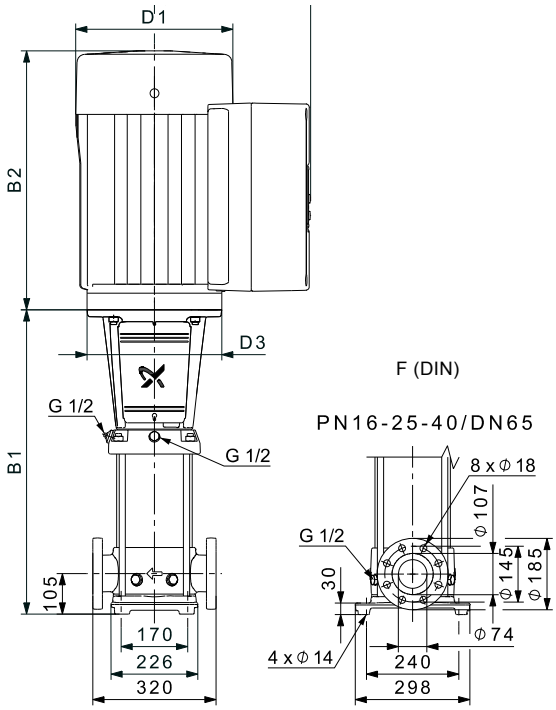

TM05 9384 3713

Dimensions and weights

Pump type	P_2 [kW]	CRE					
		Dimension [mm]					Net weight [kg]
		B1	B1+B2	D1	D2	D3	
CRE 32-1-1	2.2	505	779	122	158	135	63
CRE 32-1	3	505	840	198	177	160	78
CRE 32-2-1	5.5	575	966	220	188	300	100
CRE 32-2	7.5	575	966	260	213	300	103
CRE 32-4-2	11	825	1296	314	308	350	185
CRE 32-5-2	15	895	1366	314	308	350	203
CRE 32-6	18.5	965	1480	314	308	350	218
CRE 32-7	22	1035	1576	314	308	350	234

CRNE 32

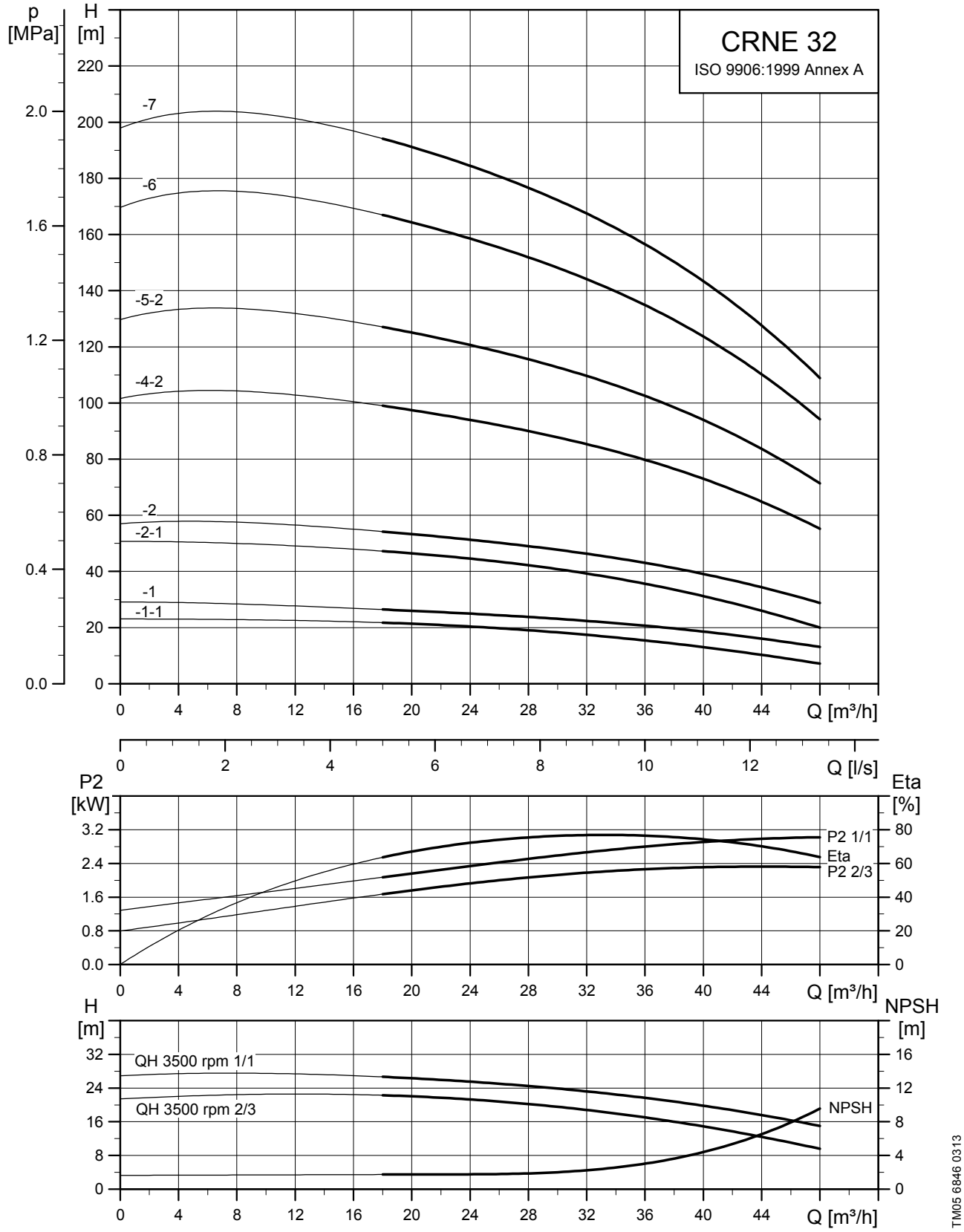
CRNE 32
ISO 9906:1999 Annex A
p [MPa]
H [m]
-7
-6
-5-2
-4-2
-2
-2-1
-1
-1-1
Q [m³/h]
Q [l/s]
P2 [kW]
Eta [%]
P2 1/1
Eta
P2 2/3
H [m]
NPSH [m]
QH 3500 rpm 1/1
QH 3500 rpm 2/3
NPSH
TM05 6846 0313

Dimensional sketches

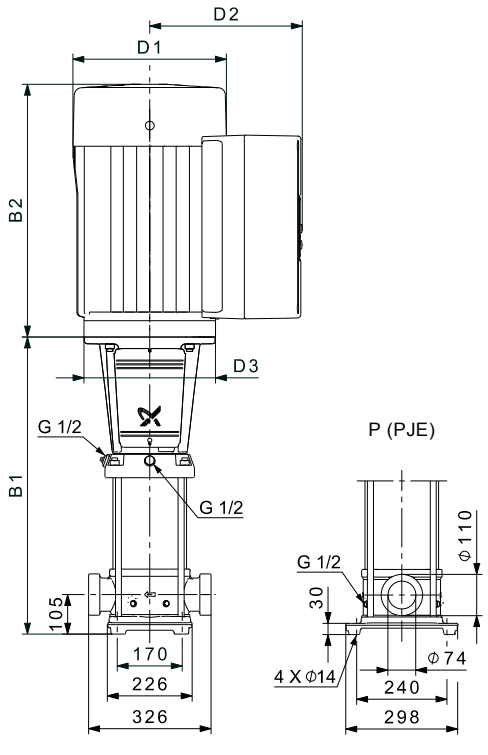

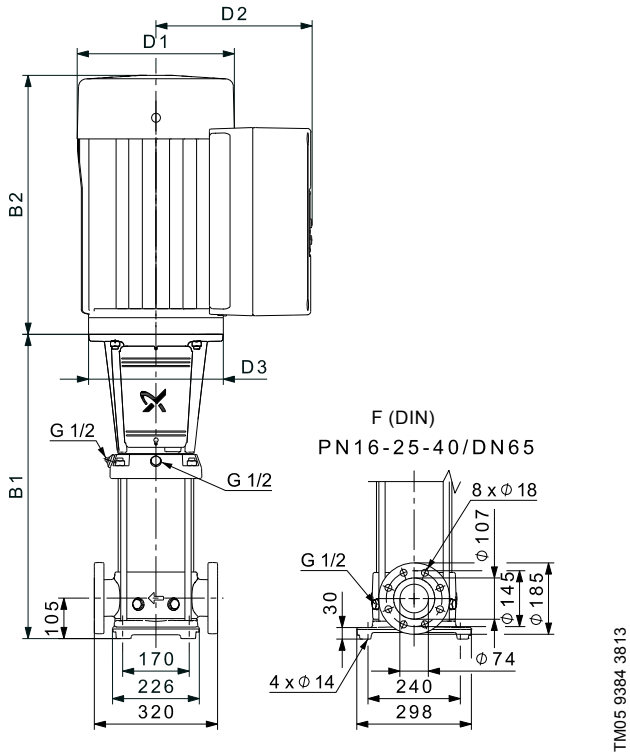

Dimensions and weights

Pump type	P_2 [kW]	CRNE								
		Dimension [mm]							Net weight [kg]	
		PJE		DIN flange		D1	D2	D3	PJE/ CA	DIN flange
		B1	B1+B2	B1	B1+B2					
CRNE 32-1-1	2.2	505	779	505	779	122	158	135	65	65
CRNE 32-1	3	505	840	505	840	198	177	160	80	80
CRNE 32-2-1	5.5	575	966	575	966	220	188	300	102	102
CRNE 32-2	7.5	575	966	575	966	260	213	300	105	105
CRNE 32-4-2	11	825	1296	825	1296	314	308	350	187	187
CRNE 32-5-2	15	895	1366	895	1366	314	308	350	205	205
CRNE 32-6	18.5	965	1480	965	1480	314	308	350	220	220
CRNE 32-7	22	1035	1576	1035	1576	314	308	350	236	236

CRE 45

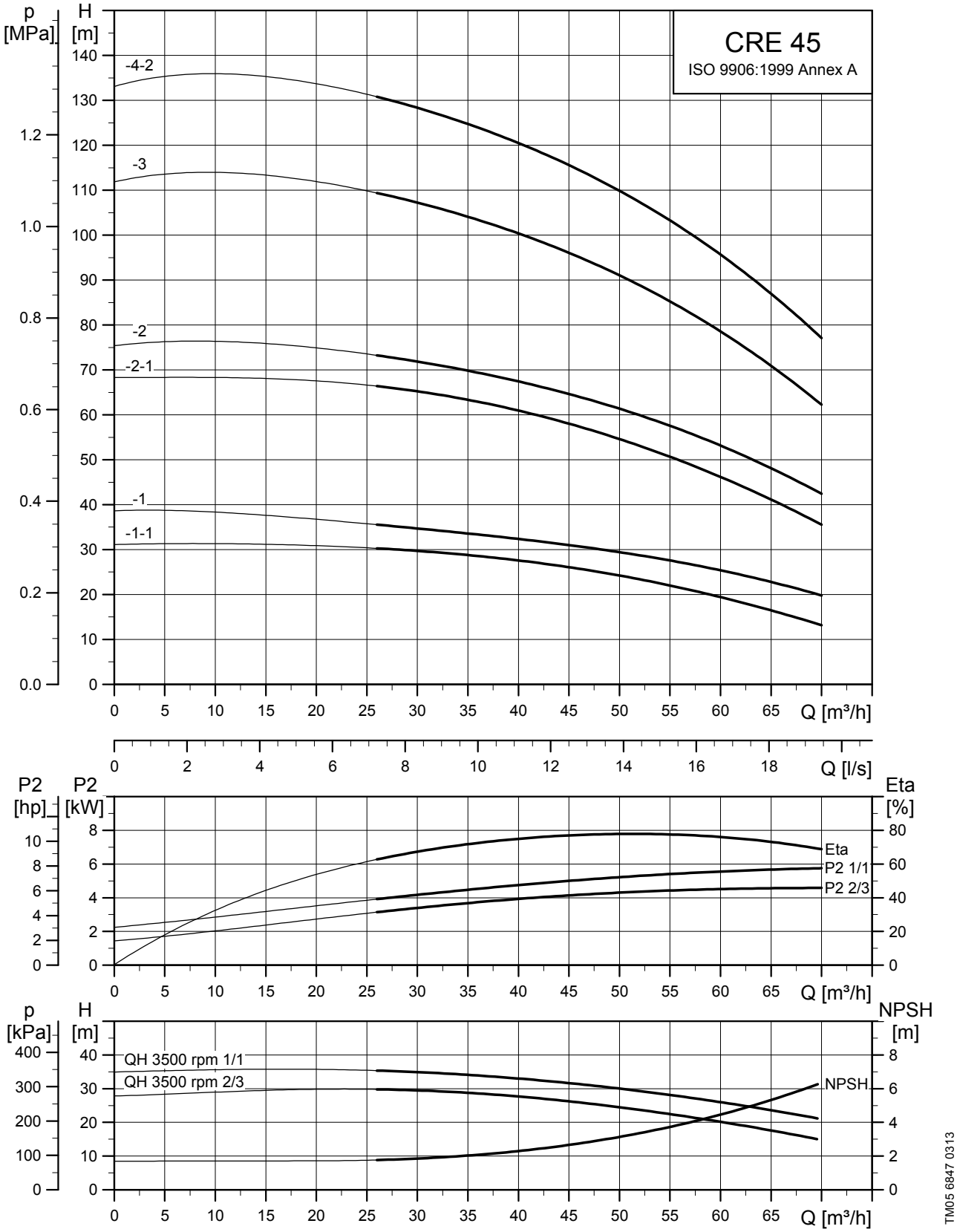
CRE 45
ISO 9906:1999 Annex A
p [MPa]
H [m]
-4-2
-3
-2
-2-1
-1
-1-1
Q [m³/h]
Q [l/s]
P2 [hp]
P2 [kW]
Eta [%]
Eta
P2 1/1
P2 2/3
p [kPa]
QH 3500 rpm 1/1
QH 3500 rpm 2/3
NPSH [m]
NPSH
TM05 6847 0313

Dimensional sketches

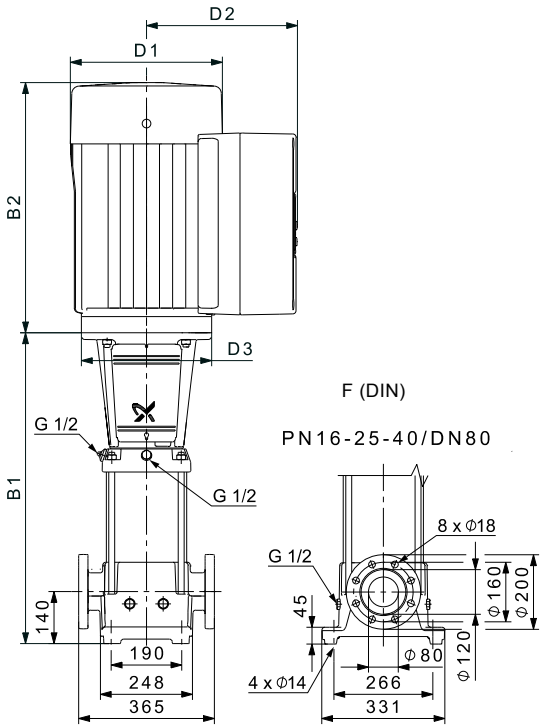

TM05 9385 3713

Dimensions and weights

Pump type	P_2 [kW]	CRE					
		Dimension [mm]					Net weight [kg]
		B1	B1+B2	D1	D2	D3	
CRE 45-1-1	5.5	559	950	220	188	300	107
CRE 45-1	7.5	559	950	260	213	300	110
CRE 45-2-2	11	749	1220	314	308	350	189
CRE 45-2-1	11	749	1220	314	308	350	189
CRE 45-2	15	749	1220	314	308	350	204
CRE 45-3	18.5	829	1344	314	308	350	220
CRE 45-4-2	22	909	1450	314	308	350	237

CRNE 45

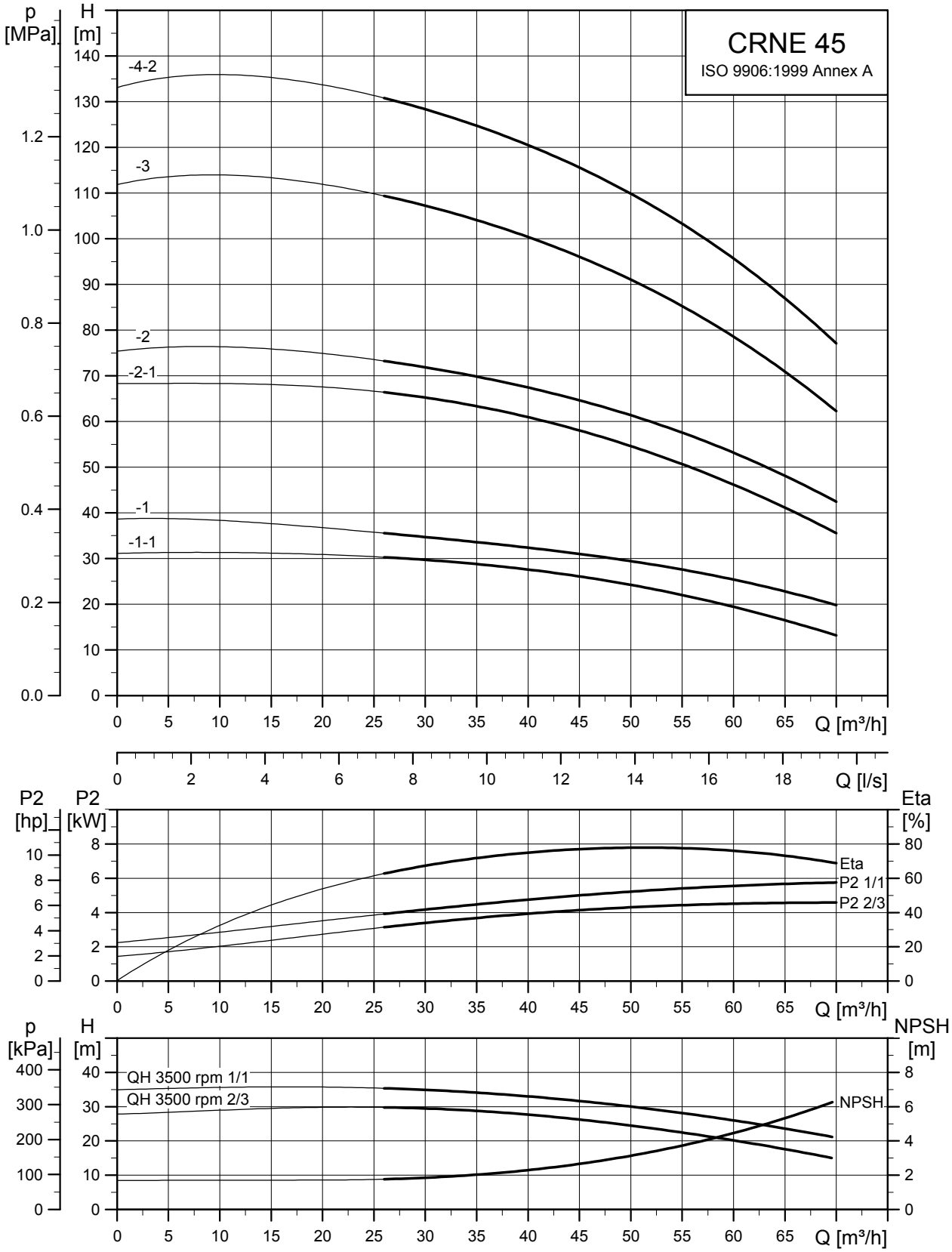
CRNE 45
ISO 9906:1999 Annex A
p [MPa]
H [m]
-4-2
-3
-2
-2-1
-1
-1-1
Q [m³/h]
Q [l/s]
P2 [hp]
P2 [kW]
Eta [%]
Eta
P2 1/1
P2 2/3
p [kPa]
H [m]
NPSH [m]
QH 3500 rpm 1/1
QH 3500 rpm 2/3
NPSH
TM05 6848 0313

Dimensional sketches

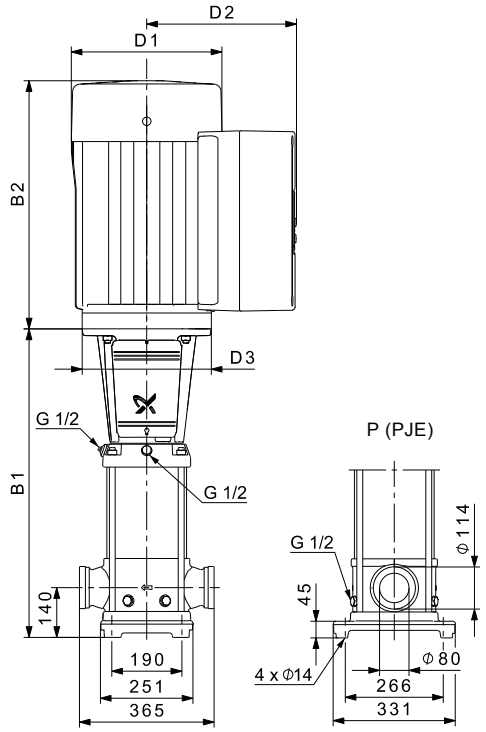

TM05 9387 3713

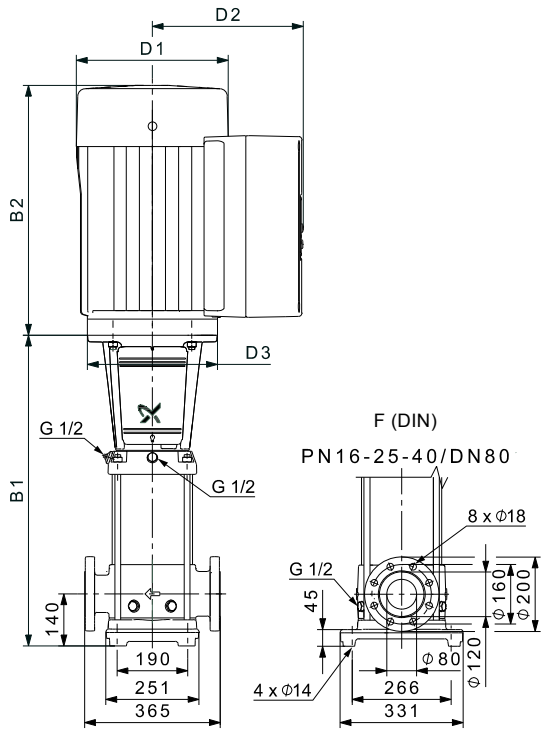

TM05 9386 3713

Dimensions and weights

Pump type	P_2 [kW]	CRNE								
		Dimension [mm]							Net weight [kg]	
		PJE		DIN flange		D1	D2	D3	PJE/ CA	DIN flange
		B1	B1+B2	B1	B1+B2					
CRNE 45-1-1	5.5	559	950	559	950	220	188	300	107	107
CRNE 45-1	7.5	559	950	559	950	260	213	300	110	110
CRNE 45-2-2	11	749	1220	749	1220	314	308	350	190	190
CRNE 45-2-1	11	749	1220	749	1220	314	308	350	190	190
CRNE 45-2	15	749	1220	749	1220	314	308	350	205	205
CRNE 45-3	18.5	829	1344	829	1344	314	308	350	221	221
CRNE 45-4-2	22	909	1450	909	1450	314	308	350	237	237

CRE 64

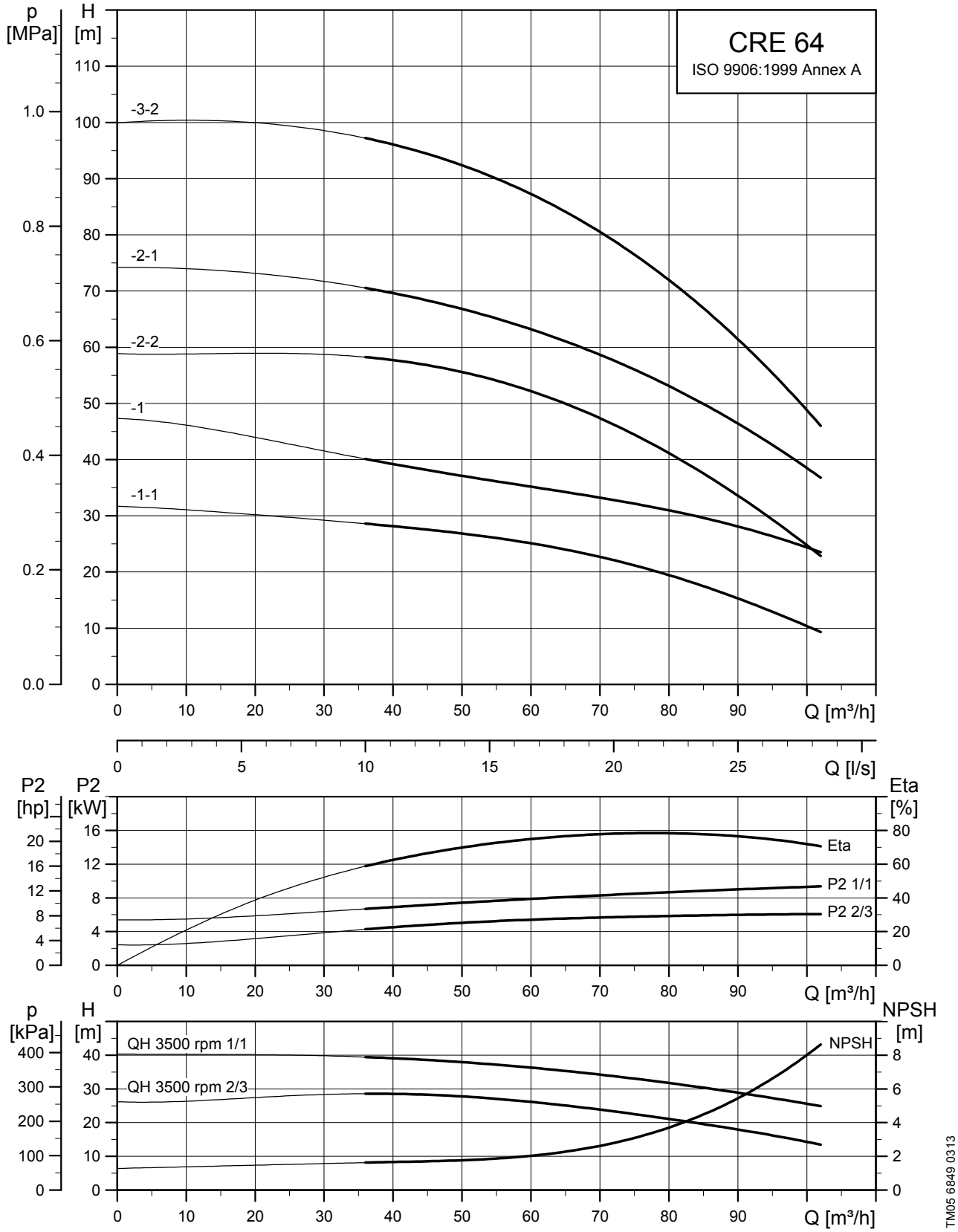
CRE 64
ISO 9906:1999 Annex A
p [MPa]
H [m]
-3-2
-2-1
-2-2
-1
-1-1
Q [m³/h]
Q [l/s]
P2 [hp]
P2 [kW]
Eta [%]
Eta
P2 1/1
P2 2/3
p [kPa]
QH 3500 rpm 1/1
QH 3500 rpm 2/3
NPSH [m]
NPSH
TM05 6849 0313

Dimensional sketches

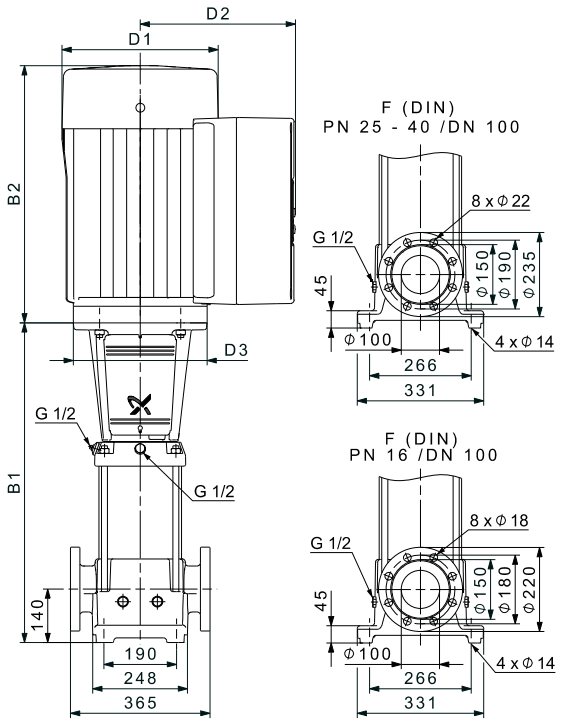

TM05 9388 3713

Dimensions and weights

Pump type	P_2 [kW]	CRE					
		Dimension [mm]					Net weight [kg]
		B1	B1+B2	D1	D2	D3	
CRE 64-1-1	7.5	561	952	260	213	300	112
CRE 64-1	11	671	1142	314	308	350	188
CRE 64-2-2	15	754	1225	314	308	350	207
CRE 64-2-1	18.5	754	1269	314	308	350	219
CRE 64-3-2	22	836	1377	314	308	350	237

CRNE 64

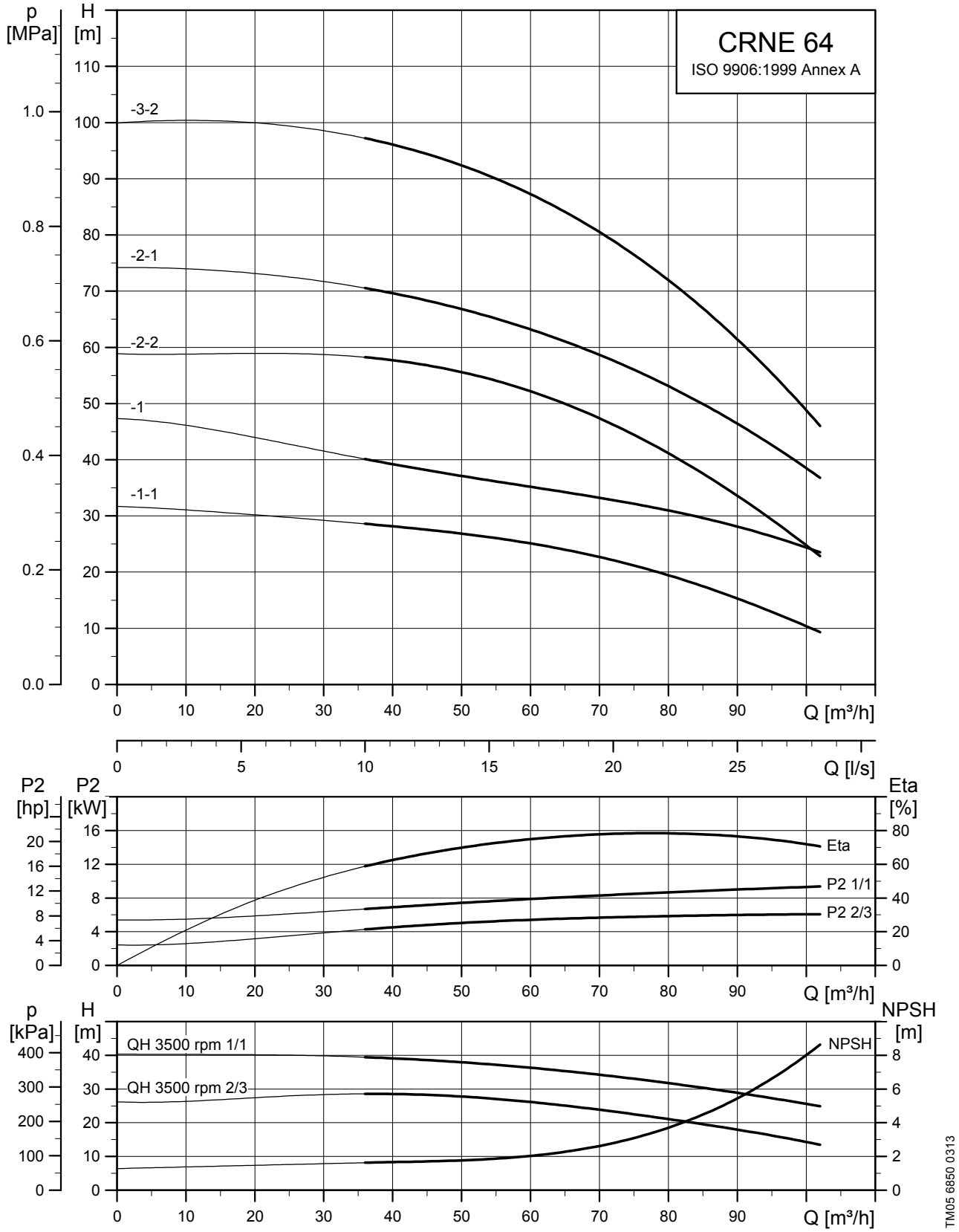
CRNE 64
ISO 9906:1999 Annex A
p [MPa]
H [m]
-3-2
-2-1
-2-2
-1
-1-1
Q [m³/h]
Q [l/s]
P2 [hp]
P2 [kW]
Eta [%]
Eta
P2 1/1
P2 2/3
p [kPa]
QH 3500 rpm 1/1
QH 3500 rpm 2/3
NPSH [m]
NPSH
TM05 6850 0313

Dimensional sketches

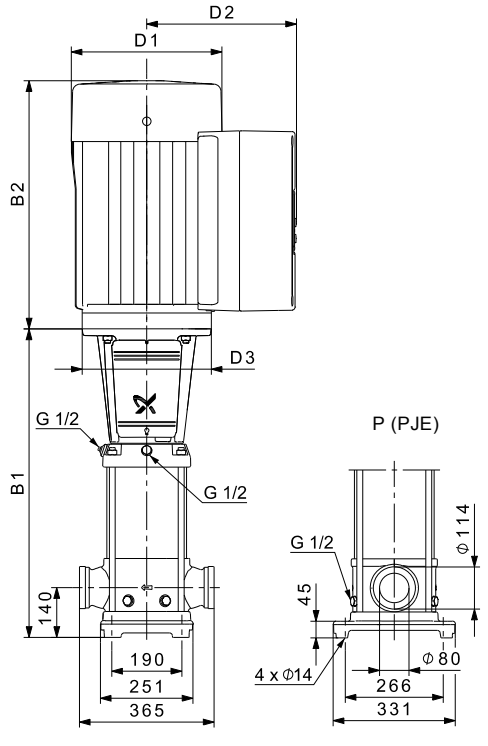

TM05 9387 3813

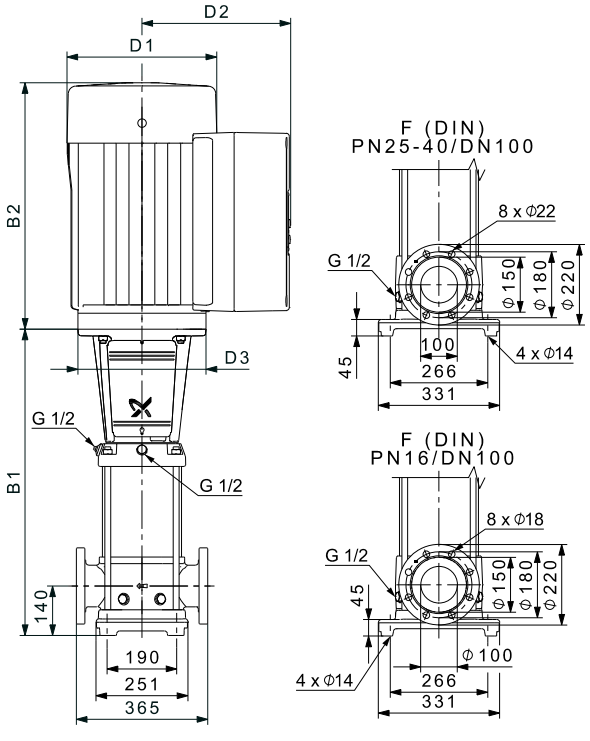

TM05 9390 3713

Dimensions and weights

Pump type	P_2 [kW]	CRNE								
		Dimension [mm]							Net weight [kg]	
		PJE		DIN flange		D1	D2	D3	PJE/ CA	DIN flange
		B1	B1+B2	B1	B1+B2					
CRNE 64-1-1	7.5	561	952	561	952	260	213	300	112	112
CRNE 64-1	11	671	1142	671	1142	314	308	350	188	188
CRNE 64-2-2	15	754	1225	754	1225	314	308	350	207	207
CRNE 64-2-1	18.5	754	1269	754	1269	314	308	350	219	219
CRNE 64-3-2	22	836	1377	836	1377	314	308	350	236	236

CRE 90

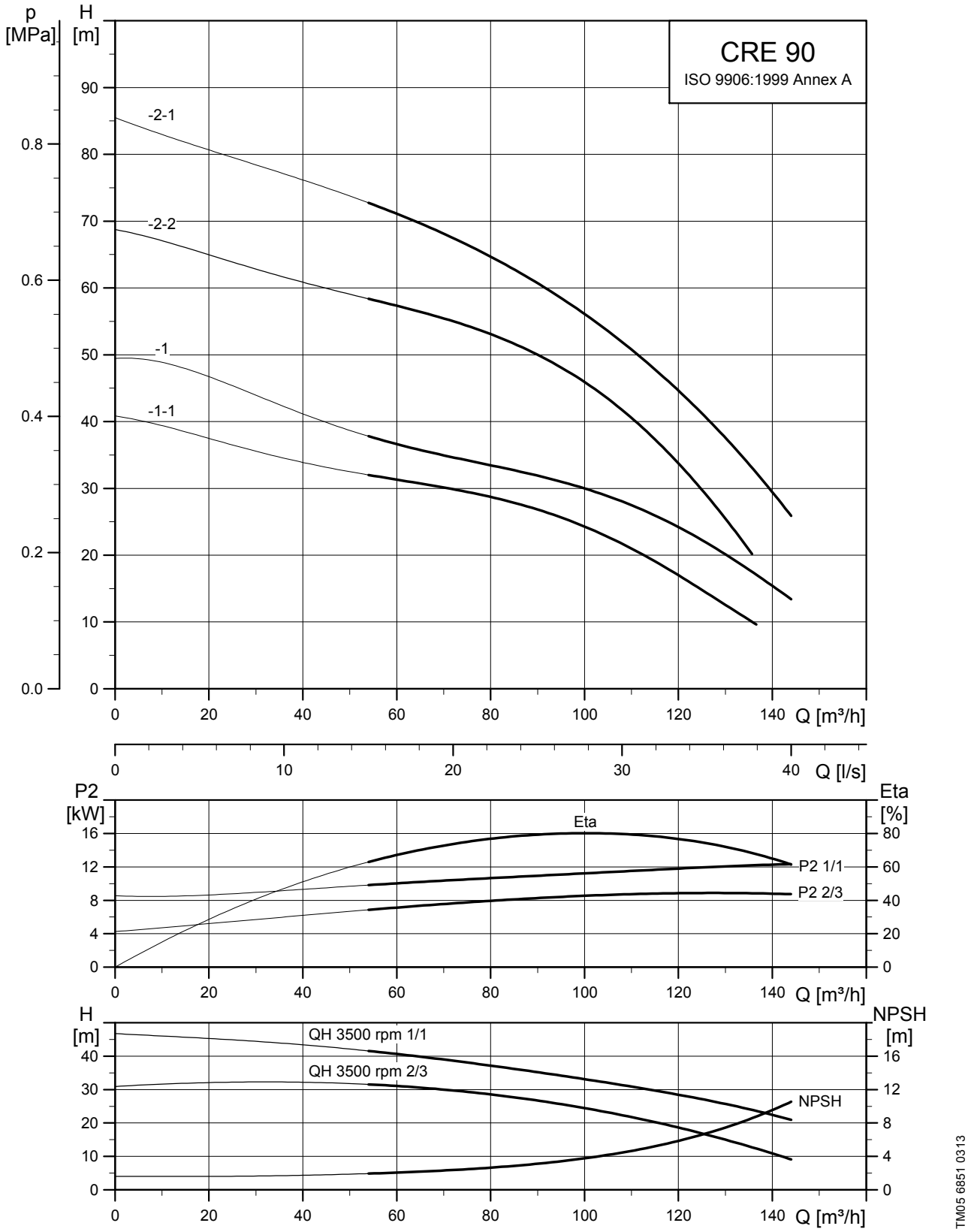
CRE 90
ISO 9906:1999 Annex A
p [MPa]
H [m]
-2-1
-2-2
-1
-1-1
Q [m³/h]
Q [l/s]
P2 [kW]
Eta [%]
Eta
P2 1/1
P2 2/3
H [m]
NPSH [m]
QH 3500 rpm 1/1
QH 3500 rpm 2/3
NPSH
TM05 6851 0313

Dimensional sketches

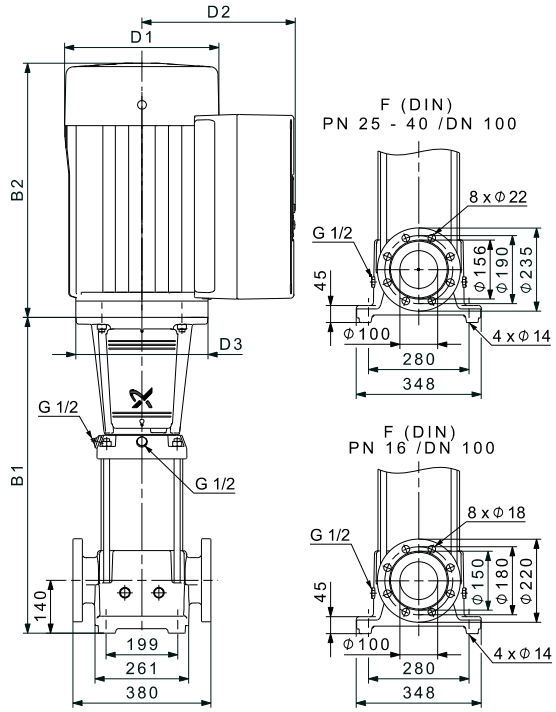

TM05 9391 3713

Dimensions and weights

Pump type	P_2 [kW]	CRE					
		Dimension [mm]					Net weight [kg]
		B1	B1+B2	D1	D2	D3	
CRE 90-1-1	11	681	1152	314	308	350	193
CRE 90-1	15	681	1152	314	308	350	208
CRE 90-2-2	18.5	773	1288	314	308	350	225
CRE 90-2-1	22	773	1314	314	308	350	237

CRNE 90

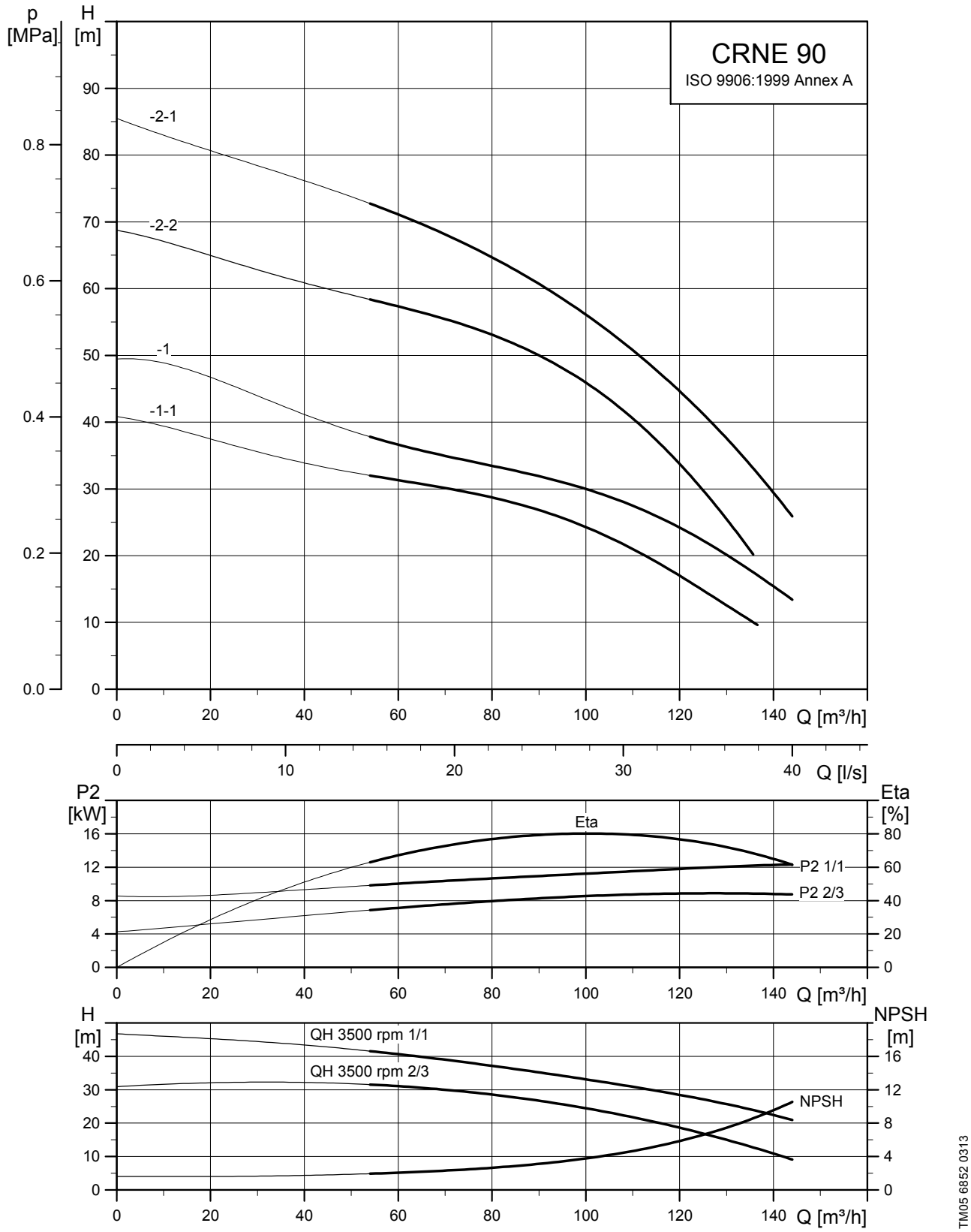
CRNE 90
ISO 9906:1999 Annex A
p [MPa]
H [m]
-2-1
-2-2
-1
-1-1
Q [m³/h]
Q [l/s]
P2 [kW]
Eta [%]
Eta
P2 1/1
P2 2/3
H [m]
NPSH [m]
QH 3500 rpm 1/1
QH 3500 rpm 2/3
NPSH
TM05 6852 0313

Dimensional sketches

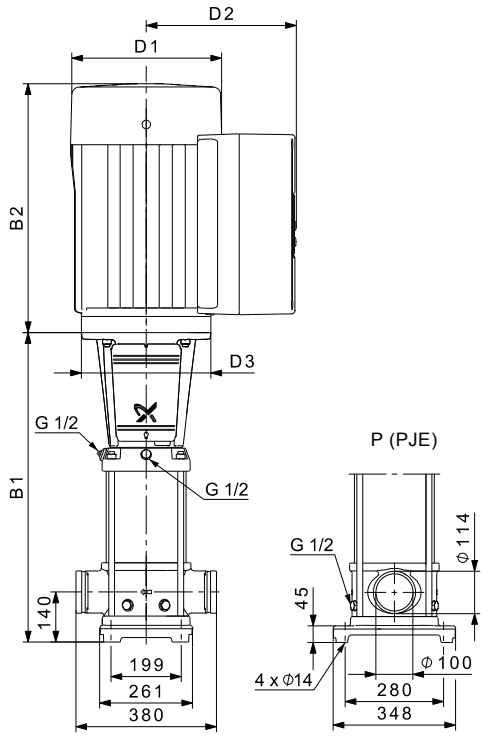

TM05 9473 3513

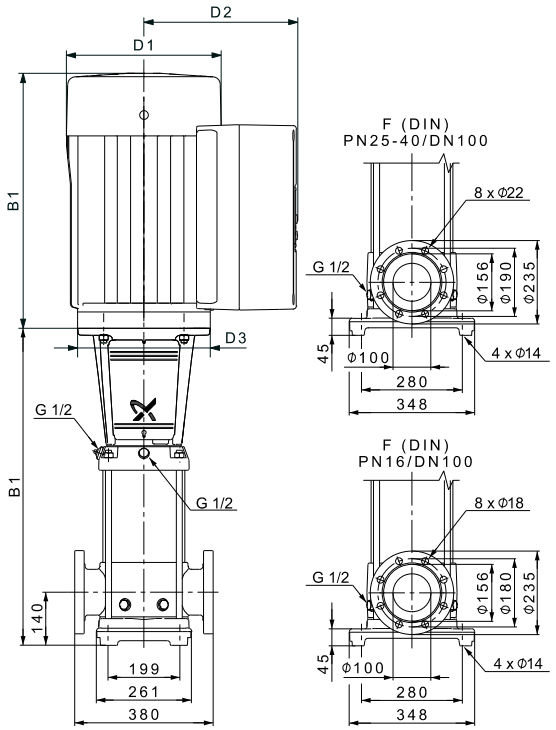

TM05 9402 3713

Dimensions and weights

Pump type	P_2 [kW]	CRNE								
		Dimension [mm]							Net weight [kg]	
		PJE		DIN flange		D1	D2	D3	PJE/ CA	DIN flange
		B1	B1+B2	B1	B1+B2					
CRNE 90-1-1	11	681	1152	681	1152	314	308	350	194	194
CRNE 90-1	15	681	1152	681	1152	314	308	350	209	209
CRNE 90-2-2	18.5	773	1288	773	1288	314	308	350	226	226
CRNE 90-2-1	22	773	1314	773	1314	314	308	350	239	239

CRE 120

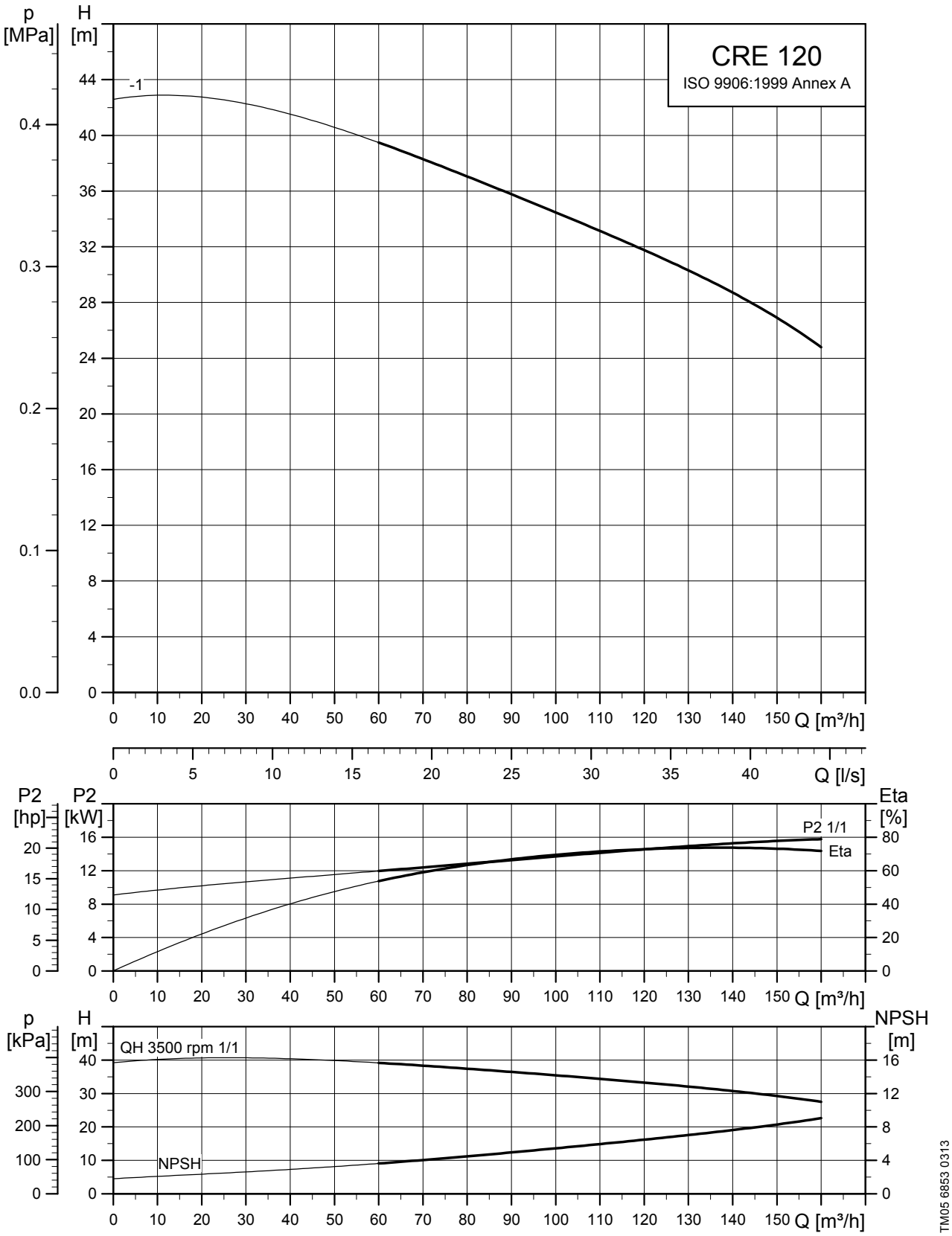
CRE 120
ISO 9906:1999 Annex A
p [MPa]
H [m]
-1
Q [m³/h]
Q [l/s]
P2 [hp]
P2 [kW]
Eta [%]
P2 1/1
Eta
p [kPa]
H [m]
NPSH [m]
QH 3500 rpm 1/1
NPSH
TM05 6853 0313

Dimensional sketches

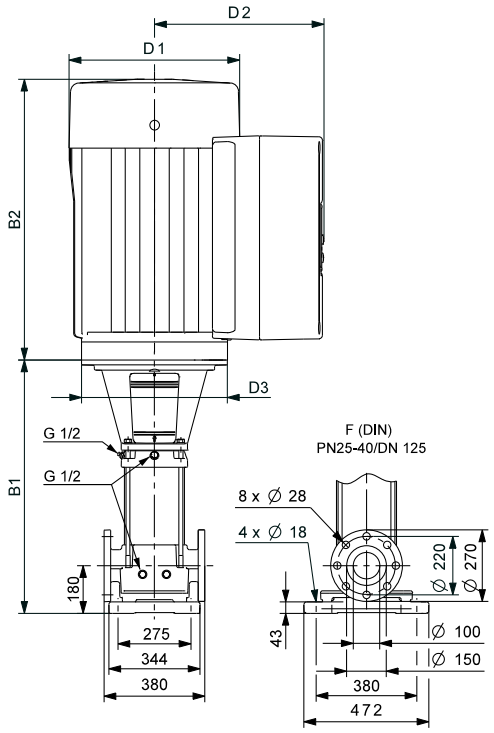

TM05 9392 3713

Dimensions and weights

Pump type	P_2 [kW]	CRE					
		Dimension [mm]					Net weight [kg]
		B1	B1+B2	D1	D2	D3	
CRE 120-1	18.5	834	1349	314	308	350	248

CRNE 120

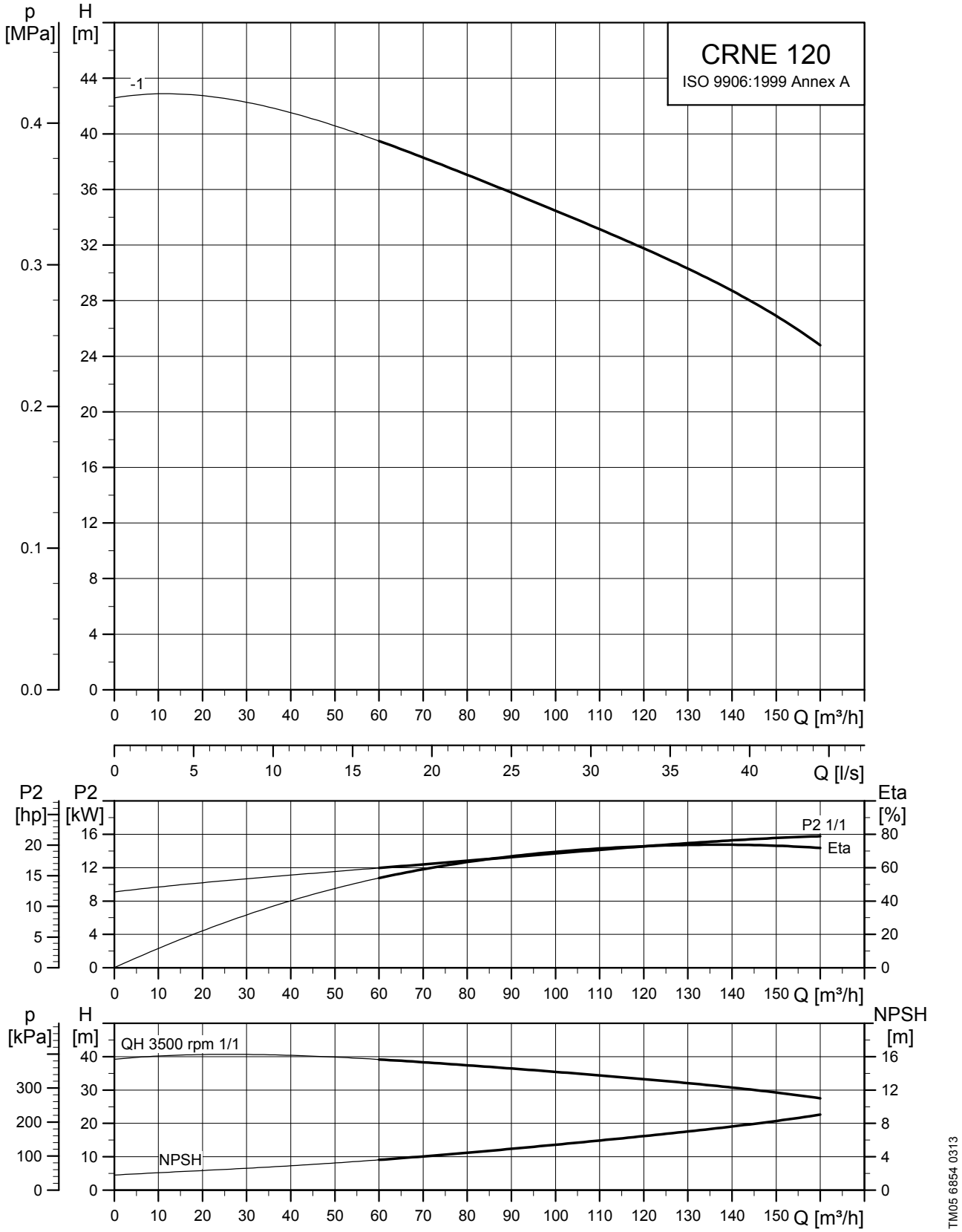
CRNE 120
ISO 9906:1999 Annex A
p [MPa]
H [m]
-1
Q [m³/h]
Q [l/s]
P2 [hp]
P2 [kW]
Eta [%]
P2 1/1
Eta
p [kPa]
H [m]
NPSH [m]
QH 3500 rpm 1/1
NPSH
TM05 6854 0313

Dimensional sketches

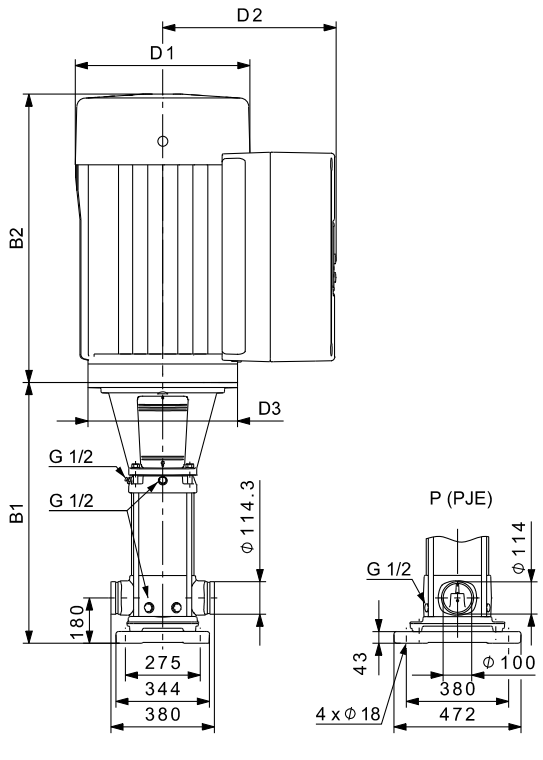

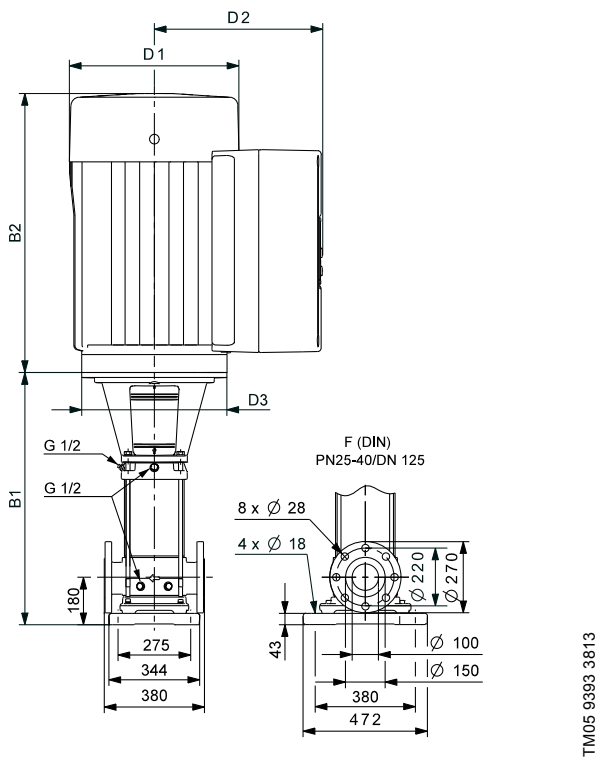

Dimensions and weights

Pump type	P_2 [kW]	CRNE Dimension [mm]					Net weight [kg]
		B1	B1+B2	D1	D2	D3	
CRNE 120-1	18.5	834	1349	314	204	350	221

CRE 150

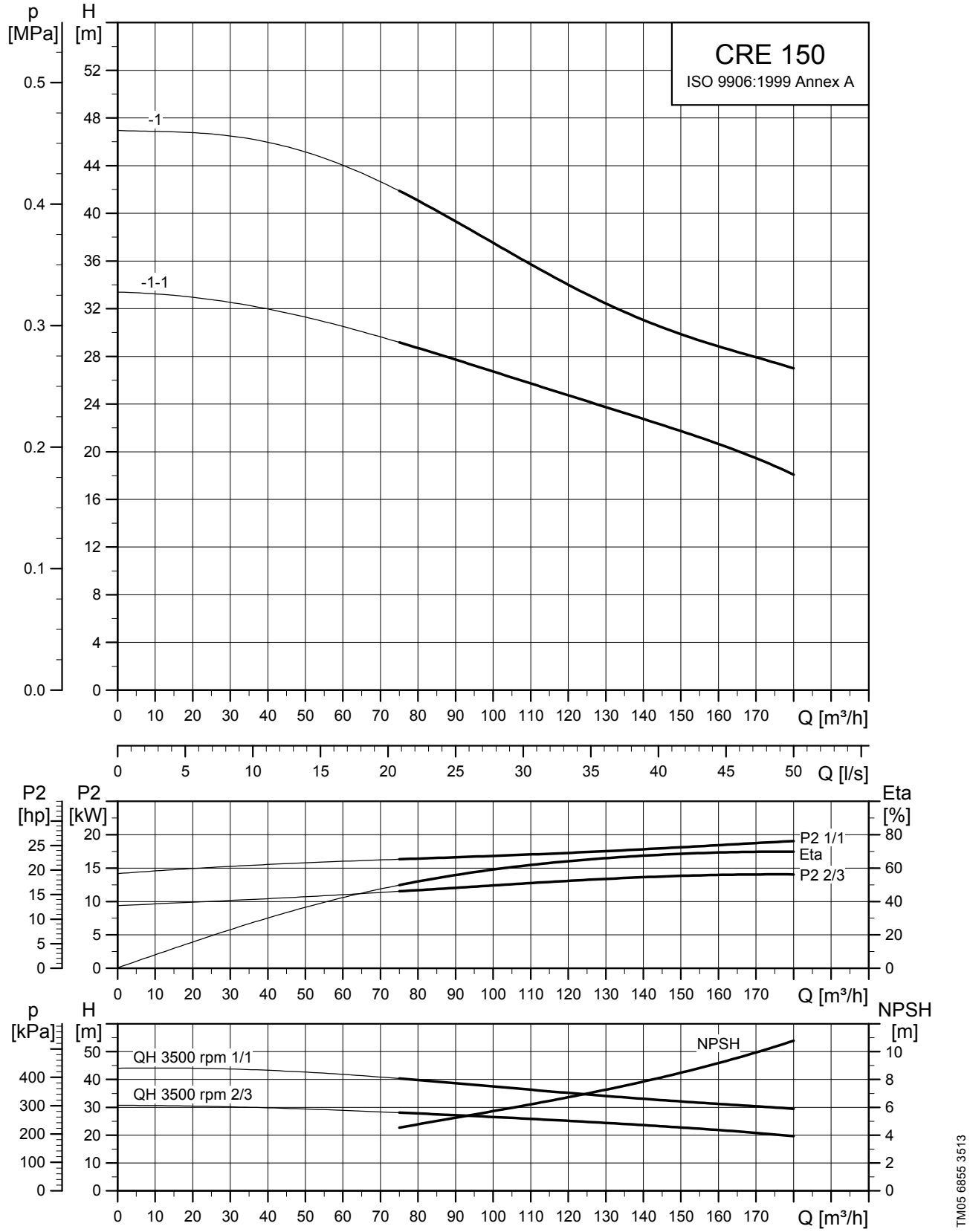
CRE 150
ISO 9906:1999 Annex A
p [MPa]
H [m]
-1
-1-1
Q [m³/h]
Q [l/s]
P2 [hp]
P2 [kW]
Eta [%]
P2 1/1
Eta
P2 2/3
p [kPa]
H [m]
NPSH [m]
QH 3500 rpm 1/1
QH 3500 rpm 2/3
NPSH
TM05 6855 3513

Dimensional sketches

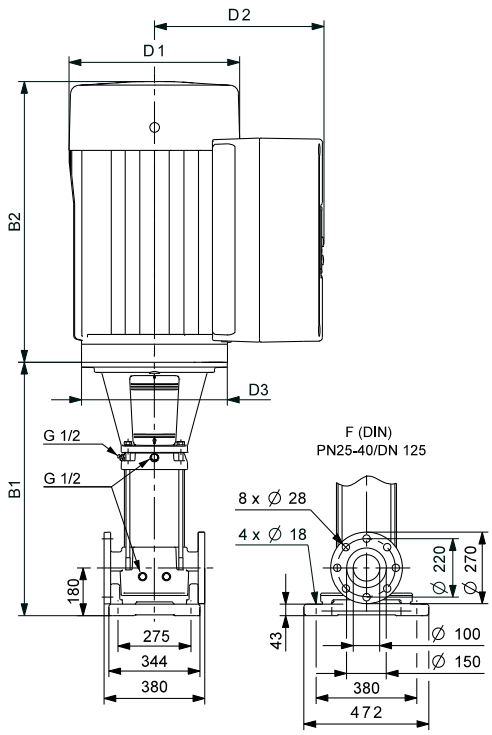

TM05 9392 3713

Dimensions and weights

Pump type	P_2 [kW]	CRE					
		Dimension [mm]					Net weight [kg]
		B1	B1+B2	D1	D2	D3	
CRE 150-1-1	18.5	834	1349	314	308	350	248
CRE 150-1	22	834	1375	314	308	350	261

CRNE 150

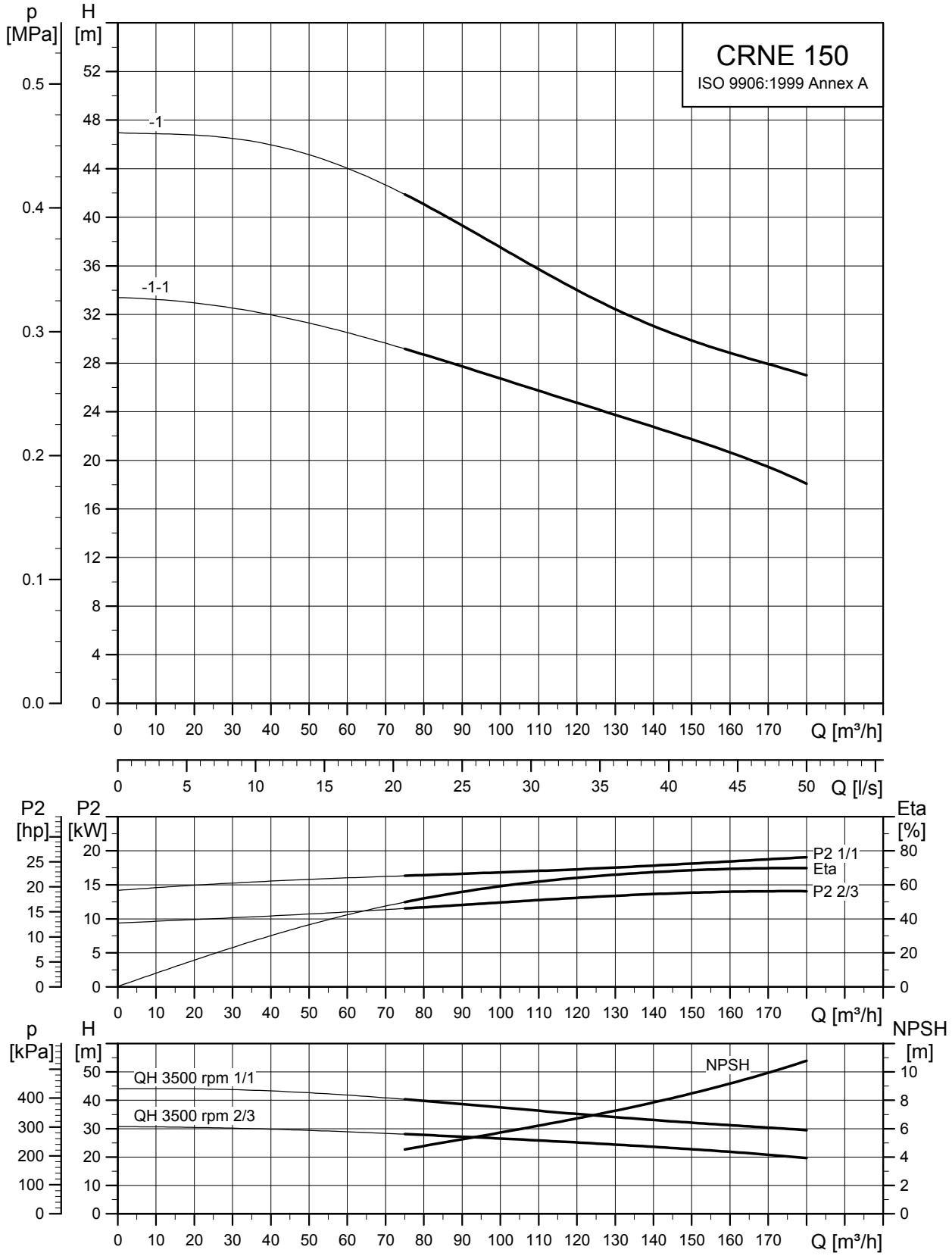
CRNE 150
ISO 9906:1999 Annex A
p [MPa]
H [m]
-1
-1-1
Q [m³/h]
Q [l/s]
P2 [hp]
P2 [kW]
Eta [%]
P2 1/1
Eta
P2 2/3
p [kPa]
H [m]
NPSH [m]
QH 3500 rpm 1/1
QH 3500 rpm 2/3
NPSH
TM05 6856 3513

Dimensional sketches

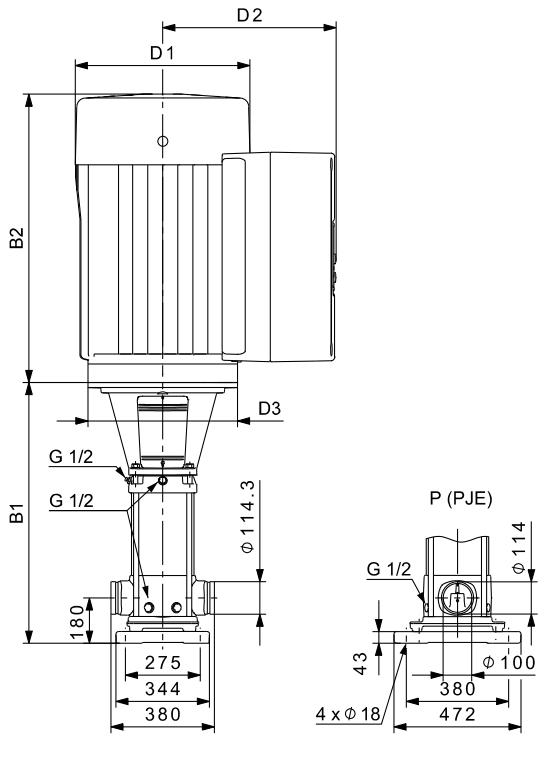

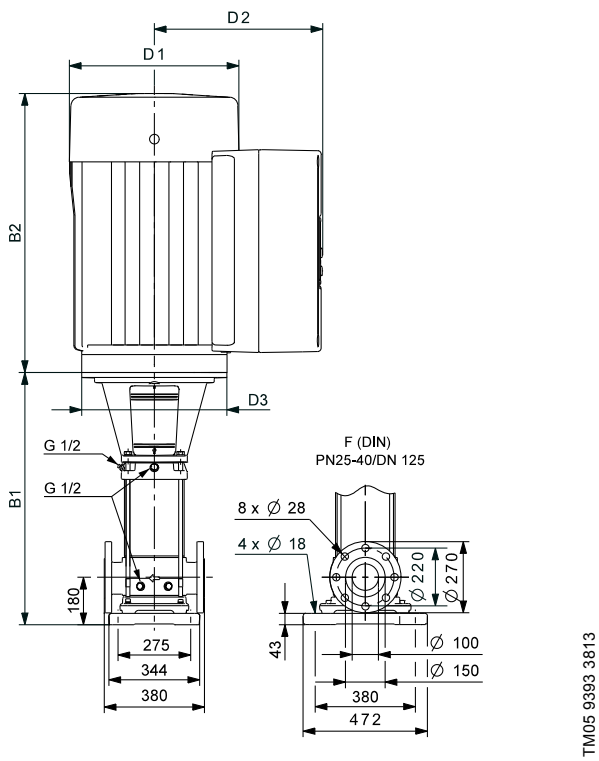

Dimensions and weights

Pump type	P_2 [kW]	CRNE					
		Dimension [mm]					Net weight [kg]
		B1	B1+B2	D1	D2	D3	
CRNE 150-1-1	18.5	834	1349	314	204	350	221
CRNE 150-1	22	834	1375	314	204	350	235

8. Motor data

E-motors for CRE, CRIE, CRNE, 50/60 Hz

Motor P2 [kW]	Frame size	Phase	Standard voltage [V]	$I_{1/1}$ [A]	Cos $\varphi_{1/1}$	Efficiency class	η [%]	MGE
0.37	71			1.9 - 2.3	0.98	-	81.0	
0.55	71			2.8 - 3.3	0.99	-	86.7	
0.75	80	1	200-240	3.8 - 4.5	0.99	-	85.0	
1.1	80			5.4 - 6.5	0.99	-	87.2	
1.5**	90			7.3 - 8.7	1.00	-	86.5	
0.37*	71			0.7 - 0.8	0.73 - 0.85		83.0	
0.55*	71			1.0 - 1.1	0.76 - 0.87		84.0	
0.75*	80	3	380-500	1.3 - 1.5	0.79 - 0.89	IE3	86.0	
1.1*	80			1.8 - 2.1	0.82 - 0.91		88.5	
1.5	90			2.3 - 2.8	0.85 - 0.92		88.0	
2.2	90			3.3 - 4.0	0.88 - 0.93		90.7	
3.0	100			6.2 - 5.0	0.94 - 0.92		83.0	
4.0	112			8.1 - 6.6	0.94 - 0.92		85.0	
5.5	132			11.0 - 8.8	0.94 - 0.93		86.9	
7.5	132	3	380-480	14.8 - 11.6	0.94 - 0.95	IE3	91.3	
11	132			22.5 - 18.8	0.90 - 0.90		91.7	
15	160			30.0 - 26.0	0.91 - 0.86		92.2	
18.5	160			37.0 - 31.0	0.91 - 0.88		92.1	
22	180			43.5 - 35.0	0.91 - 0.90		91.3	


TM03 1712 2805

* Pumps are normally fitted with single-phase MGE motors. Previous dimension tables show pumps with single-phase MGE motors.

** Pumps are normally fitted with three-phase MGE motors. Previous dimension tables show pumps with three-phase MGE motors.

9. Pumped liquids

The pumps are suitable for thin, non-explosive liquids, not containing solid particles or fibres. The liquid must not chemically attack the pump materials.

When pumping liquids with a density and/or viscosity higher than that of water, use oversized motors, if required.

Whether a pump is suitable for a particular liquid depends on a number of factors of which the most important are the chloride content, pH value, temperature and content of chemicals and oils.

Please note that aggressive liquids, such as sea water and some acids, may attack or dissolve the protective oxide film of the stainless steel and thus cause corrosion.

CRE and CRIE

CRE and CRIE pumps are suitable for non-corrosive liquids.

Use CRE or CRIE pumps for liquid transfer, circulation and pressure boosting of cold or hot clean water.

CRNE

CRNE pumps are suitable for industrial liquids.

Use CRNE pumps in systems where all parts in contact with the liquid must be made of high-grade stainless steel.

CRTE

For saline or chloride-containing liquids such as sea water or for oxidising agents such as hypochlorites, we offer CRTE pumps made of titanium.

See the separate data booklet on CRTE available on www.grundfos.com (WebCAPS).

List of pumped liquids

A number of typical liquids are listed on the next page.

Other pump versions may be applicable, but those stated in the list are considered to be the best choices.

The table is intended as a general guide only and cannot replace actual testing of the pumped liquids and pump materials under specific operating conditions.

However, use the list with some caution. Factors such as those mentioned below may affect the chemical resistance of a specific pump version:

- concentration of the pumped liquid
- liquid temperature
- pressure.

Take safety precautions when pumping dangerous liquids.

Notes

D	Often with additives.
E	The density and/or viscosity differ from that/those of water. Take this factor into account when calculating motor output and pump performance.
F	Pump selection depends on many factors. Contact Grundfos.
H	Risk of crystallisation/precipitation in shaft seal.
1	Highly flammable liquid.
2	Combustible liquid.
3	Insoluble in water.
4	Low self-ignition point.

Pumped liquid	Chemical formula	Note	Liquid concentration, liquid temperature	CRE, CRIE	CRNE
Acetic acid	CH_3COOH	-	5 %, 20 °C	-	HQQE
Acetone	CH_3COCH_3	1, F	100 %, 20 °C	-	HQQE
Alkaline degreasing agent		D, F	-	HQQE	-
Ammonium bicarbonate	NH_4HCO_3	E	20 %, 30 °C	-	HQQE
Ammonium hydroxide	NH_4OH	-	20 %, 40 °C	HQQE	-
Aviation fuel		1, 3, 4, F	100 %, 20 °C	HQBV	-
Benzoic acid	C_6H_5COOH	H	0.5 %, 20 °C	-	HQQV
Boiler water		-	< 120 °C	HQQE	-
		F	120-180 °C	-	-
Calcareous water		-	< 90 °C	HQQE	-
Calcium acetate (as coolant with inhibitor)	$Ca(CH_3COO)_2$	D, E	30 %, 50 °C	HQQE	-
Calcium hydroxide	$Ca\ (OH)_2$	E	Saturated solution, 50 °C	HQQE	-
Chloride-containing water		F	< 30 °C, max. 500 ppm	-	HQQE
Chromic acid	H_2CrO_4	H	1 %, 20 °C	-	HQQV
Citric acid	$HOC(CH_2CO_2H)_2COOH$	H	5 %, 40 °C	-	HQQE
Completely desalinated water (demineralised water)		-	120 °C	-	HQQE
Condensate		-	120 °C	HQQE	-
Copper sulphate	$CuSO_4$	E	10 %, 50 °C	-	HQQE
Corn oil		D, E, 3	100 %, 80 °C	HQQV	-
Diesel oil		2, 3, 4, F	100 %, 20 °C	HQBV	-
Domestic hot water (potable water)		-	< 120 °C	HQQE	-
Ethanol (ethyl alcohol)	C_2H_5OH	1, F	100 %, 20 °C	HQQE	-
Ethylene glycol	$HOCH_2CH_2OH$	D, E	50 %, 50 °C	HQQE	-
Formic acid	$HCOOH$	-	5 %, 20 °C	-	HQQE
Glycerine (glycerol)	$OHCH_2CH(OH)CH_2OH$	D, E	50 %, 50 °C	HQQE	-
Hydraulic oil (mineral)		E, 2, 3	100 %, 100 °C	HQQV	-
Hydraulic oil (synthetic)		E, 2, 3	100 %, 100 °C	HQQV	-
Isopropyl alcohol	$CH_3CHOHCH_3$	1, F	100 %, 20 °C	HQQE	-
Lactic acid	$CH_3CH(OH)COOH$	E, H	10 %, 20 °C	-	HQQV
Linoleic acid	$C_{17}H_{31}COOH$	E, 3	100 %, 20 °C	HQQV	-
Methanol (methyl alcohol)	CH_3OH	1, F	100 %, 20 °C	HQQE	-
Motor oil		E, 2, 3	100 %, 80 °C	HQQV	-
Naphthalene	$C_{10}H_8$	E, H	100 %, 80 °C	HQQV	-
Nitric acid	HNO_3	F	1 %, 20 °C	-	HQQE
Oil-containing water		-	< 100 °C	HQQV	-
Olive oil		D, E, 3	100 %, 80 °C	HQQV	-
Oxalic acid	$(COOH)_2$	H	1 %, 20 °C	-	HQQE
Ozone-containing water	(O_3)	-	< 100 °C	-	HQQE
Peanut oil		D, E, 3	100 %, 80 °C	HQQV	-
Petrol		1, 3, 4, F	100 %, 20 °C	HQBV	-
Phosphoric acid	H_3PO_4	E	20 %, 20 °C	-	HQQE
Propanol	C_3H_7OH	1, F	100 %, 20 °C	HQQE	-
Propylene glycol	$CH_3CH(OH)CH_2OH$	D, E	50 %, 90 °C	HQQE	-
Potassium carbonate	K_2CO_3	E	20 %, 50 °C	HQQE	-
Potassium formate (as coolant with inhibitor)	$KOOCH$	D, E	30 %, 50 °C	HQQE	-
Potassium hydroxide	KOH	E	20 %, 50 °C	-	HQQE
Potassium permanganate	$KMnO_4$	-	5 %, 20 °C	-	HQQE
Rape seed oil		D, E, 3	100 %, 80 °C	HQQV	-
Salicylic acid	$C_6H_4(OH)COOH$	H	0.1 %, 20 °C	-	HQQE

Pumped liquid	Chemical formula	Note	Liquid concentration, liquid temperature	CRE, CRIE	CRNE
Silicone oil		E, 3	100 %	HQQV	-
Sodium bicarbonate	$NaHCO_3$	E	10 %, 60 °C	-	HQQE
Sodium chloride (as coolant)	NaCl	D, E	30 %, < 5 °C, pH > 8	HQQE	-
Sodium hydroxide	NaOH	E	20 %, +0 °C	-	HQQE
Sodium hypochlorite	NaOCl	F	0.1 %, 20 °C	-	HQQV
Sodium nitrate	$NaNO_3$	E	10 %, 60 °C	-	HQQE
Sodium phosphate	Na_3PO_4	E, H	10 %, 60 °C	-	HQQE
Sodium sulphate	Na_2SO_4	E, H	10 %, 60 °C	-	HQQE
Softened water		-	< 120 °C	-	HQQE
Soya oil		D, E, 3	100 %, 80 °C	HQQV	-
Sulphuric acid	H_2SO_4	F	1 %, 20 °C	-	HQQV
Sulphurous acid	H_2SO_3	-	1 %, 20 °C	-	HQQE
Unsalted swimming-pool water		-	Approx. 2 ppm free chlorine (Cl_2)	HQQE	-

10. Accessories

Pipe connection

Various sets of counter-flanges and couplings are available for pipe connection.

Adapter kit

DN 150 flanges are available for CRE, CRNE 120 and 150 pumps. To use DN 150 flanges, you must order two adapter kits per pump.

Adapter kit	Pump type	Pipe connection	Adapter kits required	Product number
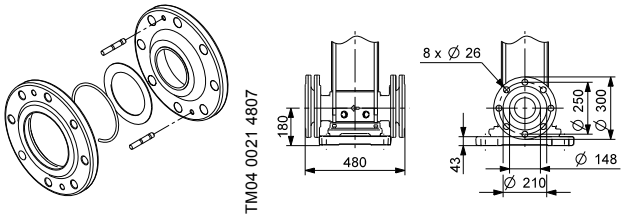	**CRE 120** **CRE 150**	150 mm, nominal	2	96638169
	CRNE 120 **CRNE 150**	150 mm, nominal	2	96638180

We offer an optional 6" pump base for the CRN 90, 120 and 150 pump ranges with DN 150 connections according to DIN, ANSI and JIS standards. This base eliminates the need for an adapter kit.
For more information, see CR "Custom-built pumps" data booklet on www.grundfos.com (WebCAPS).

Counter-flanges for CRE

A set consists of one counter-flange, one gasket, bolts and nuts.

Counter-flange	Pump type	Description	Rated pressure	Pipe connection	Product number
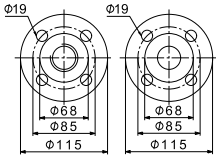	**CRE 1** **CRE 3** **CRE 5**	Threaded	16 bar, EN 1092-2	Rp 1	409901
		For welding	25 bar, EN 1092-2	25 mm, nominal	409902
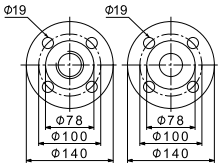	**CRE 1** **CRE 3** **CRE 5**	Threaded	16 bar, EN 1092-2	Rp 1 1/4	419901
		For welding	25 bar, EN 1092-2	32 mm, nominal	419902
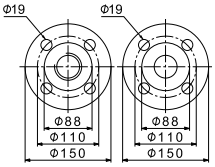	**CRE 10**	Threaded	16 bar, EN 1092-2	Rp 1 1/2	429902
		Threaded	16 bar, EN 1092-2	Rp 2	429904
		For welding	25 bar, EN 1092-2	40 mm, nominal	429901
		For welding	40 bar, special flange	50 mm, nominal	429903

Counter-flange		Pump type	Description	Rated pressure	Pipe connection	Product number
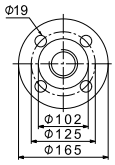	TM05 0999 2011	CRE 15 CRE 20	Threaded	16 bar, EN 1092-2	Rp 2	339903
			Threaded	16 bar, special flange	Rp 2 1/2	339904
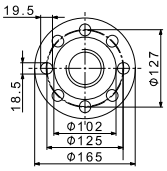	TM05 1005 2011		Threaded	16 bar, special flange	Rp 2 1/2*	96509578
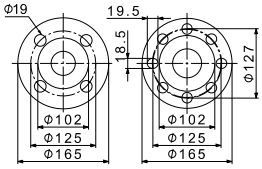	TM05 1000 2011		For welding	25 bar, EN 1092-2	50 mm, nominal	339901
			For welding	40 bar, special flange	65 mm, nominal	339902
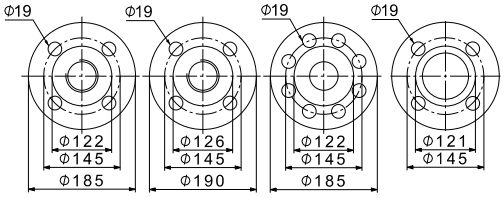	TM05 0997 2011	CRE 32	Threaded	16 bar, EN 1092-2	Rp 2 1/2	349902
			Threaded	16 bar, special flange	Rp 3	349901
			For welding	16 bar, EN 1092-2	65 mm, nominal	349904
			For welding	40 bar, DIN 2635	65 mm, nominal	349905
			For welding	16 bar, special flange	80 mm, nominal	349903
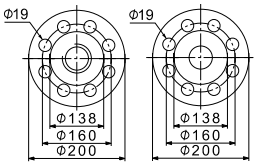	TM05 0996 2011	CRE 45	Threaded	16 bar	Rp 3	350540
			For welding	16 bar	80 mm, nominal	350541
			For welding	40 bar	80 mm, nominal	350542
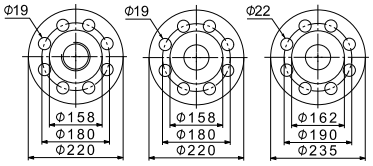	TM05 0995 2011	CRE 64 CRE 90	Threaded	16 bar, EN 1092-2	Rp 4	369901
			For welding	16 bar, EN 1092-2	100 mm, nominal	369902
			For welding	25 bar, EN 1092-2	100 mm, nominal	369905
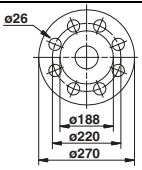	TM03 8892 2707	CRE 120 CRE 150	For welding	40 bar, EN 1092-2	125 mm, nominal	96750475
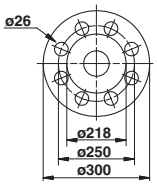	TM03 8891 2707		For welding	40 bar, EN 1092-2	150 mm, nominal	96750476

* Flange with 20 mm higher collar. With this collar, the installation dimensions of a CRE 20 will be identical to those of a CRE 32.
If a CRE 32 is replaced by a CRE 20, the base must be raised by 15 mm.

Counter-flanges for CRNE

Counter-flanges for CRNE pumps are made of stainless steel EN 1.4401 (AISI 316).
A set consists of one counter-flange, one gasket, bolts and nuts.

Counter-flange		Pump type	Description	Rated pressure	Pipe connection	Product number
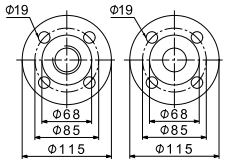	TM05 0998 2011	**CRIE 1, 3, 5 CRNE 1, 3, 5**	Threaded	16 bar, EN 1092-2	Rp 1	405284
			For welding	25 bar, EN 1092-2	25 mm, nominal	405285
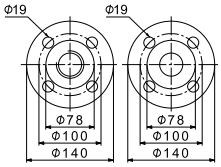	TM05 1003 2011	**CRIE 1, 3, 5 CRNE 1, 3, 5**	Threaded	16 bar, EN 1092-2	Rp 1 1/4	415304
			For welding	25 bar, EN 1092-2	32 mm, nominal	415305
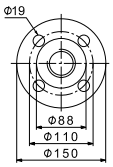	TM05 1001 2011	**CRIE 10 CRNE 10**	Threaded	16 bar, EN 1092-2	Rp 1 1/2	425245
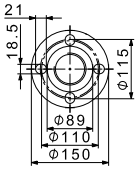	TM05 1006 2011		Threaded	16 bar, EN 1092-2	Rp 2	96509570
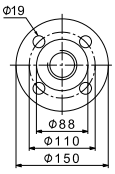	TM05 1001 2011		For welding	25 bar, EN 1092-2	40 mm, nominal	425246
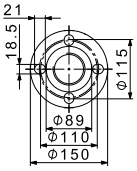	TM05 1006 2011		For welding	25 bar, special flange	50 mm, nominal	96509571

Counter-flange		Pump type	Description	Rated pressure	Pipe connection	Product number
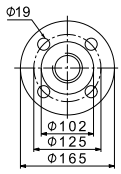	TM05 0999 2011	CRIE 15, 20 CRNE 15, 20	Threaded	16 bar, EN 1092-2	Rp 2	335254
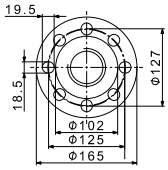	TM05 1005 2011		Threaded	16 bar, special flange	Rp 2 1/2	96509575
			Threaded	16 bar, special flange	Rp 2 1/2*	96509579
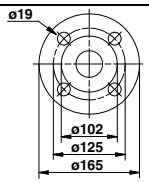	TM03 0402 2011		For welding	25 bar, EN 1092-2	50 mm, nominal	335255
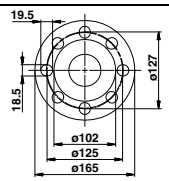	TM00 7203 2803		For welding	25 bar, special flange	65 mm, nominal	96509573
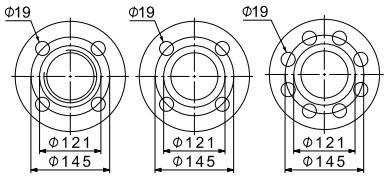	TM05 0994 2011	CRNE 32	Threaded	16 bar	Rp 2 1/2	349910
			Threaded	16 bar, special flange	Rp 3	349911
			For welding	16 bar	65 mm, nominal	349906
			For welding	40 bar	65 mm, nominal	349908
			For welding	16 bar, special flange	80 mm, nominal	349907
			For welding	25 bar, special flange	80 mm, nominal	349909
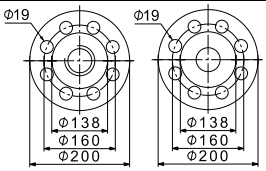	TM05 0996 2011	CRNE 45	Threaded	16 bar	Rp 3	350543
			For welding	16 bar	80 mm, nominal	350544
			For welding	40 bar	80 mm, nominal	350545
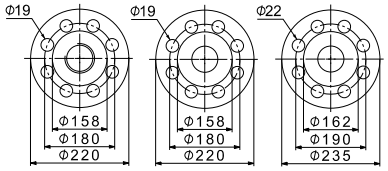	TM05 0995 2011	CRNE 64 CRNE 90	Threaded	16 bar	Rp 4	369904
			For welding	16 bar	100 mm, nominal	369903
			For welding	40 bar	100 mm, nominal	369906
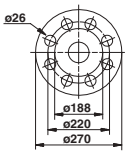	TM03 8892 2707	CRNE 120 CRNE 150	For welding	40 bar, EN 1092-2	125 mm, nominal	96750477
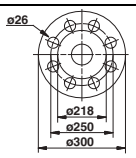	TM03 8891 2707		For welding	40 bar, EN 1092-2	150 mm, nominal	96750478

* Flange with 20 mm higher collar. With this collar, the installation dimensions of a CRE 20 will be identical to those of a CRE 32.
If a CRE 32 is replaced by a CRE 20, the base must be raised by 15 mm.

PJE couplings for CRNE

Materials in contact with the pumped liquid are made of stainless steel EN 1.4401 (AISI 316) and rubber.

A coupling set consists of two coupling halves (Victaulic type 77), one gasket, one pipe stub (for welding or threaded), bolts and nuts.

Coupling	Pump type	Pipe stub	Max. pressure [bar]	A	B	Pipe connection	Rubber parts	Coupling sets required	Product number
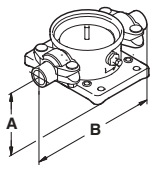	**CRN 1s, 1, 3, 5**	Threaded	69	50	320	R 1 1/4	EPDM	2	419911
							FKM	2	419905
		For welding	69	50	280	DN 32	EPDM	2	419912
							FKM	2	419904
	CRN 10, 15, 20	Threaded	69	80	377	R 2	EPDM	2	339911
							FKM	2	339918
		For welding	69	80	371	DN 50	EPDM	2	339910
							FKM	2	339917
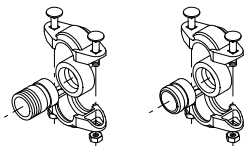	**CRN 32**	For welding	69	105	420	DN 80	EPDM	2	98144746
							FKM	2	98144749
	CRN 45, 64	For welding	69	140	465	DN 100	EPDM	2	98144752
							FKM	2	98144755
	CRN 90	For welding	69	140	480	DN 100	EPDM	2	98144752
							FKM	2	98144755
	CRN 120, 150	For welding	69	180	480	DN 100	EPDM	2	98144752
							FKM	2	98144755

TM03 8890 2707 - TM00 3808 1094

FlexiClamp base connections

All sets comprise the necessary number of bolts and nuts as well as a gasket/O-ring.

Base connection	Pump type	Connection	Pipe connection	PN	A	B	Rubber parts	Coupling sets required	Product number
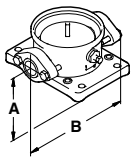 TM02 7368 3303	**CRIE 1, 3, 5 CRNE 1, 3, 5**	Oval (cast iron)	Rp 1	16	50	210	Klingersil	1	96449748
			Rp 1 1/4					1	96449749
		Oval (stainless steel)	Rp 1					2	96449746
			Rp 1 1/4					2	96449747
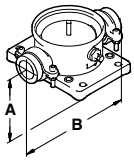 TM02 7369 3303	**CRIE 1, 3, 5 CRNE 1, 3, 5**	Union	G 2	25	50	228	EPDM	2	96449743
							FKM	2	96449744
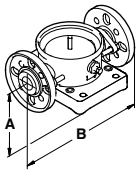 TM02 7370 3303	**CRIE 1, 3, 5 CRNE 1, 3, 5**	DIN (stainless steel)	DN 25 DN 32	16	75	250	EPDM	2	96449745
							FKM	2	96449900

Base connection	Pump type	Connection	Pipe connection	PN	A	B	Rubber parts	Coupling sets required	Product number
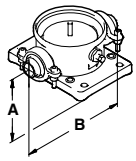 TM02 7371 3303	**CRIE 1, 3, 5** **CRNE 1, 3, 5**	Clamp, threaded pipe stub	Rp 1	25	50	208	EPDM	2	405280
							FKM	2	405281
			Rp 1 1/4				EPDM	2	415296
							FKM	2	415297
			1" NPT				EPDM	2	405291
							FKM	2	405292
			1 1/4" NPT				EPDM	2	415311
							FKM	2	415312
		Clamp, pipe stub for welding	28.5			-	EPDM	2	405282
							FKM	2	405283
			37.2			-	EPDM	2	415300
							FKM	2	415301

Base connection	Pump type	Connection	Pipe connection	PN	A	B	Rubber parts	Coupling sets required	Product number
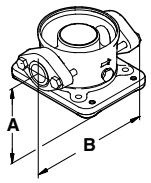 TM02 7372 3303	**CRIE 10** **CRNE 10**	Oval (cast iron)	Rp 1 1/4	16	80	260	Klingersil	2	96498775
			Rp 1 1/2					2	96498727
			Rp 2					2	96498836
		Oval (stainless steel)	Rp 1 1/4					2	96498776
			Rp 1 1/2					2	96498728
			Rp 2					2	96498835
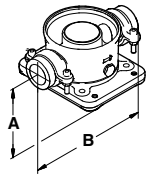 TM02 7374 3303	**CRIE 10** **CRNE 10**	Union	G 2 3/4	25	80	288	EPDM	2	96500275
							FKM	2	96500276
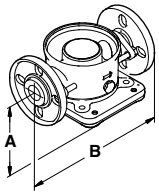 TM02 7373 3303	**CRIE 10** **CRNE 10**	FGJ (cast iron)	DN 40	16	80	316	EPDM	2	96498840
							FKM	2	96500119
		FGJ (stainless steel)					EPDM	2	96500263
							FKM	2	96500264
		FGJ (cast iron)	DN 50				EPDM	2	96500265
							FKM	2	96500266
		FGJ (stainless steel)					EPDM	2	96500267
							FKM	2	96500269

Base connection	Pump type	Connection	Pipe connection	PN	A	B	Rubber parts	Coupling sets required	Product number
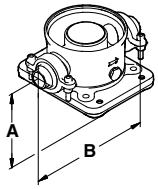 TM02 7375 3303	**CRIE 10** **CRNE 10**	Clamp, threaded pipe stub	Rp 1 1/2	25	80	259	EPDM	2	425238
							FKM	2	425239
			Rp 2				EPDM	2	335241
							FKM	2	335242
			Rp 2 1/2			346	EPDM	2	96508600
							FKM	2	96508601
		Clamp, pipe stub for welding	48.3 (DN 40)			-	EPDM	2	425242
							FKM	2	425243
			60.3 (DN 50)			-	EPDM	2	335251
							FKM	2	335252

Base connection	Pump type	Connection	Pipe connection	PN	A	B	Rubber parts	Number of coupling sets required	Product number
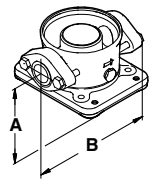 TM02 7372 3303	**CRIE 15, 20 CRNE 15, 20**	Oval (cast iron)	Rp 1 1/4	10	90	260	Klingersil	2	96498775
			Rp 1 1/2					2	96498727
			Rp 2					2	96498836
		Oval (stainless steel)	Rp 1 1/4					2	96498776
			Rp 1 1/2					2	96498728
			Rp 2					2	96498835
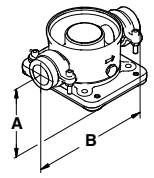 TM02 7374 3303	**CRIE 15, 20 CRNE 15, 20**	Union	G 2 3/4	25	90	288	EPDM	2	96500275
							FKM	2	96500276
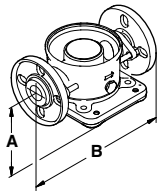 TM02 7373 3303	**CRIE 15, 20 CRNE 15, 20**	FGJ (cast iron)	DN 40	10	90	334	EPDM	2	96498840
							FKM	2	96500119
		FGJ (stainless steel)					EPDM	2	96500263
							FKM	2	96500264
		FGJ (cast iron)	DN 50				EPDM	2	96500265
							FKM	2	96500266
		FGJ (stainless steel)					EPDM	2	96500267
							FKM	2	96500269
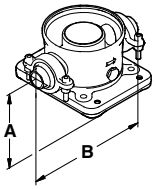 TM02 7375 3303	**CRIE 15, 20 CRNE 15, 20**	Clamp, threaded pipe stub	Rp 1 1/2	25	90	259	EPDM	2	425238
							FKM	2	425239
			Rp 2				EPDM	2	335241
							FKM	2	335242
			Rp 2 1/2			346	EPDM	2	96508600
							FKM	2	96508601
		Clamp, pipe stub for welding	48.3 (DN 40)			-	EPDM	2	425242
							FKM	2	425243
			60.3 (DN 50)			-	EPDM	2	335251
							FKM	2	335252

Potentiometer

The potentiometer is suitable for setpoint setting and start/stop of the CRE, CRIE, CRNE pump.

Product	Product number
External potentiometer with cabinet for wall mounting	625468

EMC filter

The EMC filter is required when 11 to 22 kW E-pumps are installed in residential areas.

Product	Product number
EMC filter (11 kW)	96478309
EMC filter (15 kW)	
EMC filter (18.5 kW)	
EMC filter (22 kW)	

LiqTec

The LiqTec dry-running protection unit protects the pump and process against dry running and temperatures exceeding 130 ± 5 °C. Connected to the motor PTC sensor, the LiqTec also monitors the motor temperature.

The LiqTec is prepared for DIN rail mounting in control cabinet.

Enclosure class: IPX0.

LiqTec unit	Pump type	Voltage [V]	LiqTec	Sensor 1/2"	Cable 5 m	Extension cable 15 m	Product number
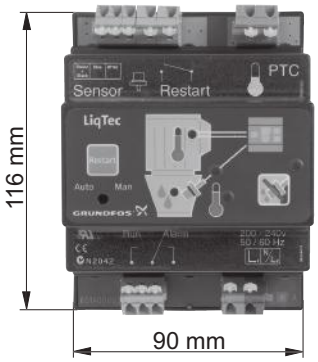 TM03 2108 3705	CRE CRIE CRNE	200-240	•	•	•	-	96556429
		80-130	•	•	•	-	96556430
		-	-	-	-	•	96443676
		-	-	•	•	-	96556427

Sensors

Grundfos Vortex Flow sensor, VFI[1]	Type	Flow range [m³/h]	Pipe connection	O-ring		Connection type		Product number
				EPDM	FKM	Cast-iron flange	Stainless-steel flange	
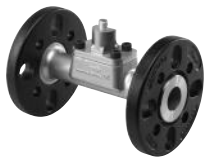	VFI 1.3-25 DN32 020 E	1.3 - 25	DN 32	•		•		97686141
	VFI 1.3-25 DN32 020 F				•	•		97686142
	VFI 1.3-25 DN32 020 E			•			•	97688297
	VFI 1.3-25 DN32 020 F				•		•	97688298
	VFI 2-40 DN40 020 E	2 - 40	DN 40	•		•		97686143
	VFI 2-40 DN40 020 F				•	•		97686144
	VFI 2-40 DN40 020 E			•			•	97688299
	VFI 2-40 DN40 020 F				•		•	97688300
	VFI 3.2-64 DN50 020 E	2 - 64	DN 50	•		•		97686145
	VFI 3.2-64 DN50 020 F				•	•		97686146
• Sensor tube with sensor, sensor tube of 1.4408 and sensor of 1.4404 • 4-20 mA output signal • 2 flanges • 5 m cable with M12 connection in one end • quick guide.	VFI 3.2-64 DN50 020 E			•			•	97688301
	VFI 3.2-64 DN50 020 F				•		•	97688302
	VFI 5.2-104 DN65 020 E	5.2 - 104	DN 65	•		•		97686147
	VFI 5.2-104 DN65 020 F				•	•		97686148
	VFI 5.2-104 DN65 020 E			•			•	97688303
	VFI 5.2-104 DN65 020 F				•		•	97688304
	VFI 8-160 DN80 020 E	8 - 160	DN 80	•		•		97686149
	VFI 8-160 DN80 020 F				•	•		97686150
	VFI 8-160 DN80 020 E			•			•	97688305
	VFI 8-160 DN80 020 F				•		•	97688306
	VFI 12-240 DN100 020 E	12 - 240	DN 100	•		•		97686151
	VFI 12-240 DN100 020 F				•	•		97686152
	VFI 12-240 DN100 020 E			•			•	97688308
	VFI 12-240 DN100 020 F				•		•	97688309

[1] For more information about the VFI sensor, see the Grundfos Direct Sensors™ data booklet, publication number 97790189, on www.grundfos.com (WebCAPS).

Accessory	Type	Supplier	Measuring range	Product number
Flowmeter	SITRANS F M MAGFLO MAG 5100 W	Siemens	1-5 m³ (DN 25)	ID8285
	SITRANS F M MAGFLO MAG 5100 W		3-10 m³ (DN 40)	ID8286
	SITRANS F M MAGFLO MAG 5100 W		6-30 m³ (DN 65)	ID8287
	SITRANS F M MAGFLO MAG 5100 W		20-75 m³ (DN 100)	ID8288
Temperature sensor	TTA (0) 25	Carlo Gavazzi	0 to +25 °C	96432591
	TTA (-25) 25		-25 to +25 °C	96430194
	TTA (50) 100		+50 to +100 °C	96432592
	TTA (0) 150		0 to +150 °C	96430195
Accessory for temperature sensor. All with 1/2 RG connection	Protecting tube ∅9 x 50 mm			96430201
	Protecting tube ∅9 x 100 mm			96430202
	Cutting ring bush			96430203
Temperature sensor, ambient temperature	WR 52	tmg (DK: Plesner)	-50 - +50 °C	ID8295
Differential-temperature sensor	ETSD	Honsberg	0-20 °C	96409362
			0-50 °C	96409363

Note: All sensors have 4-20 mA signal output.

Danfoss pressure sensor kits

Content	Liquid temperature	Pressure [bar]	Product number
• Danfoss pressure sensor, type MBS 3000, with 2 m screened cable Connection: G 1/2 A (DIN 16288 - B6kt) • 5 cable clips (black) • Instructions PT (400212)	-40 to +85 °C	0-4	96428014
		0-6	96428015
		0-10	96428016
		0-16	96428017
		0-25	96428018

DPI differential-pressure sensor kit

Content	Pressure [bar]	Product number
• 1 sensor incl. 0.9 m screened cable (7/16" connections) • 1 original DPI bracket for wall mounting • 1 Grundfos bracket for mounting on motor • 2 M4 screws for mounting of sensor on bracket • 1 M6 screw (self-cutting) for mounting on MGE 90/100 • 1 M8 screw (self-cutting) for mounting on MGE 112/132 • 3 capillary tubes (short/long) • 2 fittings (1/4" - 7/16") • 5 cable clips (black) • Installation and operating instructions (00480675) • Service kit instructions.	0 - 0.6	96611522
	0 - 1.0	96611523
	0 - 1.6	96611524
	0 - 2.5	96611525
	0 - 4.0	96611526
	0 - 6.0	96611527
	0-10	96611550

Control MPC

TM05 3232 1012

The Grundfos Control MPC is a complete control cabinet with a built-in CU 352 multipump control unit, main switch, contactors, IO 351 modules, cabling, etc. The Control MPC is designed for the control and monitoring of up to six identical pumps connected in parallel. The Control MPC is supplied with all necessary components and contains application-optimised software.

For further information, please see the Control MPC Data Booklet on WebCaps > www.grundfos.com/webcaps

Remote controls

R100 remote control

The R100 is used for wireless communication with the CRE, CRIE or CRNE pump. The R100 communicates with the pump via infrared light.

Product	Product number
R100	96615297

Grundfos GO Remote

The Grundfos GO Remote is used for wireless infrared or radio communication with the pumps.

Various Grundfos GO Remote variants are available. The variants are described in the following.

MI 202 and MI 204

The MI 202 and MI 204 are add-on modules with built-in infrared and radio communication. The MI 202 can be used in conjunction with an Apple iPhone or iPod with 30-pin connector and iOS 5.0 or later, e.g. fourth generation iPhone or iPod.

The MI 204 can be used in conjunction with an Apple iPhone or iPod with Lightning connector, e.g. fifth generation iPhone or iPod.

(The MI 204 is also available together with an Apple iPod touch and a cover.)

TM05 3887 1612 - TM05 7704 1513

Fig. 33 MI 202 and MI 204

Supplied with the product:

- Grundfos MI 202 or 204
- sleeve
- quick guide
- charger cable.

MI 301

The MI 301 is a module with built-in infrared and radio communication. The MI 301 can be used in conjunction with Android or iOS-based smart devices with a Bluetooth connection. The MI 301 has rechargeable Li-ion battery and must be charged separately.

TM05 3890 1712

Fig. 34 MI 301

Supplied with the product:

- Grundfos MI 301
- sleeve
- battery charger
- quick guide.

Product numbers

Grundfos GO Remote variant	Product number
Grundfos MI 202	98046376
Grundfos MI 204	98424092
Grundfos MI 204 including iPod touch	98612711
Grundfos MI 301	98046408

CIU communication interface units

GrA 6118

Fig. 35 Grundfos CIU communication interface unit

The CIU units enable communication of operating data, such as measured values and setpoints, between CRE, CRIE, CRNE pumps and a building management system. The CIU unit incorporates a 24-240 VAC/VDC power supply module and a CIM module. It can either be mounted on a DIN rail or on a wall.

We offer the following CIU units:

CIU 100

For communication via LonWorks.

CIU 150

For communication via PROFIBUS DP.

CIU 200

For communication via Modbus RTU.

CIU 250

For wireless communication via GSM/GPRS.

CIU 271

For communication via Grundfos Remote Management (GRM).

CIU 300

For communication via BACnet MS/TP.

Description	Fieldbus protocol	Product number
CIU 100	LonWorks	96753735
CIU 150	PROFIBUS DP	96753081
CIU 200	Modbus RTU	96753082
CIU 250*	GSM/GPRS	96787106
CIU 271*	GRM	96898819
CIU 300	BACnet MS/TP	Contact Grundfos

* Antenna not included. See below.

Antennas for CIU 250 and 270

Description	Product number
Antenna for roof	97631956
Antenna for desk	97631957

For further information about data communication via CIU units and fieldbus protocols, see the CIU documentation available on www.grundfos.com (WebCAPS).

CIM communication interface modules

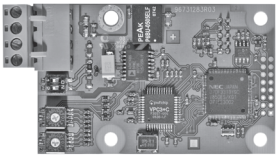

GrA 6121

Fig. 36 Grundfos CIM communication interface module

The CIM modules enable communication of operating data, such as measured values and setpoints, between CRE, CRIE or CRNE pumps of 11-22 kW and a building management system. The CIM modules are add-on communication modules which are fitted in the terminal box of CRE, CRIE, CRNE pumps of 11-22 kW.

Note: CIM modules must be fitted by authorised personnel.

We offer the following CIM modules:

CIM 100

For communication via LonWorks.

CIM 150

For communication via PROFIBUS DP.

CIM 200

For communication via Modbus RTU.

CIM 250

For wireless communication via GSM/GPRS.

CIM 271

For communication via Grundfos Remote Management (GRM).

CIM 300

For communication via BACnet MS/TP.

Description	Fieldbus protocol	Product number
CIM 100	LonWorks	96824797
CIM 150	PROFIBUS DP	96824793
CIM 200	Modbus RTU	96824796
CIM 250*	GSM/GPRS	96824795
CIM 271*	GRM	96898815
CIM 300	BACnet MS/TP	Contact Grundfos

* Antenna not included. See below.

Antennas for CIM 250 and 270

Description	Product number
Antenna for roof	97631956
Antenna for desk	97631957

For further information about data communication via CIM modules and fieldbus protocols, see the CIM documentation available on www.grundfos.com (WebCAPS).

11. Variants

The variants are available on request.

Although the Grundfos CRE, CRIE, CRNE product range offers a number of pumps for different applications, customers require specific pump solutions to satisfy their needs. See the following documents:

- Grundfos CR "Custom-built pumps" data booklet
- Grundfos "CRN high pressure" data booklet.

Below please find the range of options available for customising the CRE pumps to meet the customers' demands.

Contact Grundfos for further information or for requests other than the ones mentioned below.

Motors

Variant	Description
ATEX-approved motor	For operation in hazardous atmospheres, explosion-proof or dust-ignition-proof motors may be required.
Motor with anti-condensation heating unit	For operation in humid environments, motors with built-in anti-condensation heating unit may be required.
Motor with thermal protection	We offer motors with built-in bimetallic thermal switches or temperature-controlled PTC sensors (thermistors) incorporated in the motor windings.
Oversize motor	Ambient temperatures above 40 °C or installation at altitudes of more than 1000 metres above sea level require the use of an oversize motor, i.e. derating.
4-pole motor	We offer 4-pole standard motors.

Shaft seals

Variant	Description
Shaft seal with FFKM O-ring	We recommend shaft seals with FFKM or FXM O-ring for applications where the pumped liquid may damage the standard O-ring material.
Seal with flush, quench seal	We recommend seals with flush/quench seals for applications involving crystallising, hardening or sticky liquids.
Air-cooled shaft seal system	We recommend air-cooled shaft seal systems for applications involving extremely high temperatures. No conventional mechanical shaft seal can withstand liquid temperatures of up to 180 °C for any length of time. In order to ensure a low liquid temperature around the standard shaft seal, the pump is fitted with a special air-cooled shaft seal chamber. No separate cooling is required.
Double seal with pressure chamber	We recommend double seals with pressure chamber for applications involving poisonous or explosive liquids. It protects the surrounding environment and the people working in the vicinity of the pump. It consists of two seals mounted in a "back-to-back" arrangement inside a separate pressure seal chamber. As the pressure in the chamber is higher than the pump pressure, leakage is prevented. A dosing pump or a special pressure intensifier generates the seal chamber pressure.
CR MAGdrive	Magnetically driven pumps for industrial applications. Key applications are industrial processes involving the handling of aggressive, environmental, dangerous or volatile liquids, for example organic compounds and solvents.

Pumps

Variant	Description
Horizontally mounted pump	For safety or height reasons, certain applications, for instance on ships, require the pump to be mounted in the horizontal position. For easy installation, the pump is fitted with brackets that support motor and pump.
Low-temperature pump	Exposed to temperatures down to -40 °C, coolant pumps may require neck rings with a different diameter in order to prevent impeller drag.
High-speed pump up to 47 bar	For high-pressure applications, we offer a unique pump capable of generating a pressure of up to 47 bar. The pump is fitted with a high-speed motor, type MGE. The direction of rotation is the opposite of that of standard pumps, and the chamber stack is turned upside-down, as a result of which the pumped liquid flows in the opposite direction.
High-pressure pump up to 47 bar	For high-pressure applications, we offer a unique double pump system capable of generating a pressure of up to 47 bar.
Low-NPSH pump (improved suction)	We recommend the Low-NPSH pump for boiler-feed applications where cavitation may occur due to poor inlet conditions.
Pump with bearing flange	The bearing flange is suitable for applications where the inlet pressure is higher than the maximum pressure recommended. The bearing flange increases the life of motor bearings. We recommend this pump for standard motors.
Belt-driven pump	Belt-driven pumps designed to operate in places with limited space or where no electrical power is available.
Pump for pharmaceutical and biotechnological applications	CRNE pumps designed for applications requiring the sterilisation and CIP capability of pipes, valves and pumps. (CIP = Cleaning-In-Place.)

Connections and other variants

Variant	Description
Pipe connections	In addition to the wide range of standard flange connections, a 16 bar DIN standard clamping flange is available. Customised flanges are available according to specifications.
TriClamp connection	TriClamp connections are of a hygienic design with a sanitary coupling for use in the pharmaceutical and food industry.
Electropolished pump	To substantially reduce the risk of corrosion of the materials. For use in the pharmaceutical and food industry.

12. Further product information

WebCAPS

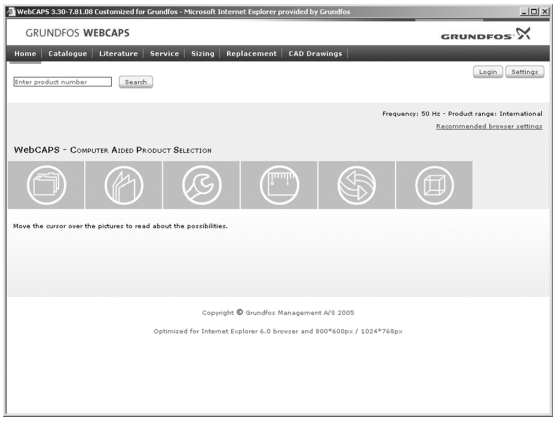

WebCAPS is a **Web**-based **C**omputer **A**ided **P**roduct **S**election program available on www.grundfos.com.

WebCAPS contains detailed information on more than 220,000 Grundfos products in more than 30 languages.

Information in WebCAPS is divided into six sections:

- Catalogue
- Literature
- Service
- Sizing
- Replacement
- CAD drawings.

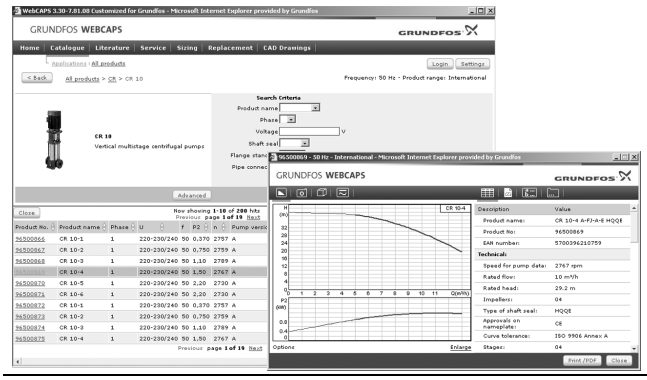

Catalogue

Based on fields of application and pump types, this section contains the following:

- technical data
- curves (QH, Eta, P1, P2, etc.) which can be adapted to the density and viscosity of the pumped liquid and show the number of pumps in operation
- product photos
- dimensional drawings
- wiring diagrams
- quotation texts, etc.

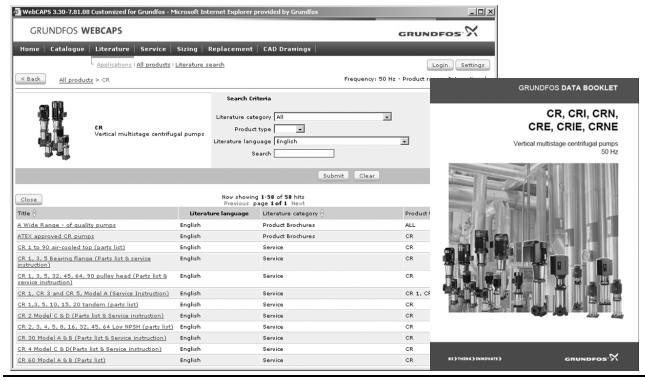

Literature

This section contains all the latest documents of a given pump, such as

- data booklets
- installation and operating instructions
- service documentation, such as Service kit catalogue and Service kit instructions
- quick guides
- product brochures.

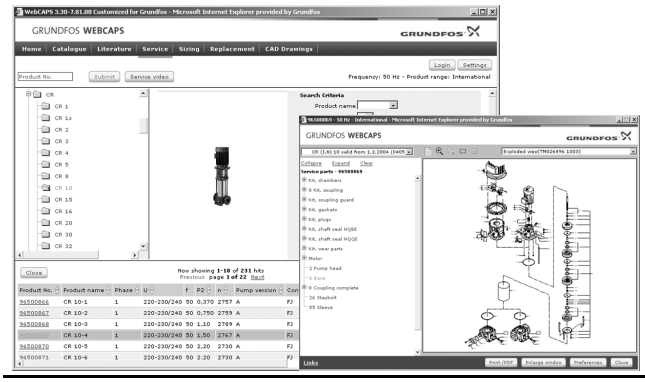

Service

This section contains an easy-to-use interactive service catalogue. Here you can find and identify service parts of both existing and discontinued Grundfos pumps.
Furthermore, the section contains service videos showing you how to replace service parts.

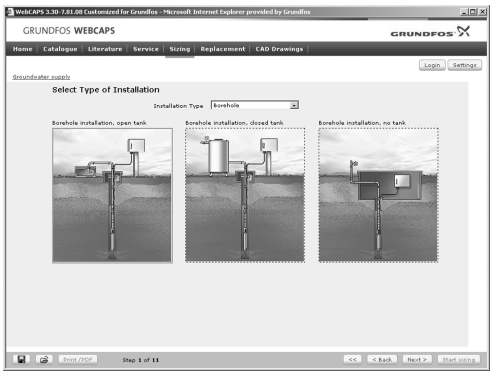

Sizing

This section is based on different fields of application and installation examples and gives easy step-by-step instructions in how to size a product:

- Select the most suitable and efficient pump for your installation.
- Carry out advanced calculations based on energy, consumption, payback periods, load profiles, life cycle costs, etc.
- Analyse your selected pump via the built-in life cycle cost tool.
- Determine the flow velocity in wastewater applications, etc.

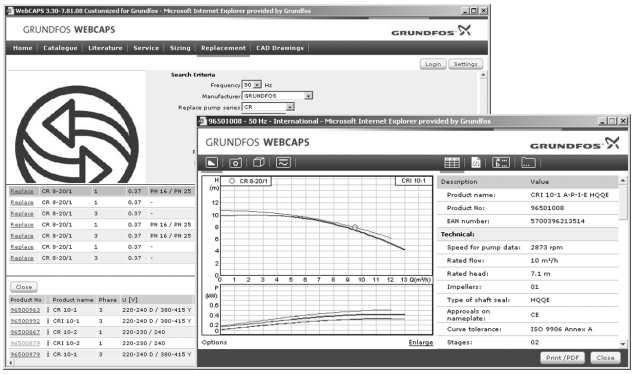

Replacement

In this section you find a guide to selecting and comparing replacement data of an installed pump in order to replace the pump with a more efficient Grundfos pump.
The section contains replacement data of a wide range of pumps produced by other manufacturers than Grundfos.

Based on an easy step-by-step guide, you can compare Grundfos pumps with the one you have installed on your site. When you have specified the installed pump, the guide will suggest a number of Grundfos pumps which can improve both comfort and efficiency.

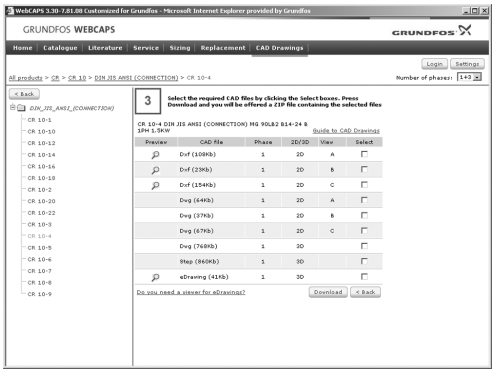

CAD drawings

In this section, it is possible to download 2-dimensional (2D) and 3-dimensional (3D) CAD drawings of most Grundfos pumps.

These formats are available in WebCAPS:

2-dimensional drawings:
- .dxf, wireframe drawings
- .dwg, wireframe drawings.

3-dimensional drawings:
- .dwg, wireframe drawings (without surfaces)
- .stp, solid drawings (with surfaces)
- .eprt, E-drawings.

WinCAPS

Fig. 37 WinCAPS DVD

WinCAPS is a **Win**dows-based **C**omputer **A**ided **P**roduct **S**election program containing detailed information on more than 220,000 Grundfos products in more than 30 languages.

The program contains the same features and functions as WebCAPS, but is an ideal solution if no internet connection is available.

WinCAPS is available on DVD and updated once a year.

GO CAPS

Mobile solution for professionals on the GO!

CAPS functionality on the mobile workplace.

Available on the App Store

Subject to alterations.

be think innovate

98423696 0314

ECM: 1131854

GRUNDFOS A/S
DK-8850 Bjerringbro . Denmark
Telephone: +45 87 50 14 00
www.grundfos.com

GRUNDFOS