SE1, SEV

1.1 to 11 kW

50 Hz

be
think
innovate

GRUNDFOS

Table of contents

1. Introduction 4
Introduction . . . 4
Applications . . . 4
Smartdesign . . . 5

2. Performance range 6
Performance overview . . . 6
Performance range . . . 6

3. Identification 8
Type key . . . 8
Nameplate . . . 8

4. Selection of product 9
Ordering the product . . . 9

5. Product range 10
Standard pumps . . . 10
Explosion-proof pumps . . . 14

6. Variants 16
List of variants . . . 16

7. Construction 18
SE1 . . . 18
SEV . . . 22
Material specification . . . 26

8. Product description 27
Features . . . 27
Operating conditions . . . 29
Motor range . . . 29
Approvals . . . 30
Controllers . . . 31
Wiring diagrams . . . 34

9. Curve charts 36
How to read the performance curves . . . 36
Curve conditions . . . 37
Performance tests . . . 37
Certificates . . . 37
Witness test . . . 37

10. Performance curves and technical data 38
SE1.50.65.22.(Ex).2 . . . 38
SE1.50.65.30.(Ex).2 . . . 39
SE1.50.65.40.(Ex).2 . . . 40
SE1.50.80.22.(Ex).2 . . . 41
SE1.50.80.30.(Ex).2 . . . 42
SE1.50.80.40.(Ex).2 . . . 43
SE1.80.80.15.(Ex).4 . . . 44
SE1.80.80.22.(Ex).4 . . . 45
SE1.80.80.30.(Ex).4 . . . 46
SE1.80.80.40.(Ex).4 . . . 47
SE1.80.80.55.(Ex).4 . . . 48
SE1.80.80.75.(Ex).4 . . . 49
SE1.80.100.15.(Ex).4 . . . 50
SE1.80.100.22.(Ex).4 . . . 51
SE1.80.100.30.(Ex).4 . . . 52
SE1.80.100.40.(Ex).4 . . . 53
SE1.80.100.55.(Ex).4 . . . 54
SE1.80.100.75.(Ex).4 . . . 55
SE1.100.100.40.(Ex).4 . . . 56
SE1.100.100.55.(Ex).4 . . . 57
SE1.100.100.75.(Ex).4 . . . 58

SE1.100.150.40.(Ex).4 . . . 59
SE1.100.150.55.(Ex).4 . . . 60
SE1.100.150.75.(Ex).4 . . . 61
SEV.65.65.22.(Ex).2 . . . 62
SEV.65.65.30.(Ex).2 . . . 63
SEV.65.65.40.(Ex).2 . . . 64
SEV.65.80.22.(Ex).2 . . . 65
SEV.65.80.30.(Ex).2 . . . 66
SEV.65.80.40.(Ex).2 . . . 67
SEV.80.80.11.(Ex).4 . . . 68
SEV.80.80.13.(Ex).4 . . . 69
SEV.80.80.15.(Ex).4 . . . 70
SEV.80.80.22.(Ex).4 . . . 71
SEV.80.80.40.(Ex).4 . . . 72
SEV.80.80.40.(Ex).2 . . . 73
SEV.80.80.60.(Ex).2 . . . 74
SEV.80.80.75.(Ex).2 . . . 75
SEV.80.80.92.(Ex).2 . . . 76
SEV.80.80.110.(Ex).2 . . . 77
SEV.80.100.11.(Ex).4 . . . 78
SEV.80.100.13.(Ex).4 . . . 79
SEV.80.100.15.(Ex).4 . . . 80
SEV.80.100.22.(Ex).4 . . . 81
SEV.80.100.40.(Ex).4 . . . 82
SEV.80.100.40.(Ex).2 . . . 83
SEV.80.100.60.(Ex).2 . . . 84
SEV.80.100.75.(Ex).2 . . . 85
SEV.80.100.92.(Ex).2 . . . 86
SEV.80.100.110.(Ex).2 . . . 87
SEV.100.100.30.(Ex).4 . . . 88
SEV.100.100.40.(Ex).4 . . . 89
SEV.100.100.55.(Ex).4 . . . 90
SEV.100.100.75.(Ex).4 . . . 91

11. Accessories **92**
Installation systems . . . 92

12. Dimensions and weights **94**
Dimensions . . . 94
Weights . . . 106

13. Grundfos Product Center **107**

1. Introduction

Introduction

This data booklet deals with Grundfos submersible wastewater and sewage pumps, types SE1 and SEV.

Two types of pumps are available:

- SE1 pumps with S-tube® impeller
- SEV pumps with SuperVortex (free-flow) impeller.

Fig. 1 SE1 (S-**tube**®) and SEV (SuperVortex) pumps

The S-**tube**® impeller is the only impeller available in the wastewater market that does not compromise either efficiency or free passage through the pump.

The pumps are SuperVortex or S-tube® impeller pumps specifically designed for pumping sewage and wastewater in a wide range of municipal, private and industrial applications.

The pumps are made of wear-resistant materials, such as cast iron and stainless steel. These materials ensure long and reliable operation.

The pumps are fitted with IEC IE3 premium efficiency motors from 1.1 kW up to and including 11 kW. The motors are either 2- or 4-pole motors, depending on the motor size.

The free passage (spherical) in the pumps is 50 to 100 mm, depending on the pump type. All pump housings have a cast iron, PN 10 outlet flange, size DN 65 to DN 150, according to EN 1092-2.

The pumps are available for these types of installation:

- dry installation, vertical or horizontal
- submerged installation on auto-coupling system
- submerged installation, free-standing on ring stand.

Applications

Typical applications are transfer of liquids such as:

- wastewater with a high content of fibres
- drainage and surface water
- domestic wastewater
- municipal wastewater
- industrial wastewater
- process and cooling water.

The pumps are ideal for pumping the above liquids from places such as:

- municipal network pumping stations
- inlet pumping stations in wastewater treatment plants
- primary clarification pits in wastewater treatment plants
- secondary clarification pits in wastewater treatment plants
- stormwater pumping stations
- public buildings
- residential buildings
- factories and industry.

Smartdesign

smartdesign describes the functional design of our products that combines elegant appearance with smart features, created with customer needs in mind. **smart**design does not only look good; the design also makes installation, operation and maintenance of the product easier and more user-friendly.

The **smart**design features of Grundfos SE1 and SEV pumps include the following:

- cooling jacket for internal cooling of the motor which makes the pumps suitable for dry and submerged installation without the need for external cooling
- moisture-proof cable plug connection made of corrosion-resistant stainless steel with conductors embedded in polyethane sealant
- stainless steel clamp connection between motor housing and pump housing for easy service
- double mechanical cartridge shaft seal for easy service and perfect seal face alignment
- power cable incorporating wires for thermal sensors in the motor windings
- no additional cable required for sensors in pumps with sensors
- monitoring of operating conditions for pumps with sensors
- moisture detector for continuous monitoring of motor enclosure and automatic cut-out in case of leakage
- heavy-duty bearings greased for life
- built for frequency converter operation
- smooth pump surface preventing dirt and impurities from sticking to the pump
- self-cleaning S-tube® impeller with a long vane reducing the risk of jamming or clogging, or SuperVortex impeller with high pumping efficiency and less downtime
- explosion-proof motors for potentially explosive environments
- motor insulation class F (155 °C)
- enclosure class IP68 with one thermal sensor in each phase.

2. Performance range

Performance overview

Figure 2 shows the performance overview of SE pumps. Figures 3 and 4 shows the performance range of SE sewage and wastewater pumps. It gives an overview of the various sizes and impeller types.

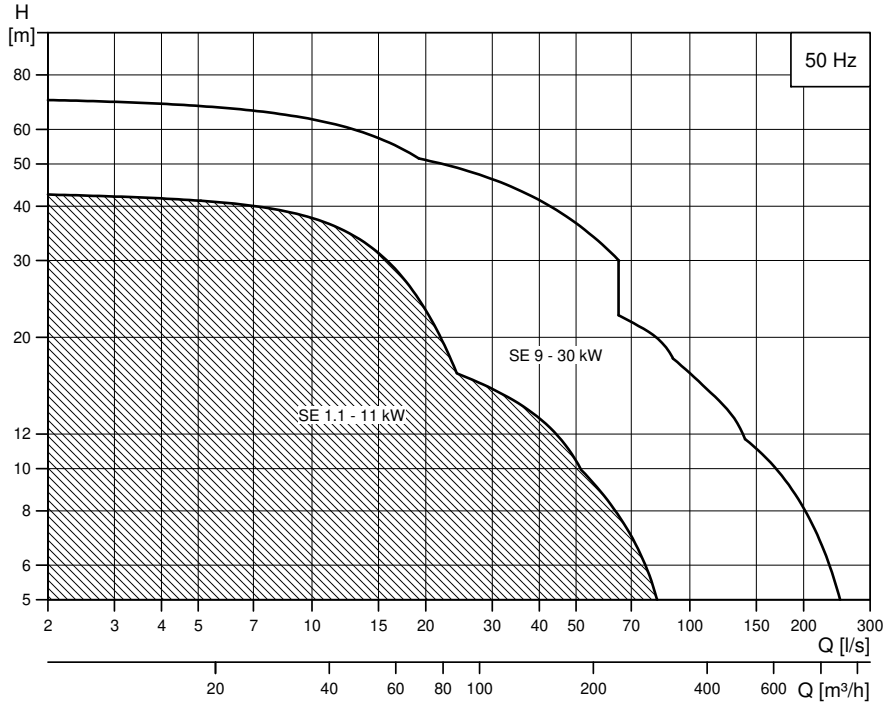

TM05 4165 2112

Fig. 2 Performance overview

Performance range

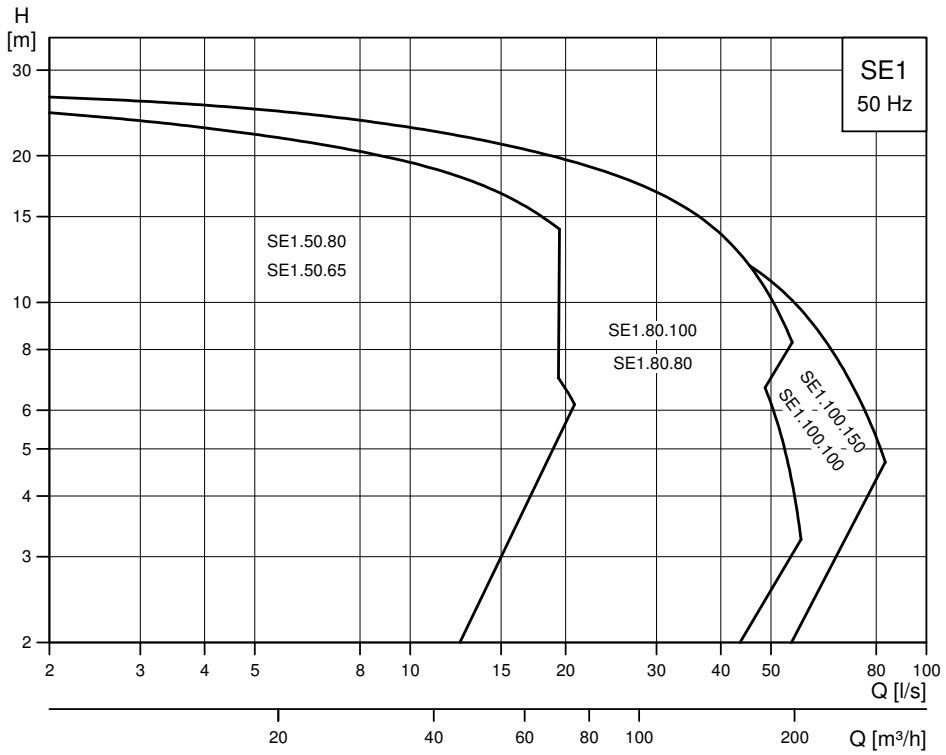

TM06 9188 2017

Fig. 3 Performance range of SE1 pumps

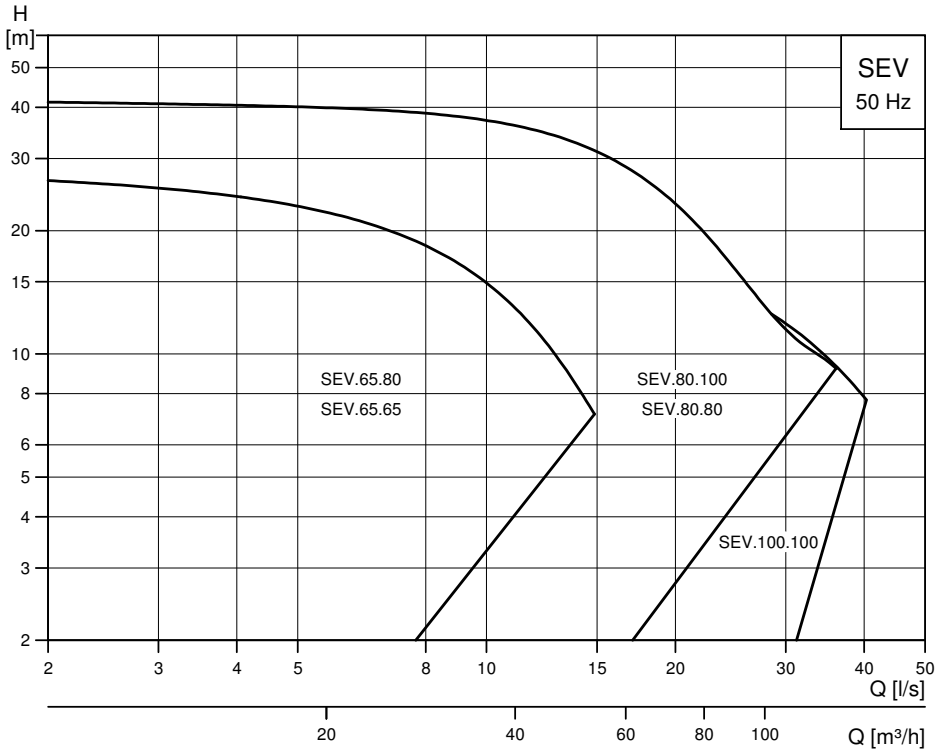

TM06 9189 2017

Fig. 4 Performance range of SEV pumps

Note: For information about the performance range of each individual pump, see pages 38 to 91. If your required duty point exceeds the grey performance range below, please see the Grundfos SL(1/V), SE(1/V) and S range data booklets available in Grundfos Product Center.

Performance curves and technical data

SE1	Page
SE1.50.65.22.(Ex).2	38
SE1.50.65.30.(Ex).2	39
SE1.50.65.40.(Ex).2	40
SE1.50.80.22.(Ex).2	41
SE1.50.80.30.(Ex).2	42
SE1.50.80.40.(Ex).2	43
SE1.80.80.15.(Ex).4	44
SE1.80.80.22.(Ex).4	45
SE1.80.80.30.(Ex).4	46
SE1.80.80.40.(Ex).4	47
SE1.80.80.55.(Ex).4	48
SE1.80.80.75.(Ex).4	49
SE1.80.100.15.(Ex).4	50
SE1.80.100.22.(Ex).4	51
SE1.80.100.30.(Ex).4	52
SE1.80.100.40.(Ex).4	53
SE1.80.100.55.(Ex).4	60
SE1.80.100.75.(Ex).4	61
SE1.100.100.40.(Ex).4	56
SE1.100.100.55.(Ex).4	57
SE1.100.100.75.(Ex).4	58
SE1.100.150.40.(Ex).4	59
SE1.100.150.55.(Ex).4	60
SE1.100.150.75.(Ex).4	61

SEV	Page
SEV.65.65.22.(Ex).2	62
SEV.65.65.30.(Ex).2	63
SEV.65.65.40.(Ex).2	64
SEV.65.80.22.(Ex).2	65
SEV.65.80.30.(Ex).2	66
SEV.65.80.40.(Ex).2	67
SEV.80.80.11.(Ex).4	68
SEV.80.80.13.(Ex).4	69
SEV.80.80.15.(Ex).4	70
SEV.80.80.22.(Ex).4	71
SEV.80.80.40.(Ex).4	72
SEV.80.80.40.(Ex).2	73
SEV.80.80.60.(Ex).2	74
SEV.80.80.75.(Ex).2	75
SEV.80.80.92.(Ex).2	76
SEV.80.80.110.(Ex).2	77
SEV.80.100.11.(Ex).4	78
SEV.80.100.13.(Ex).4	79
SEV.80.100.15.(Ex).4	80
SEV.80.100.22.(Ex).4	81
SEV.80.100.40.(Ex).4	82
SEV.80.100.40.(Ex).2	83
SEV.80.100.60.(Ex).2	84
SEV.80.100.75.(Ex).2	85

SEV	Page
SEV.80.100.92.(Ex).2	86
SEV.80.100.110.(Ex).2	87
SEV.100.100.30.(Ex).4	88
SEV.100.100.40.(Ex).4	89
SEV.100.100.55.(Ex).4	90
SEV.100.100.75.(Ex).4	91

3. Identification

Type key

The pump can be identified by means of the type designation stated on the nameplate on the top cover of the pump.

Example: SE1.80.80.40.A.Ex.4.51D.B

Code	Explanation	Designation
SE	Grundfos sewage and wastewater pumps	Pump type
1	S-tube® impeller	Impeller type
V	SuperVortex impeller	
80	Maximum solids size [mm]	Pump passage
80	Nominal diameter of pump outlet port [mm]	Pump outlet
40	Output power P2/10	Power [kW]
[ ]	Standard, without sensor	Sensor versions
A	Sensor version	
[ ]	Non-explosion proof pump, standard	Pump version
Ex	Explosion-proof pump	
2	2-pole	Number of poles
4	4-pole	
50	50 Hz	Frequency [Hz]
0B	400-415 V, DOL	Voltage and starting method
0D	380-415 V, DOL	
1D	380-415 V, Y/D	
0E	220-240 V, DOL	
1E	220-240 V, Y/D	
[ ]	First generation	Generation*
A	Second generation	
B	Third generation	
C	Fourth generation	
[ ]	Cast-iron impeller, pump housing and top cover	Pump materials
Q	Stainless steel impeller, cast-iron pump housing and top cover	
R	Entire pump of stainless steel	
S	Stainless steel pump housing, impeller and intermediate flange and cast-iron top cover, on request	
D	Stainless steel	
Z	Custom-built products	Customisation

* The generation code distinguishes between pumps of different design, but with the same power rating.

Nameplate

The nameplate is located on the top cover of the pump.

The extra nameplate supplied with the pump must be fixed at the installation site.

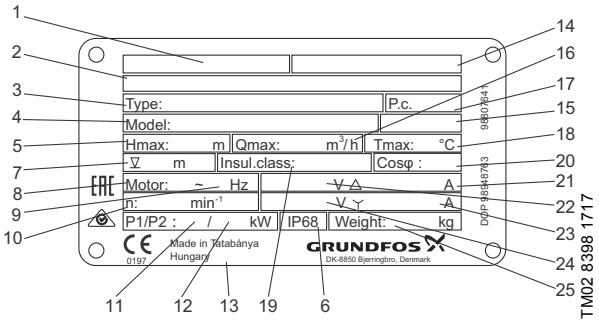

Fig. 5 Nameplate

Pos.	Description
1	Notified body and explosion protection classification
2	Explosion protection mark
3	Type designation
4	Product number and serial number
5	Maximum head [m]
6	Enclosure class to IEC 60529
7	Maximum installation depth [m]
8	Number of phases
9	Frequency [Hz]
10	Speed [min^{-1}]
11	Motor input power P1 [kW]
12	Motor output power P2 [kW]
13	Country of production
14	Explosion protection certificate number
15	Standard for wastewater lifting stations for buildings and installation sites
16	Maximum flow rate [m^3/h]
17	Production code (year/week)
18	Maximum liquid temperature [°C]
19	Insulation class
20	Power factor
21	Rated current 1
22	Rated voltage 1
23	Rated current 2
24	Rated voltage 2
25	Weight without cable [kg]

4. Selection of product

Ordering the product

When ordering a pump, take these aspects into consideration:

- pump type
- custom-built variation (optional)
- explosion-proof version
- accessories
- pump controller.

Pump type

Use the table below to identify the pump type that best fulfils your needs. The table is for guidance only.

Description	SE1	SEV
Liquid and operating characteristics		
Dry solids content up to 3 %	•	•
Dry solids content up to 5 %		•
Relatively low content of fibres and solids	•	•
Relatively high content of fibres and solids		•
Relatively low number of operating hours	•	•
Relatively high number of operating hours	•	
Applications		
Stormwater	•	•
Groundwater	•	•
Drainage and surface water	•	•
Drainage and surface water with small impurities	•	•
Abrasive surface water	•	•
Wastewater with long fibres e.g. from laundries	•	•
Domestic wastewater with discharge from toilets	•	•
Municipal sewage	•	•
Sewage from commercial buildings	•	•
Industrial process water with fibres/solids		•
Industrial process water with solids	•	•
Industrial process water without solids and fibres	•	

When you have selected the pump type, use the sections *Product range* on page 10 and *Type key* on page 8 to identify the pump that best fulfils your needs.

The list below is a detailed description of the product you get if you order this pump:

Pump	Product No
SE1.80.80.40.A.Ex.4.51D.B	96177682

- pump as specified in the type key
- 10 m cable
- paint: NCS 9000N black (RAL 9005), gloss code 30, thickness 100 µm
- thermal switch in motor windings
- tested according to ISO 9906:2012 grade 3B.

See section *Performance curves and technical data* for selection of a standard pump.

Note: Product-specific data for the pump can also be seen in Grundfos Product Center, using the product number 96177682.

Custom-built variants

The pumps can be customised to meet individual requirements. Many pump features and options are available for customisation, such as explosion-proof versions, various cable lengths and special materials.

Variants can be seen in *List of variants* on page 16.

For requirements or designs not included in the list, please contact Grundfos.

Explosion-proof version

The entire range is available in explosion-proof versions.

For further information about explosion-proof pumps, see page 30.

Accessories

Depending on installation type and pump variant, you may need to order accessories. See *Accessories* on page 92 for selection of the correct accessories.

Note: Ordered accessories are not factory-fitted.

Controller

The following controllers are available:

- Dedicated Controls, DC control cabinets. See also page 31.
- LC/LCD 107 with air bells
- LC/LCD 108 with float switches
- LC/LCD 110 with electrodes.
- Grundfos Dedicated Controls.

TM06 0918 1314

Grundfos Dedicated Controls is a control system designed for installation in either commercial buildings or network pumping stations with one to six pumps.

As standard, the system is supplied with application-optimised software and can be configured to meet your specific pumping needs.

For further information about Grundfos Dedicated Controls, see page 31.

5. Product range

Standard pumps

SE1 pumps

Cast-iron impeller, pump housing and top cover

Pump type	Sensor		Number of poles	Voltage [V]				
				3 x 400-415 DOL	3 x 380-415 DOL	3 x 220-240 DOL	3 x 380-415 Y/D	3 x 220-240 Y/D
	Yes	No		[0B]	[0D]	[0E]	[1D]	[1E]
SE1.50.65.22		•	2	96048364	96047509	96047513		
	•		2	96177735	96177629	96338698		
SE1.50.65.30		•	2	96048368	96047517	96047521		
	•		2	96177736	96177630	96338699		
SE1.50.65.40		•	2	96048372			96047525	96047529
	•		2	96177737			96177631	96338700
SE1.50.80.22		•	2	96047399	96047981	96047985		
	•		2	96177738	96177632	96338701		
SE1.50.80.30		•	2	96047395	96047989	96047993		
	•		2	96177739	96177633	96338702		
SE1.50.80.40		•	2	96047391			96047997	96048001
	•		2	96177740			96177634	96338703
SE1.80.80.15		•	4	96048376	96047533	96047541		
	•		4	96177741	96177635	96338704		
SE1.80.80.22		•	4	96048384	96047549	96047557		
	•		4		96177636	96338705		
SE1.80.80.30		•	4	96048392	96047565	96047581		
	•		4	96177743	96177637	96338706		
SE1.80.80.40		•	4	96048408			96047597	96047605
	•		4	96177744			96177638	96338707
SE1.80.80.55		•	4	96048416			96047613	96047621
	•		4	96177745			96177639	96338708
SE1.80.80.75		•	4	96048424			96047627	96047635
	•		4	96177746			96177640	96338709
SE1.80.100.15		•	4	96047387	96048005	96048013		
	•		4	96177747	96177641	96338710		
SE1.80.100.22		•	4	96047379	96048021	96048029		
	•		4	96177748	96177642	96338711		
SE1.80.100.30		•	4	96047371	96048037	96048061		
	•		4	96177749	96177643	96338712		
SE1.80.100.40		•	4	96047355			96048069	96048077
	•		4	96177750			96177644	96338713
SE1.80.100.55		•	4	96047347			96048085	96048093
	•		4	96177751			96177645	96338714
SE1.80.100.75		•	4	96047339			96048099	96048107
	•		4	96177752			96177646	96338715
SE1.100.100.40		•	4	96048432			96047641	96047649
	•		4	96177753			96177647	96338716
SE1.100.100.55		•	4	96048440			96047657	96047665
	•		4	96177754			96177648	96338717
SE1.100.100.75		•	4	96048448			96047671	96047679
	•		4	96177755			96177649	96338718
SE1.100.150.40		•	4	96047331			96048113	96048121
	•		4	96177756			96177650	96338719
SE1.100.150.55		•	4	96047323			96048129	96048137
	•		4	96177757			96177651	96782341
SE1.100.150.75		•	4	96047315			96048143	96048151
	•		4	96177758			96177652	96338721

SEV

Pump with cast-iron impeller, pump housing and top cover

Pump type	Sensor		Number of poles	Voltage [V]				
				3 x 400-415 DOL	3 x 380-415 DOL	3 x 220-240 DOL	3 x 380-415 Y/D	3 x 220-240 Y/D
	Yes	No		[0B]	[0D]	[0E]	[1D]	[1E]
SEV.65.65.22		•	2	96048462	96047697	96047705		
	•		2	96177759	96177653	96338746		
SEV.65.65.30		•	2	96048470	96047713	96047721		
	•		2	96177760	96177654	96338747		
SEV.65.65.40		•	2	96048478			96047729	96047737
	•		2				96177655	96338748
		•	2	96177761			96177655	96338748
SEV.65.80.22		•	2	96047301	96048169	96048177		
	•		2	96177762	96177656	96338749		
SEV.65.80.30		•	2	96047293	96048185	96048193		
	•		2	96177763	96177657	96338750		
SEV.65.80.40		•	2	96047285			96048201	96048209
	•		2	96177764			96177658	96338751
SEV.80.80.11		•	4	96048486	96047745	96047751		
	•		4	96177765	96177659	96338752		
SEV.80.80.13		•	4	96048492	96047757	96047763		
	•		4	96177766	96177660	96338753		
SEV.80.80.15		•	4	96048498	96047769	96047775		
	•		4	96177767	96177661	96338754		
SEV.80.80.22		•	4	96047497	96047781	96047789		
	•		4	96177768	96177662	96338755		
SEV.80.80.40		•	2	96047473			96047829	96047837
		•	4	96047489			96047797	96047813
	•		2	96177770			96177664	96338757
	•		4	96177769			96177663	96338756
SEV.80.80.60		•	2	96047465			96047845	96047853
	•		2	96177771			96177665	96338758
SEV.80.80.75		•	2	96047457			96047861	96047869
	•		2	96177772			96177666	96338759
SEV.80.80.92		•	2	96047201			96047207	96047195
	•		2	96177773			96177667	96338760
SEV.80.80.110		•	2	96047449			96047877	96047885
	•		2	96177774			96177668	96338761
SEV.80.100.11		•	4	96780761	96780674	96780675		
	•		4	96780774	96780694	96780695		
SEV.80.100.13		•	4	96780762	96780676	96780677		
	•		4	96780775	96780696	96780697		
SEV.80.100.15		•	4	96780763	96780678	96780679		
	•		4	96780776	96780698	96780699		
SEV.80.100.22		•	4	96780760	96780680	96780681		
	•		4	96780777	96780700	96780701		
SEV.80.100.40		•	2	96780758			96780684	96780685
		•	4	96780759			96780682	96780683
	•		2	96780779			96780704	96780705
	•		4	96780778			96780702	96780703
SEV.80.100.60		•	2	96780757			96780686	96780687
	•		2	96780780			96780706	96780707
SEV.80.100.75		•	2	96780756			96780688	96780689
	•		2	96780781			96780708	96780709
SEV.80.100.92		•	2	96780754			96780690	96780691
	•		2	96780782			96780710	96780711
SEV.80.100.110		•	2	96780755			96780692	96780693
	•		2	96780783			96780712	96780713
SEV.100.100.30		•	4	96047443	96047893	96047909		
	•		4	96177775	96177669	96338762		
SEV.100.100.40		•	4	96047427			96047925	96047933
	•		4	96177776			96177670	96338763
SEV.100.100.55		•	4	96047419			96047941	96047949
	•		4	96177777			96177671	96338764
SEV.100.100.75		•	4	96047411			96047957	96047965
	•		4	96177778			96177672	96338765

Note: The range is also available with trimmed impeller to meet a specific duty point. Contact Grundfos for more information.

Entire pump of stainless steel

Pump type	Sensor		Number of poles	3 x 400-415 DOL	Voltage [V]			
					3 x 380-415 DOL	3 x 220-240 DOL	3 x 380-415 Y/D	3 x 220-240 Y/D
	Yes	No		[0B]	[0D]	[0E]	[1D]	[1E]
SEV.65.65.22*		•	2	96962858	98489849	98489861		
	•		2	96966549	98489871	98489873		
SEV.65.65.30*		•	2	96962859	98489850	98489862		
	•		2	96966550	98489872	98489874		
SEV.65.65.40*		•	2	96962860			98489863	98489864
	•		2	96966551			98489875	98489876
SEV.65.80.22*		•	2	96962867	98489865	98489867		
	•		2	96966642	98489877	98489879		
SEV.65.80.30*		•	2	96962868	98489866	98489868		
	•		2	96966643	98489878	98489880		
SEV.65.80.40*		•	2	96962869			98489869	98489870
	•		2	96966644			98489881	98489882
SEV.80.80.11		•	4	96962883	96889323	97679507		
	•		4	96966646	96962192	97683044		
SEV.80.80.13		•	4	96962885	96889324	97679508		
	•		4	96966648	96962193	97683045		
SEV.80.80.15		•	4	96962886	96889325	97679509		
	•		4	96966649	96962194	97683046		
SEV.80.80.22		•	4	96962887	96889326	97679510		
	•		4	96966650	96962195	97683047		
SEV.80.80.40		•	2	96962888			96889328	97679512
		•	4	96962889			96889327	97679511
	•		2	96966651			96962197	97683049
	•		4	96966652			96962196	97683048
SEV.80.80.60		•	2	96962890			96889329	97679513
	•		2	96966653			96962198	97683050
SEV.80.80.75		•	2	96980890			96889330	97679514
	•		2	96966654			96962199	97683051
SEV.80.80.92		•	2	96962891			96889331	97679515
	•		2	96966655			96962200	97683052
SEV.80.80.110		•	2	96962892			96889332	97679516
	•		2	96966656			96962201	97683053
SEV.80.100.11		•	4	96962934	96889333	97679517		
	•		4	96966658	96970539	97683054		
SEV.80.100.13		•	4	96962935	96889334	97679518		
	•		4	96966660	96970540	97683055		
SEV.80.100.15		•	4	96962936	96889335	97679519		
	•		4	96966661	96970541	97683056		
SEV.80.100.22		•	4	96980821	96889336	97679520		
	•		4	96966662	96970582	97683057		
SEV.80.100.40		•	2	96962937			96889338	97679522
		•	4	96962938			96889337	97679521
	•		2	96966663			96970584	97683059
	•		4	96966664			96970583	97683058
SEV.80.100.60		•	2	96962939			96889339	97679523
	•		2	96966665			96970585	97683060
SEV.80.100.75		•	2	96962940			96889340	97679524
	•		2	96966666			96970586	97683061
SEV.80.100.92		•	2	96962941			96889341	97679525
	•		2	96966667			96970587	97683062
SEV.80.100.110		•	2	96962942			96889342	97679526
	•		2	96966659			96970588	97683063
SEV.100.100.30		•	4	96965899	96889343	97679527		
	•		4	96966668	96962223	97683064		
SEV.100.100.40		•	4	96965900			96889344	97679528
	•		4	96966669			96962224	97683065
SEV.100.100.55		•	4	96965901			96889345	97679529
	•		4	96966670			96962225	97683066
SEV.100.100.75		•	4	96965932			96889346	97679530
	•		4	96966671			96962226	97683067

Note: The range is also available with trimmed impeller to meet a specific duty point. Contact Grundfos for more information.

Stainless steel impeller, cast-iron pump housing and top cover

Pump type	Sensor		Number of poles	Voltage [V]				
				3 x 400-415 DOL	3 x 380-415 DOL	3 x 220-240 DOL	3 x 380-415 Y/D	3 x 220-240 Y/D
	Yes	No		[0B]	[0D]	[0E]	[1D]	[1E]
SEV.65.65.22		•	2	98451161	98450865	98450867		
	•		2	98451178	98450897	98450899		
SEV.65.65.30		•	2	98451162	98450866	98450868		
	•		2	98451179	98450898	98450900		
SEV.65.65.40		•	2	98451163			98450869	98450870
	•		2	98451180			98450931	98450932
SEV.65.80.22		•	2	98451164	98450871	98450873		
	•		2	98451181	98450933	98450935		
SEV.65.80.30		•	2	98451165	98450872	98450874		
	•		2	98451182	98450934	98450936		
SEV.65.80.40		•	2	98451166			98450875	98450876
	•		2	98451183			98450937	98450938
SEV.80.80.11		•	4	97638245	97637756	97679037		
	•		4	97638154	97638036	97679100		
SEV.80.80.13		•	4	97638246	97637757	97679038		
	•		4	97638155	97638037	97679101		
SEV.80.80.15		•	4	97638247	97637758	97679039		
	•		4	97638156	97638038	97679102		
SEV.80.80.22		•	4	97638248	97637759	97679040		
	•		4	97638157	97638039	97679103		
SEV.80.80.40		•	2	97638250			97637761	97679042
		•	4	97638249			97637760	97679041
	•		2	97638159			97638051	97679105
	•		4	97638158			97638040	97679104
SEV.80.80.60		•	2	97638251			97637762	97679043
	•		2	97638160			97638052	97679106
SEV.80.80.75		•	2	97638252			97637763	97679044
	•		2	97638161			97638053	97679107
SEV.80.80.92		•	2	97638253			97637764	97679045
	•		2	97638162			97638054	97679108
SEV.80.80.110		•	2	97638254			97637765	97679046
	•		2	97638163			97638055	97679109
SEV.80.100.11		•	4	97638255	97637766	97679047		
	•		4	97638164	97638056	97679110		
SEV.80.100.13		•	4	97638256	97637767	97679048		
	•		4	97638165	97638057	97679111		
SEV.80.100.15		•	4	97638257	97637768	97679049		
	•		4	97638166	97638058	97679112		
SEV.80.100.22		•	4	97638258	97637769	97679050		
	•		4	97638167	97638059	97679113		
SEV.80.100.40		•	2	97638260			97637771	97679052
		•	4	97638259			97637770	97679051
	•		2	97638169			97638061	97679115
	•		4	97638168			97638060	97679114
SEV.80.100.60		•	2	97638261			97637772	97679053
	•		2	97638170			97638062	97679116
SEV.80.100.75		•	2	97638262			97637773	97679054
	•		2	97638171			97638063	97679117
SEV.80.100.92		•	2	97638263			97637774	97679055
	•		2	97638172			97638064	97679118
SEV.80.100.110		•	2	97638264			97637775	97679056
	•		2	97638173			97638065	97679119
SEV.100.100.30		•	4	97638265	97637776	97679057		
	•		4	97638174	97638066	97679120		
SEV.100.100.40		•	4	97638266			97637777	97679058
	•		4	97638175			97638067	97679121
SEV.100.100.55		•	4	97638267			97637778	97679059
	•		4	97638176			97638068	97679122
SEV.100.100.75		•	4	97638268			97637779	97679060
	•		4	97638177			97638069	97679123

Note: The above range is also available with trimmed impeller to meet a specific duty point. Contact Grundfos for more information.

Explosion-proof pumps

SE1

Cast-iron impeller, pump housing and top cover

Pump type	Sensor		Number of poles	Voltage [V]				
				3 x 400-415 DOL	3 x 380-415 DOL	3 x 220-240 DOL	3 x 380-415 Y/D	3 x 220-240 Y/D
	Yes	No		[0B]	[0D]	[0E]	[1D]	[1E]
SE1.50.65.22		•	2	96102066	96047511	96047515		
	•		2		96177673	96338722		
SE1.50.65.30		•	2	96102068	96047519	96047523		
	•		2		96177674	96338723		
SE1.50.65.40		•	2	96102071			96047527	96047531
	•		2				96177675	96338724
SE1.50.80.22		•	2	96102073	96047983	96047987		
	•		2		96177676	96338725		
SE1.50.80.30		•	2	96102075	96047991	96047995		
	•		2		96177677	96338726		
SE1.50.80.40		•	2	96102078			96047999	96048003
	•		2				96177678	96338727
SE1.80.80.15		•	4	96102080	96047537	96047545		
	•		4		96177679	96338728		
SE1.80.80.22		•	4	96102081	96047553	96047561		
	•		4		96177680	96338729		
SE1.80.80.30		•	4	96102082	96047569	96047593		
	•		4		96177681	96338730		
SE1.80.80.40		•	4	96102084			96047601	96047609
	•		4				96177682	96338731
SE1.80.80.55		•	4	96102087			96047617	96047624
	•		4				96177683	96338732
SE1.80.80.75		•	4	96102090			96047631	96047638
	•		4				96177684	96338733
SE1.80.100.15		•	4	96102092	96048009	96048017		
	•		4		96177685	96338734		
SE1.80.100.22		•	4	96102093	96048025	96048033		
	•		4		96177686	96338735		
SE1.80.100.30		•	4	96102094	96048041	96048057		
	•		4		96177687	96338736		
SE1.80.100.40		•	4	96102096			96048073	96048081
	•		4				96177688	96338737
SE1.80.100.55		•	4	96102099			96048089	96048096
	•		4				96177689	96338738
SE1.80.100.75		•	4	96102102			96048103	96048110
	•		4				96177690	96338739
SE1.100.100.40		•	4	96102105			96047645	96047653
	•		4				96177691	96338740
SE1.100.100.55		•	4	96102108			96047661	96047668
	•		4				96177692	96338741
SE1.100.100.75		•	4	96102111			96047675	96047682
	•		4				96177693	96338742
SE1.100.150.40		•	4	96102114			96048117	96048125
	•		4				96177694	96338743
SE1.100.150.55		•	4	96102117			96048133	96048140
	•		4				96177695	96338744
SE1.100.150.75		•	4	96102120			96048147	96048154
	•		4				96177696	96338745

SEV

Cast-iron impeller, pumps housing and top cover

Pump type	Sensor		Number of poles	Voltage [V]				
				3 x 400-415 DOL	3 x 380-415 DOL	3 x 220-240 DOL	3 x 380-415 Y/D	3 x 220-240 Y/D
	Yes	No		[0B]	[0D]	[0E]	[1D]	[1E]
SEV.65.65.22		•	2	96102122	96047701	96047709		
	•		2		96177697	96338766		
SEV.65.65.30		•	2	96102123	96047717	96047725		
	•		2		96177698	96338767		
SEV.65.65.40		•	2	96102125			96047733	96047741
	•		2				96177699	96338768
SEV.65.80.22		•	2	96102127	96048173	96048181		
	•		2		96177700	96338769		
SEV.65.80.30		•	2	96102128	96048189	96048197		
	•		2		96177701	96338770		
SEV.65.80.40		•	2	96102130			96048205	96048213
	•		2				96177702	96338771
SEV.80.80.11		•	4	96102132	96047748	96047754		
	•		4		96177703	96338772		
SEV.80.80.13		•	4	96102133	96047760	96047766		
	•		4		96177704	96338773		
SEV.80.80.15		•	4	96102134	96047772	96047778		
	•		4		96177705	96338774		
SEV.80.80.22		•	4	96102135	96047785	96047793		
	•		4		96177706	96338775		
SEV.80.80.40		•	2	96102138			96047833	96047841
		•	4	96102136			96047801	96047817
	•		2				96177708	96338777
	•		4				96177707	96338776
SEV.80.80.60		•	2	96102141			96047849	96047857
	•		2				96177709	96338778
SEV.80.80.75		•	2	96102144			96047865	96047873
	•		2				96177710	96338779
SEV.80.80.92		•	2	96102147			96047204	96047192
	•		2				96177711	96338780
SEV.80.80.110		•	2	96102150			96047881	96047889
	•		2				96177712	96338781
SEV.80.100.11		•	4	96780764	96780714	96780715		
	•		4		96780734	96780735		
SEV.80.100.13		•	4	96780765	96780716	96780717		
	•		4		96780736	96780737		
SEV.80.100.15		•	4	96780766	96780718	96780719		
	•		4		96780738	96780739		
SEV.80.100.22		•	4	96780767	96780720	96780721		
	•		4		96780740	96780741		
SEV.80.100.40		•	2	96780769			96780724	96780725
		•	4	96780768			96780722	96780723
	•		2				96780744	96780745
	•		4				96780742	96780743
SEV.80.100.60		•	2	96780770			96780726	96780727
	•		2				96780746	96780747
SEV.80.100.75		•	2	96780771			96780728	96780729
	•		2				96780748	96780749
SEV.80.100.92		•	2	97685006			96780730	96780731
	•		2				96780750	96047173
SEV.80.100.110		•	2	97685021			96780732	96780733
	•		2				96780752	96780753
SEV.100.100.30		•	4	96102152	96047897	96047913		
	•		4		96177713	96338782		
SEV.100.100.40		•	4	96102154			96047929	96047937
	•		4				96177714	96338783
SEV.100.100.55		•	4	96102157			96047945	96047953
	•		4				96177715	96338784
SEV.100.100.75		•	4	96102160			96047961	96047969
	•		4				96177716	96338785

Note: The range is also available with trimmed impeller to meet a specific duty point. Contact Grundfos for more information.
Note: The range is also available in stainless steel variants, combined with Ex version with sensors. Contact Grundfos for more information.

6. Variants

List of variants

Motor

Various cable lengths	**Note:** When you use a cable length different from the standard length, calculate a new cable cross section.	15 m
		20 m
		25 m
		30 m
		40 m
		50 m
EMC power cables	Screened power cables designed for frequency converter operation.	10 m
		15 m
		20 m
		25 m
		30 m
		40 m
		50 m

Tests

Note: Specify all requests regarding test when you order the pump.

Test at specified duty on standard impeller curve		
Trimmed impeller for specified duty test*		
Additional test of entire QH curve (including report)	5-10 duty points from the pump performance curve.	
Different test standard	Efficiency guaranteed by Grundfos.	ISO 9906:2012 grade 1B tolerance
		ISO 9906:2012 grade 2B tolerance
Customer-requested duty point	Test according to the customer-specified duty point on standard pump curve. Contact Grundfos.	ISO 9906:2012 grades 1 and 2 tolerances
Vibration test (including report)	According to the Grundfos factory quality standard.	
String test	Contact Grundfos.	
Witness test	Contact Grundfos.	

Certificates

ATEX-approved pump report	Special Grundfos report. Contact Grundfos.	
Certificate of compliance with order	According to EN10204 2.1.	According to ISO 9906:2012 grades 1, 2 and 3B.
Pump certificate	According to EN10204 2.2.	According to ISO 9906:2012 grades 1, 2 and 3B.
Inspection certificate	According to EN10204 3.1.	According to ISO 9906:2012 grades 1, 2 and 3B.
Material specification report	According to EN10204 3.1B.	
Material report with certificate	According to EN10204 3.2.	Material supplier information.
Inspection certificate, Lloyds Register	According to EN10204 3.2.	
Inspection certificate, DNV (Det Norske Veritas)	According to EN10204 3.2.	
Inspection certificate, Germanischer Lloyd	According to EN10204 3.2.	
Inspection certificate, American Bureau of Shipping	According to EN10204 3.2.	
Inspection certificate, Bureau Veritas	According to EN10204 3.2.	
Registro Italiano Navale Agenture	According to EN10204 3.2.	
Other third-party test certificates	Contact Grundfos.	

Miscellaneous

Solution	Customer benefits	
FKM sealing (optional)	• Resistant to acids • resistant to mineral oils and vegetable oils • resistant to most solvents (toluene, petrol, trichloroethylene etc.).	Contact Grundfos.
Cable protection hose	• Resistant to acids • resistant to most oils • resistant to most solvents etc.	Contact Grundfos.
Heavy-duty wear ring kit	• Wear and seal ring kit for the handling of abrasive media • increased wear resistance of impeller in abrasive applications • increased reliability and life of pump.	Contact Grundfos.
Aluminium anodes	• Increased life of pumps in aggressive environments such as maritime applications • increased corrosion resistance.	Contact Grundfos.
Stainless steel SuperVortex impeller according to EN 1.4517	Increased wear resistance	Contact Grundfos.
Ceramic coating of impeller and pump housing	• Reduced wear rate of cast-iron parts • increased corrosion resistance • beneficial in case of low number of operating hours.	Contact Grundfos.
Extra epoxy coating, 300 µm		Contact Grundfos.
Top coating (black RAL9005, red RAL3000 and other colours)		Contact Grundfos.
Special packaging		Contact Grundfos.
Special nameplate		Contact Grundfos.
Other variants		Contact Grundfos.

* SEV impellers can be trimmed on request.

7. Construction

SE1

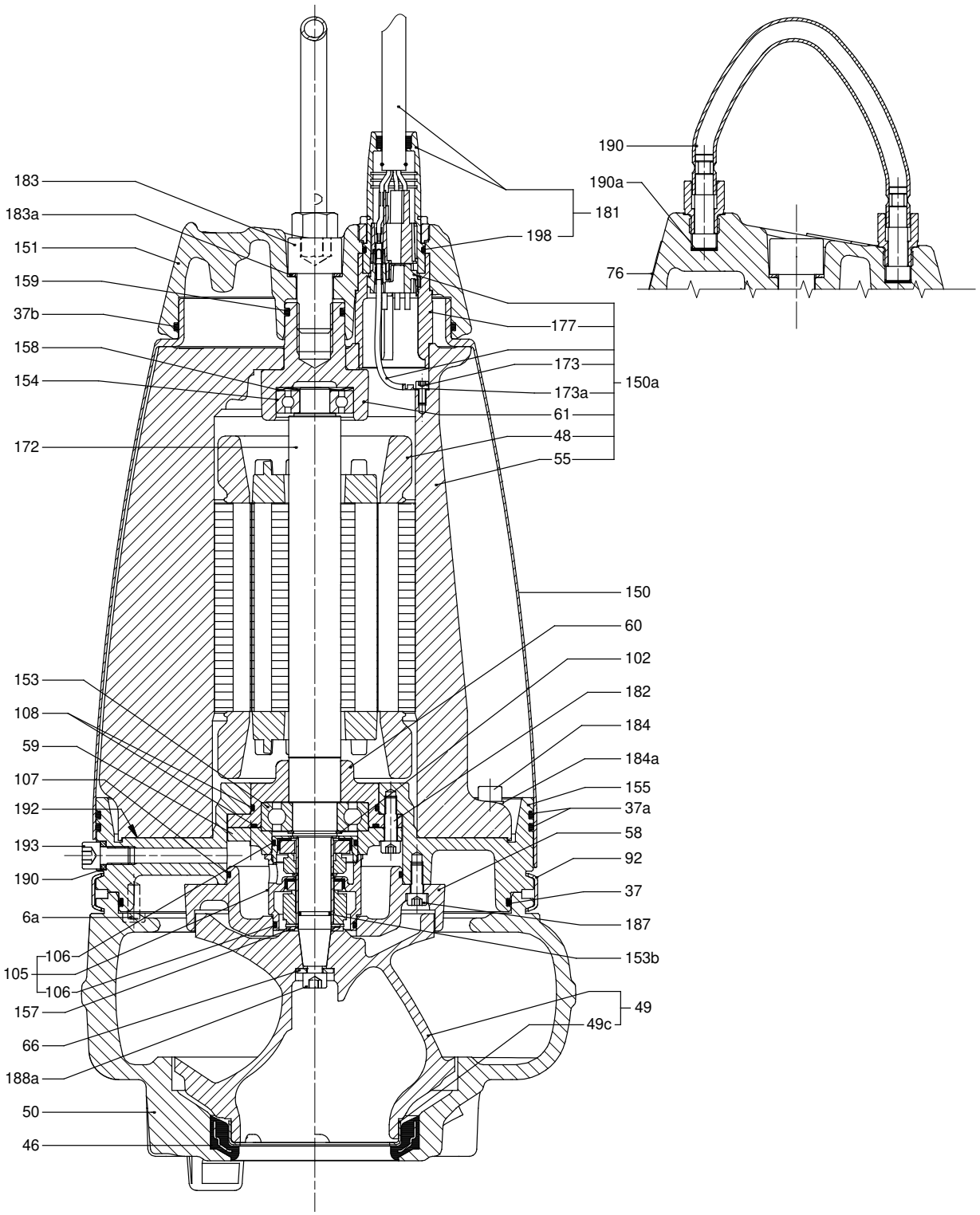

Fig. 6 Sectional drawing, SE1 pump with S-tube® impeller

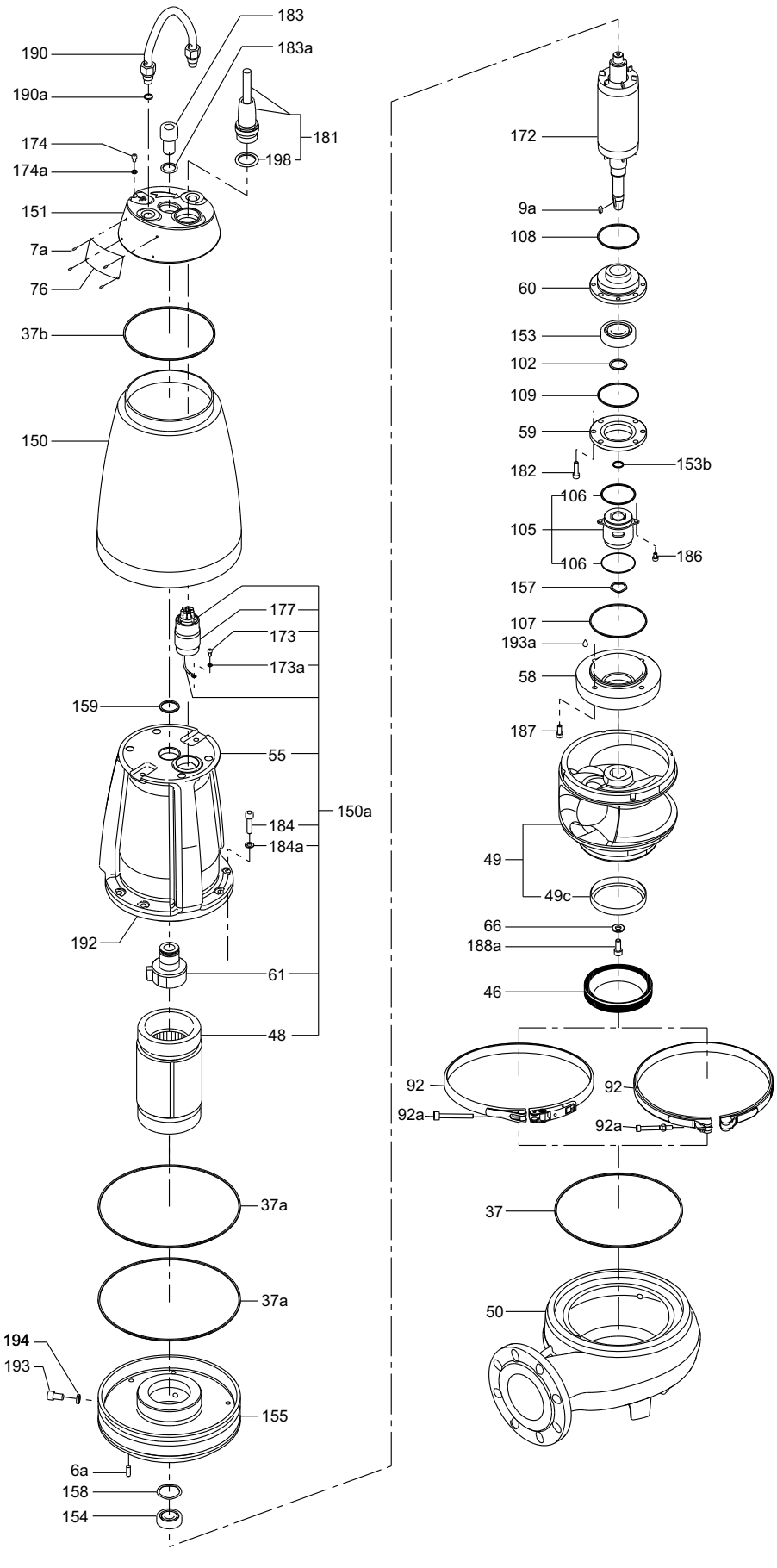

Fig. 7 Exploded view, SE1 pump with S-tube® impeller

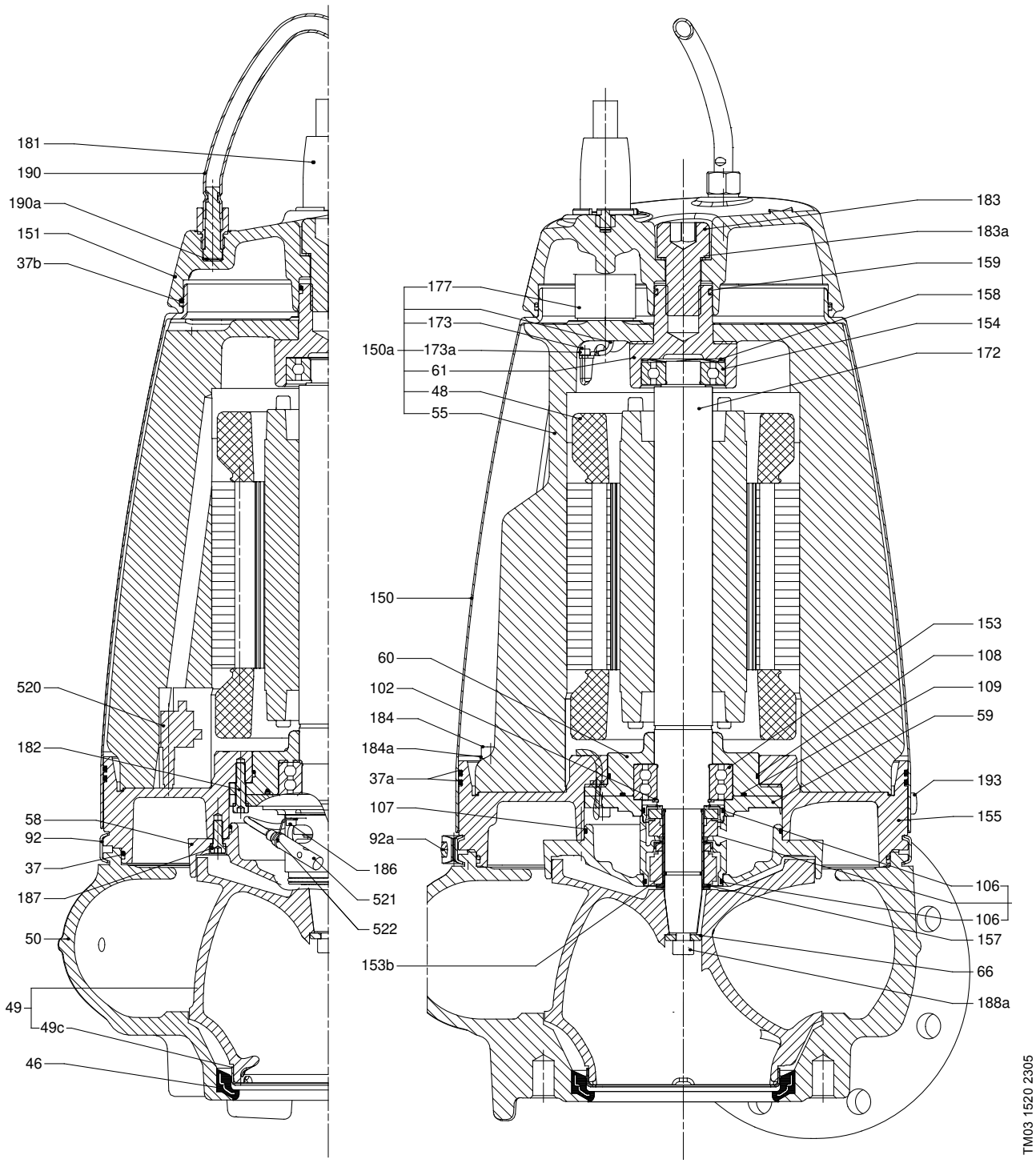

Fig. 8 Sectional drawing, SE1 pump with S-tube® impeller, sensor version

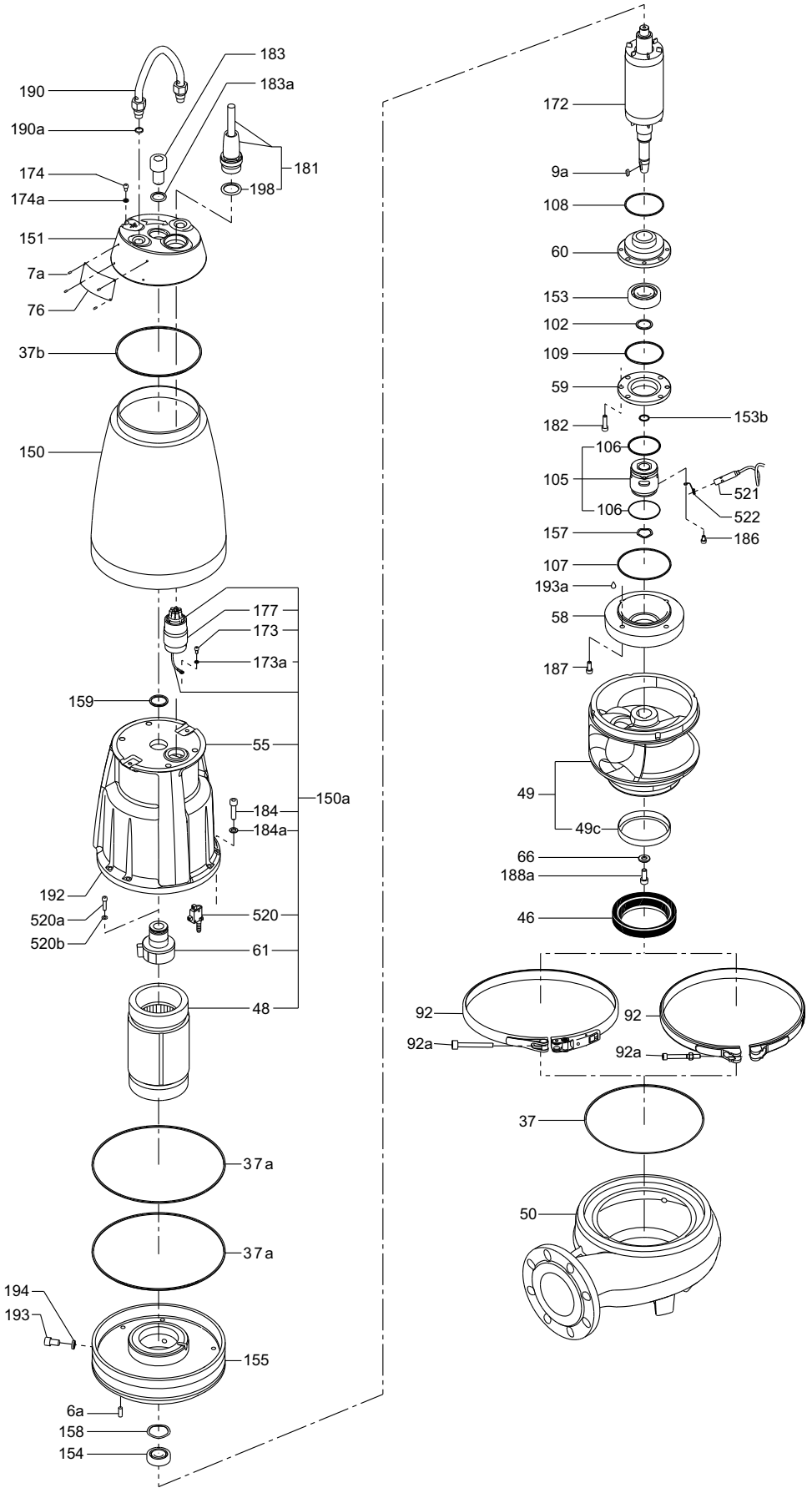

Fig. 9 Exploded view, SE1 pump with S-tube® impeller, sensor version

SEV

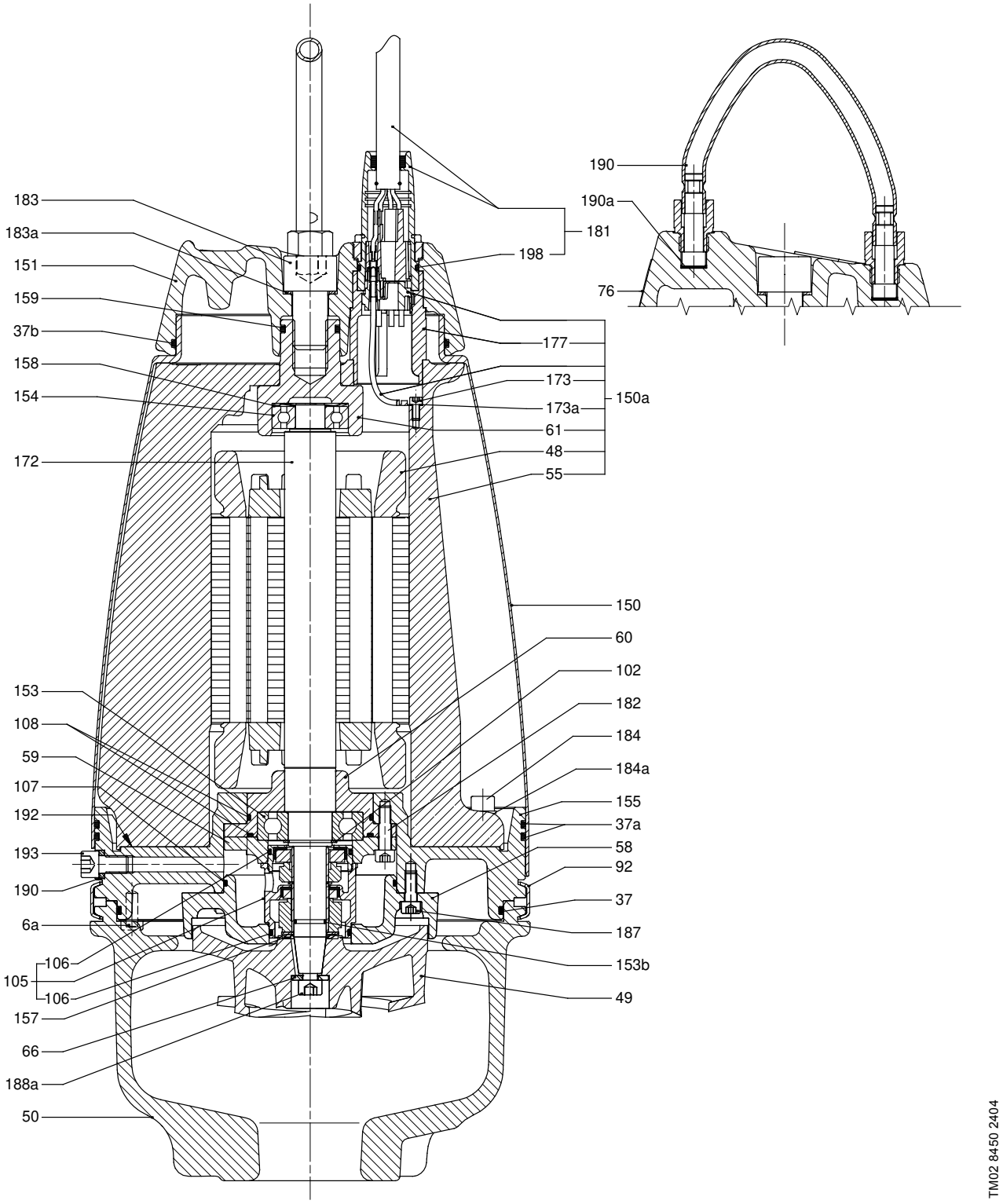

Fig. 10 Sectional drawing, SEV pump with SuperVortex impeller

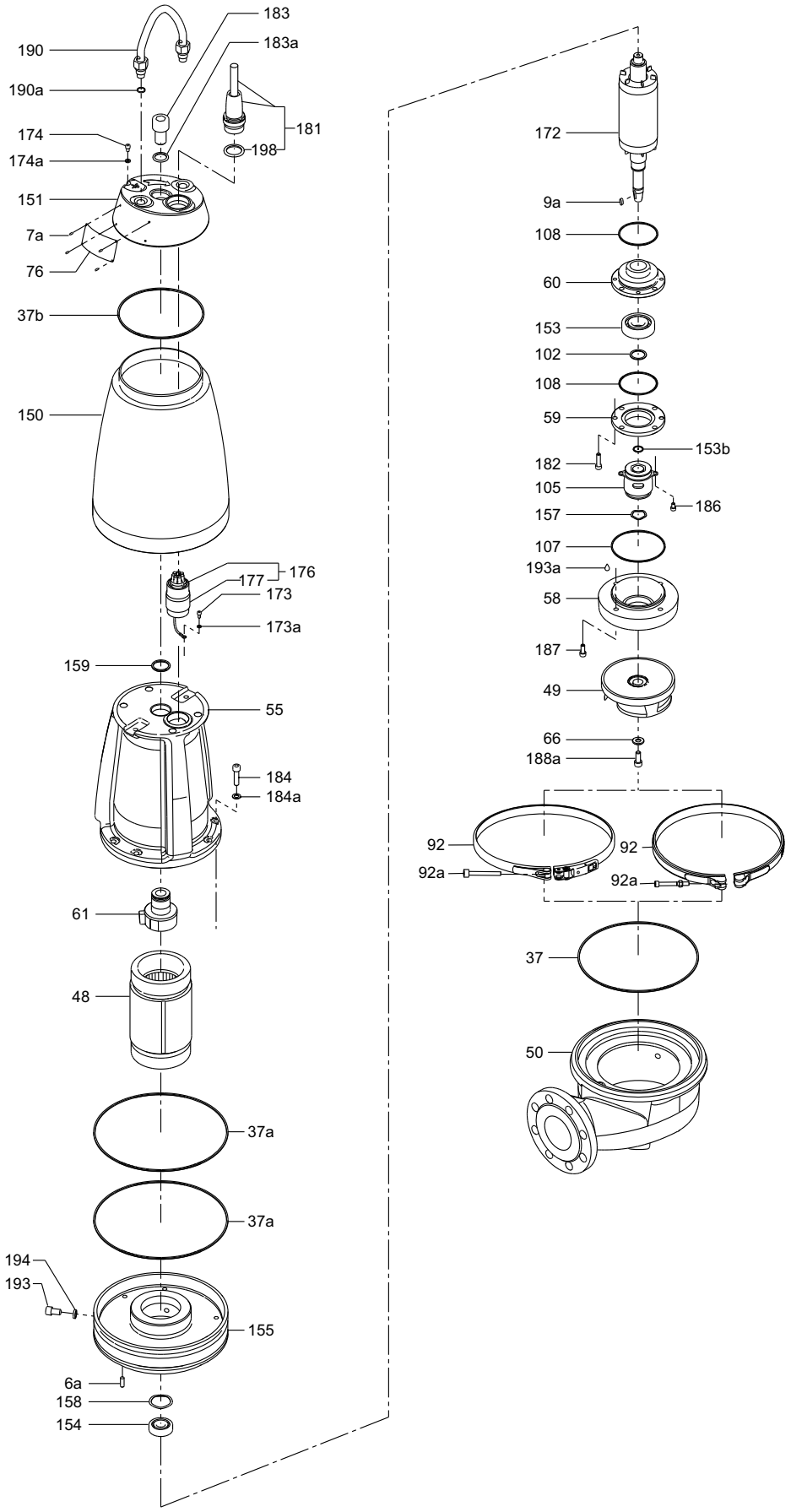

Fig. 11 Exploded view, SEV pump with SuperVortex impeller

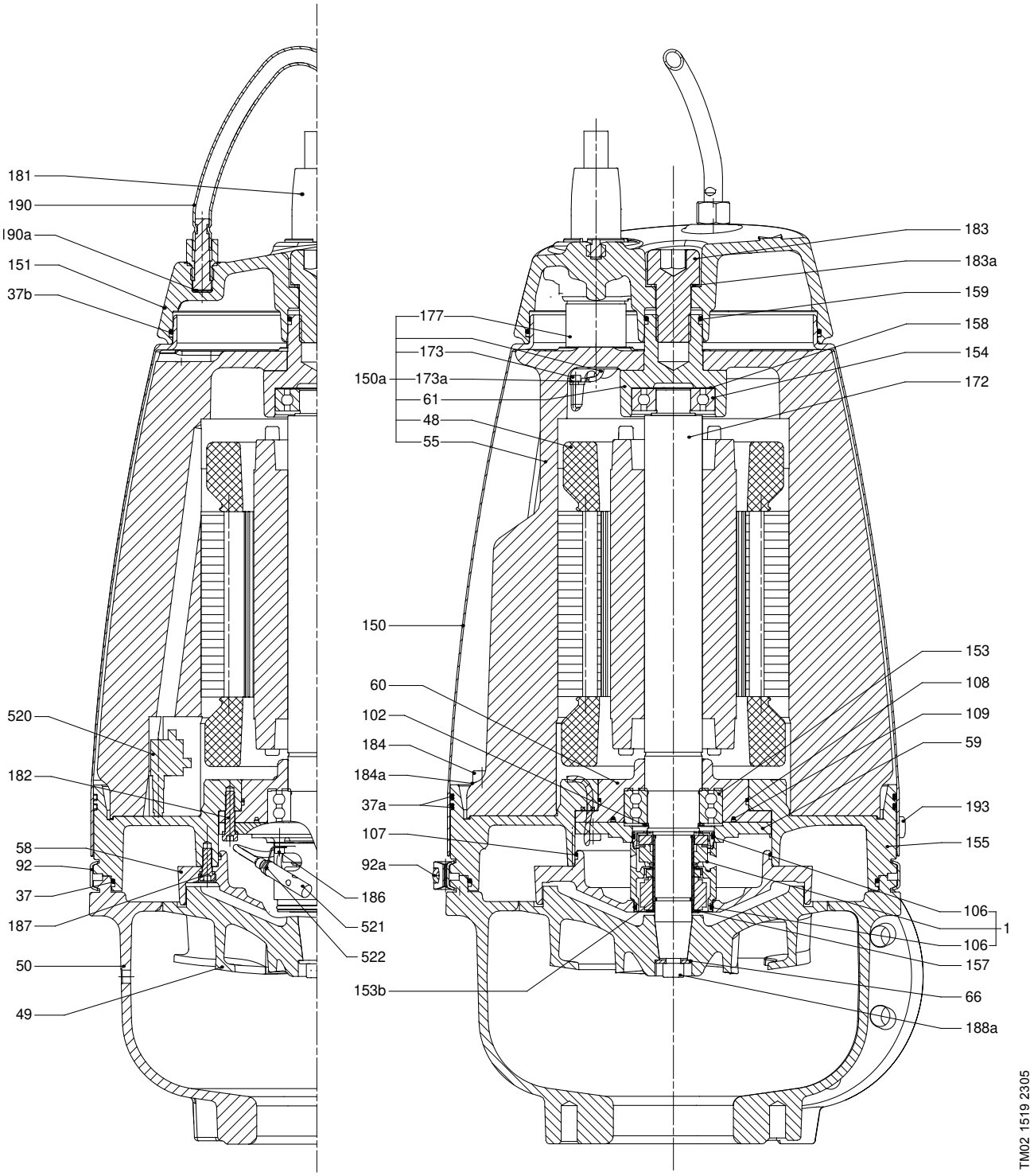

Fig. 12 Sectional drawing, SEV pump with SuperVortex impeller, sensor version

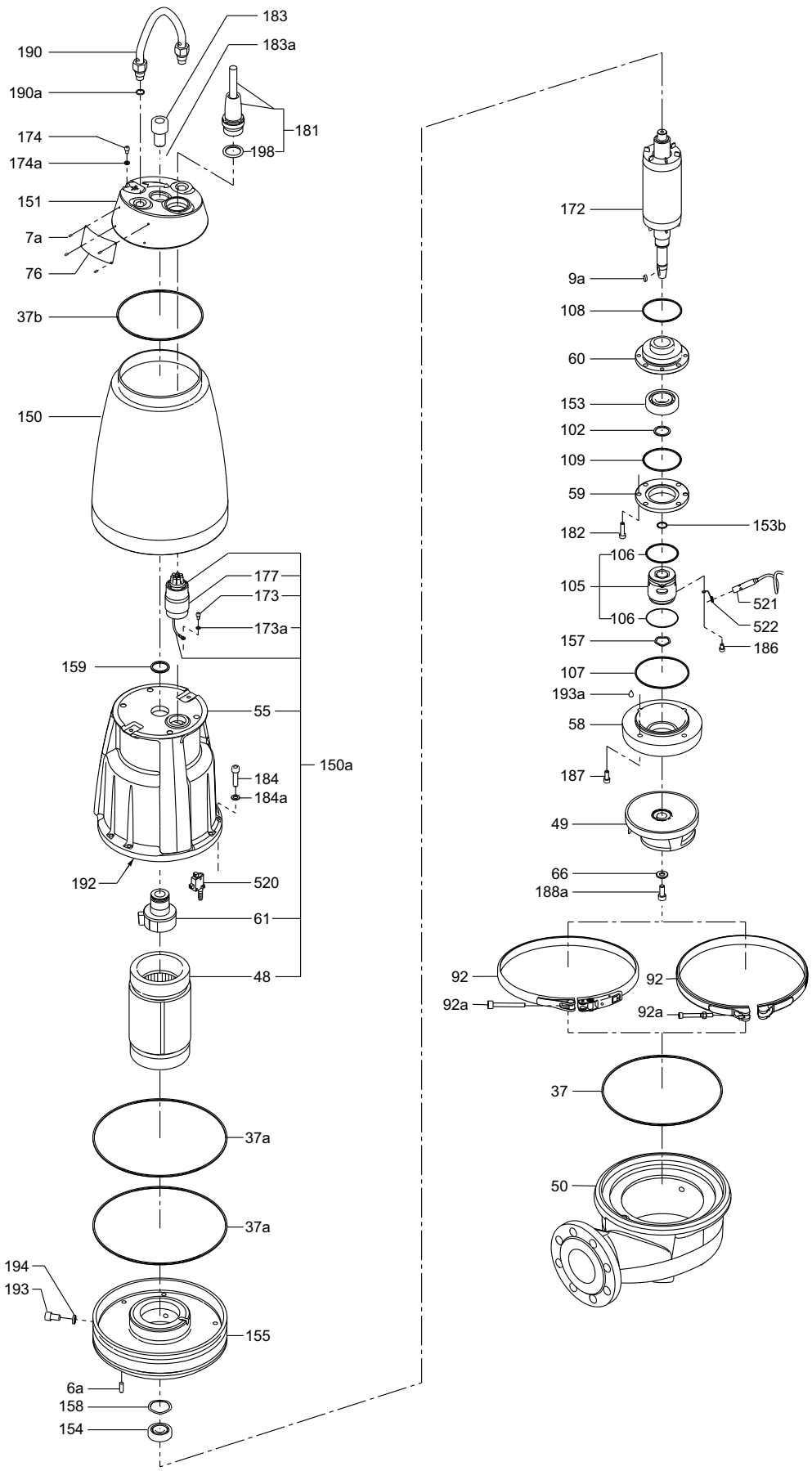

Fig. 13 Exploded view, SEV pump with SuperVortex impeller, sensor version

Material specification

Pos.	Designation	Material	DIN W.-Nr./ EN standard
6a	Tubular pin	Stainless steel	1.4301
7a	Blank rivet	Stainless steel	1.4301
9a	Key	Stainless steel	
37	O-ring	NBR rubber	
37a	O-ring	NBR rubber	
37b	O-ring	NBR rubber	
46	Seal ring, inlet	Stainless steel	1.4301
48	Stator package		
49	SuperVortex impeller	Cast iron/stainless steel	EN-GJL-200/ EN-GJL-250
	S-tube® impeller	Cast iron	EN-GJL-250
49c	Wear ring	Stainless steel	1.4301
50	Pump housing	Cast iron	EN-GJL-200/ EN-JL1030
55	Stator housing	Aluminium	EN AB-AISi 10 mg
58	Cover for oil chamber	Cast iron	EN-GJL-200/ EN-JL1030
59	Bearing cover	Cast iron	EN-GJL-250/ EN-JL1040
60	Bearing retainer, lower	Cast iron	EN-GJL-250/ EN-JL1040
61	Bearing retainer, upper	Cast iron	EN-GJS-450-10/E N-JS1040
66	Washer	Stainless steel	1.4305
76	Nameplate	Stainless steel	1.4401
92	Clamp	Stainless steel	1.4401
92a	Screw	Stainless steel	
102	O-ring	NBR rubber	
105	Shaft seal complete	Primary seal, stainless steel, SiC/SiC	
		Secondary seal, carbon/ceramics	
106	O-ring	NBR rubber	
107	O-ring	NBR rubber	
108	O-ring	NBR rubber	
109	O-ring	NBR rubber	
150	Sleeve	Stainless steel	1.4301/ (optionally 1.4401)
150a	Stator housing complete		
151	Motor top	Cast iron	EN-GJL-250/ EN-JL1040
153	Ball bearing, lower	6306.2CS.C4.STG	
153b	Retaining ring		
154	Ball bearing, upper	6304.2Z.C3.BQH	
155	Intermediate flange	Cast iron	EN-GJL-250/ EN-JL1040
157	Corrugated spring	Stainless steel	
158	Corrugated spring	Carbon steel	1.1248
159	O-ring	NBR rubber	
172	Shaft with rotor	Carbon steel/ stainless steel	1.0432/ 1.4401
173	Earth screw	Stainless steel	
173a	Lock washer	Stainless steel	
174	Earth screw, external	Stainless steel	
174a	Washer	Stainless steel	
177	Plug protector	Stainless steel	1.4408
181	Cable/outer plug part	H07RN-F / -	
182	Screw	Stainless steel	
183	Screw	Stainless steel	
183a	Washer	Stainless steel	
184	Screw	Stainless steel	
184a	Washer	Stainless steel	
186	Screw	Stainless steel	
188	Screw	Stainless steel	
188a	Screw	Stainless steel	
190	Lifting bracket	Stainless steel	1.4301
190a	Rubber sleeve	NBR rubber	
192	Cooling paste		
193	Screw	Stainless steel	
193a	Oil	Shell Ondina X420	
194	Gasket	Nylon	
198	O-ring	NBR rubber	
520	Moisture switch		
521	Water-in-oil sensor		
522	Bracket for WIO sensor		

Grey cast iron is manufactured according to EN 1561:2012.
Cast stainless steel is manufactured according to EN 10283:2010.

Conversion to other standards, such as AISI/ASTM, is normative, and products are not manufactured according to these.

Note: Q and R variants with SuperVortex impeller are available on request, including O-rings of FKM and intermediate flange of stainless steel.

8. Product description

Features

Ball bearings

The ball bearings are greased for life:

- Main bearings: Double-row angular contact ball bearing.
- Support bearings: Single-row deep-groove ball bearing.

Shaft seal

TM04 9827 0211

Fig. 14 Double mechanical cartridge shaft seal

The shaft seal consists of two mechanical seals and separates the motor from the pumped liquid.

The shaft seal is a cartridge seal that enables easy service. The combination of the primary and secondary seals in a cartridge results in a shorter assembly length compared to conventional shaft seals. Furthermore, this design minimises the risk of incorrect fitting.

The primary seal is SiC/SiC, and the secondary is carbon/ceramics.

Motor

The motor is a watertight, totally encapsulated motor:

- Insulation class: F (155 °C)
- Temperature rise class: F (105 °C)
- Enclosure class: IP68.

For motor protection and sensors, see *Sensors* on page 28.

Surface treatment

Grundfos SE1 and SEV pumps are given the following surface treatment:

Powder painting: NCS 9000N (black), gloss code 30, thickness 100 µm.

Power supply cables

Standard cable

Cable type [mm^2]	Outer cable diameter [mm]	Bending radius	
		Fixed [cm]	Free [cm]
Lyniflex 4 G 1.5 + 3 x 1	15.5 ± 0.5	60	90
Lyniflex 4 G 2.5 + 3 x 1	17.0 ± 0.5	66	99
Lyniflex 7 G 2.5 + 3 x 1	18.5 ± 0.5	74	111

EMC cable

Cable type [mm^2]	Outer cable diameter [mm]	Bending radius	
		Fixed [cm]	Free [cm]
3G3GC3G - F3 x 1AiC + 4 G 2.5	17.5 ± 0.5	85	170

The standard cable length is 10 m. Other cable lengths are available on request. See *List of variants*, page 16.

The cable dimensions depend on the motor size.

Cable entry

TM04 9826 0211

Fig. 15 Moisture-proof cable plug

The stainless steel plug is fastened with a union nut. The nut and O-rings provide sealing against liquid penetration.

The plug is filled with a polyamide material which is cast into the plug around the conductors of the cable to prevent moisture from penetrating into the motor via the cable core.

Sensors

TM04 9836 0211

Fig. 16 Analog water-in-oil sensor

As standard, the pump has thermal switches in the stator windings.

Customised analog sensor options

- Pt1000 sensor in motor windings for stator temperature measurements.
- The WIO sensor fitted in the oil chamber of the pump monitors if water enters the pump from the liquid side
  The sensor measures the water content (0 to 20 %) in the oil and converts the value into an analog current signal which is sent to the IO 113 sensor module. It also sends a signal if the water content is outside the normal range (warning), or if there is air in the oil chamber (alarm). The sensor is fitted in a stainless-steel tube for mechanical protection. See fig. 16.
- The moisture switch fitted in the motor chamber monitors whether water enters the pump. If moisture is detected in the motor chamber, the moisture switch will trip out and send a signal to the IO 113 sensor module.

IO 113 sensor module

TM05 4166 2112

Fig. 17 Grundfos IO 113 sensor module

The IO 113 module is a protection module for Grundfos wastewater pumps.

IO 113 has inputs for digital and analog pump sensors and can stop the pump if a sensor detects a pump fault.

IO 113 can be connected to the Grundfos Dedicated Controls system which provides advanced monitoring functions:

- stator temperature
- stator insulation resistance
- water-in-oil chamber
- moisture in motor.

Note: All pump versions with sensor come with an IO 113 sensor module. As standard, it is therefore not necessary to order an IO 113 separately.

Operating conditions

The pumps are designed for intermittent operation (S3). When completely submerged, the pump can also operate continuously (S1).

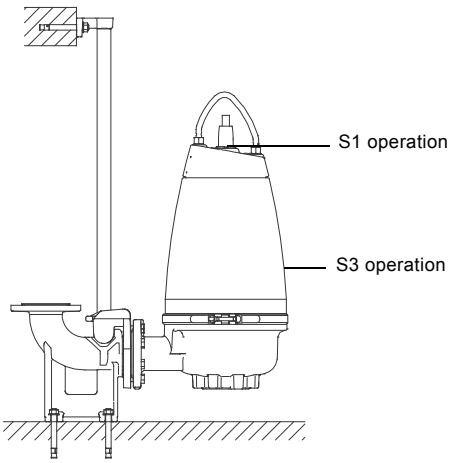

TM02 8404 5103

Fig. 18 Operating levels

S3, intermittent operation

The S3 operating mode is a series of duty cycles each with a constant load for a period followed by a rest period. Thermal equilibrium is not reached during the cycle. Pumps running in intermittent operation S3 have a maximum of 20 starts per hour when submerged to the bottom of the cable plug. The pump must run for maximum 4 minutes and stop for minimum 6 minutes. See fig. 19.

Note: Explosion-proof pumps must always be fully submerged.

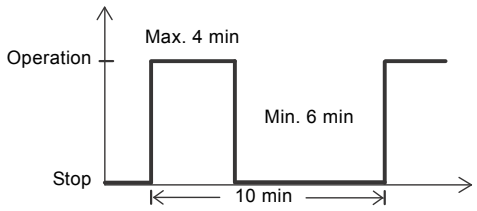

TM04 4527 1509

Fig. 19 S3 operation

S1, continuous operation

In this operating mode, the pump can operate continuously without having to be stopped for cooling. Being completely submerged, the pump is sufficiently cooled by the surrounding liquid. See fig. 20.

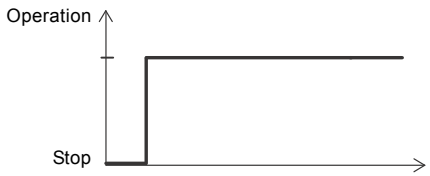

TM04 4528 1509

Fig. 20 S1 operation

Pumped liquids

Pump type	Material variant	Installation	Material	pH value
SE1/ SEV	Standard	Dry and submerged	Cast-iron pump housing and motor top.	6.5-14**
SEV	Q	Dry and submerged	Stainless steel impeller. Cast-iron pump housing and motor top.	6-14**
SEV	S*	Submerged	Stainless steel impeller and pump housing; cast-iron motor top.	5.5-14**
		Dry		1-14
SEV	R	Dry and submerged	Complete pump in stainless steel	1-14
SEV	D[1)]	Dry and submerged	Stainless steel pump according to EN 1.4517/1.4539	0-14

* Material variants S and D are available on request.

** For fluctuating pH values, the range is 4 to 14 pH.

Liquid temperature

0-40 °C.

When pumping liquids with a density and/or a kinematic viscosity higher than that of water, use motors with correspondingly higher outputs.

For short periods of maximum 1 hour, a temperature of up to 60 °C is permissible. This only applies to non-Ex versions.

Sound pressure level

The sound pressure level of the pump is lower than the limiting values stated in the EC Council directive 2006/42/EC relating to machinery (the EC Machinery Directive).

Motor range

Output power [kW]	Number of poles
1.1	4
1.3	4
1.5	4
2.2	2/4
3	2/4
4	2/4
5.5	4
6	2
7.5	2/4
9.2	2
11	2

Approvals

Standard versions of SE1 and SEV have been tested by VDE. Explosion-proof versions have been approved by DEKRA according to the ATEX directive.

Approval standards

Standard versions have been approved by LGA (notified body under the Construction Products Directive) according to EN 12050-1 or EN 12050-2, as specified on the pump nameplate.

Explanation to the Ex approval

The SE1 and SEV pumps have the following explosion-protection classifications:

- Pumps without sensor:
  CE 0344 Ⓔx II2 GD Ex db h IIB T4, T3 Gb: Ex h tb IIIC T135 °C,T200 °C Db.
- Pumps with sensor:
  CE 0344 Ⓔx II2 GD Ex db h mb IIB T4, T3 Gb: Ex h mb tb IIICT135 °C,T200 °C Db.

Directive or standard	Code		Description
ATEX	CE 0344	=	CE marking of conformity according to the ATEX directive 2014/34/EU. The number "0344" is the number of the notified body which has certified the quality system for ATEX.
	Ⓔx	=	Marking of explosion protection.
	II	=	Equipment group according to the ATEX directive, defining the requirements applicable to the equipment in this group.
	2	=	Equipment category according to the ATEX directive, defining the requirements applicable to the equipment in this category.
	G	=	Explosive atmosphere caused by gases, vapours or mists.
	D	=	Explosive atmosphere caused by dust.
Harmonised European standard EN 50014	Ex	=	The equipment conforms to the harmonised European standard.
	h	=	Constructional safety according to EN 80079-36 and 80079-37.
	db	=	Flameproof enclosure according to EN 60079-1.
	mb	=	Encapsulation according to EN 60079-18.
	IIB	=	Classification of gases according to EN 60079-0. Gas group B includes gas group A.
	T4/T3	=	Maximum surface temperature is 135 °C in direct-drive pumps and 200 °C in pumps driven by frequency converter, according to EN 60079-0*.
	tb	=	Protection by enclosure EN 60079-31.

* For motors supplied via a frequency converter, the maximum surface temperature T3 is 200 °C.

Australia

Explosion-proof variants for Australia have been approved as Ex nA II T3 according to IEC 60079-15 (corresponding to AS 2380.9).

Standard	Code		Description
IEC 60079-15:1987	Ex	=	Area classification according to AS 2430.1
	nA	=	Non-sparking according to AS 2380.9:1991, section 3 (IEC 79-15:1987)
	II	=	Suitable for use in explosive atmospheres (not mines)
	T3	=	Maximum surface temperature is 200 °C
	X		The letter X in the certificate number indicates that the equipment is subject to special conditions for safe use. The conditions are mentioned in the certificate and the installation and operating instructions.

Controllers

The pumps must be connected to a control box with a motor protection relay with IEC trip class 10 or 15.

Note: Pumps for hazardous locations must be connected to a control box with a motor protection relay with IEC trip class 10.

Frequency converter, CUE/VFD

All pump types are designed for speed-controlled operation to keep the energy consumption at a minimum.

To avoid the risk of sedimentation in the pipes, we recommend that you operate the speed-controlled pump within a speed range of 30 % to 100 % and at a flow rate above 1 m/s.

For more information, see installation and operating instructions for the relevant frequency converter on www.grundfos.com (Grundfos Product Center).

Additional features

- Anti-blocking
- automatic energy optimisation
- specific-energy test
- output frequency
- monitoring of:
  - voltage*
  - current*
  - phase sequence*
  - power*
  - energy*
  - torque*
- reverse start
- run flushing
- stop flushing
- PID control.

* These functions are only available with a Grundfos CUE.

Level controllers

Grundfos offers a wide range of pump controllers to keep a watchful eye on liquid levels in the wastewater collecting tank, ensuring correct operation and protection of the pumps.

Controller ranges:

- Dedicated Controls, DC control cabinets
- LC and LCD level controllers.

Dedicated Controls

TM06 0918 1214

Fig. 21 Dedicated Controls control cabinet

Grundfos Dedicated Controls is a control system that can control and monitor one to six Grundfos wastewater pumps and a mixer or a flush valve.

Dedicated Controls is used in installations requiring advanced control and data communication.

The main components of the Dedicated Controls system are as follows:

- CU 362 control unit
- IO 351B module (general I/O module).

Dedicated Controls is available either as separate components or as control cabinets.

The control system can be operated by the following:

- float switches
- a level sensor
- a level sensor and safety float switches.

The control cabinet is available for the following pump sizes and starting methods:

- pumps up to and including 9 kW, direct-on-line starting
- pumps up to and including 30 kW, star-delta starting
- pumps up to and including 30 kW, soft starter.

The separate control unit and modules can be built for practically any size of system.

The DC control cabinets can be fitted with various units:

- The CU 362 control unit, which is the "brain" of the Dedicated Controls system, is fitted in the cabinet front. CU 362 can be fitted with one of the Grundfos CIM communication modules mentioned below, depending on the monitoring needs or the SCADA system:
  - CIM 202 is a communication module used for the Modbus RTU fieldbus protocol.
  - CIM 252 is a communication module used for GSM/GPRS communication. CIM 252 establishes communication between CU 362 and a SCADA system, thereby allowing the application to be monitored and controlled remotely. This module also offers SMS messaging, for example status and alarm messages.
  - CIM 272 is a communication module for the Grundfos Remote Management system (GRM). CIM 272 establishes communication between CU 362 and GRM, thereby allowing the application to be monitored and controlled remotely.
- The IO 351B module is a general I/O module. IO 351B communicates with CU 362 via GENIbus.
- The MP 204 motor protector (optional) provides many electrical status values, for example voltage, current, power, insulation resistance and energy. MP 204 offers better protection of the pumps than a conventional motor protection device.
- CUE/VFD (optional), which is either a Grundfos variable-frequency converter or a general variable-frequency converter, (also) offers better pump protection and a more steady flow through the pit pipes, so the pumps are treated well and the energy consumption is kept at a minimum.

For further information, see the data booklet or installation and operating instructions for Dedicated Controls on www.grundfos.com (Grundfos Product Center).

LC and LCD

The Grundfos LC and LCD range of level controllers comprises three series with a total of six variants:

- LC and LCD 107 operated by air bells
- LC and LCD 108 operated by float switches
- LC and LCD 110 operated by electrodes.

All controllers are ideally suited for applications requiring up to 11 kW motors for direct-on-line starting. The LC and LCD can also be supplied with an integrated star-delta starter for applications requiring larger motors up to and including 30 kW.

Features and benefits

- Control of one pump (LC) or two pumps (LCD).
- Automatic alternating operation of two pumps (LCD).
- Automatic test run (prevents shaft seals from becoming jammed in the event of long periods of inactivity).
- Water hammer protection.
- Starting delay after power supply failure.
- Automatic alarm resetting, if required.
- Automatic restarting, if required.
- Alarm output as NO and NC.

TM04 2360 2408

Fig. 22 LCD 110 for two-pump installations

When an SMS module (optional) is fitted in an LC or LCD controller, it acts as a time recorder for the pumps. When programmed by means of an ordinary mobile phone with text messaging facility, the SMS module can send text messages containing "high-level alarm" and "general alarm" information about operation and the number of times the pump has started. The SMS module is also available with battery and can thus send text messages that will inform you of power failure and when the power has been restored.

For further information, see the data booklet or installation and operating instructions for the LC and LCD controllers on www.grundfos.com (Grundfos Product Center).

Name		DC	LC	LCD
Application				
	One pump	•	•	•
	Two pumps	•		•
	Mixer	•		
	Battery backup	•		
Level sensor				
	Float switches	•	•	•
	Electrodes		•	•
	Air bells		•	•
	Pressure sensor	•		
	Ultrasonic sensor	•		
	Analog level sensor with safety float switches	•		
Starting method				
	Direct-on-line starting (DOL)	•	•	•
	Star-delta starting	•	•	•
	Soft starter	•		
Basic functions				
	Start and stop of pump(s)	•	•	•
	Pump alternation	•		•
	High-level alarm	•	•	•
	Dry-running-level alarm	•	•	•
	Flow measurement (calculated or via flow sensor)	•		
	Pump statistics	•		
	Conflicting-levels alarm	•		
Advanced functions				
	Start and stop delays (prevent water hammer)	•	•	•
	Motor temperature sensor	•	•	•
	Test run/anti-seizing	•	•	•
	Daily emptying (emptying the pit once a day)	•		
	Water-in-oil sensor input	•		
Communication				
	SMS messaging	•[1)]	•[2)]	•[2)]
	SCADA communication (GSM/GPRS)	•[1)]		
User interface				
	Level indication	•	•	•
	Graphical display	•		
	PC Tool WW Controls	•		

[1)] This only applies if a CIM 250 GSM/GPRS module is fitted in the CU 362.
[2)] This only applies if an SMS module is fitted.

Wiring diagrams

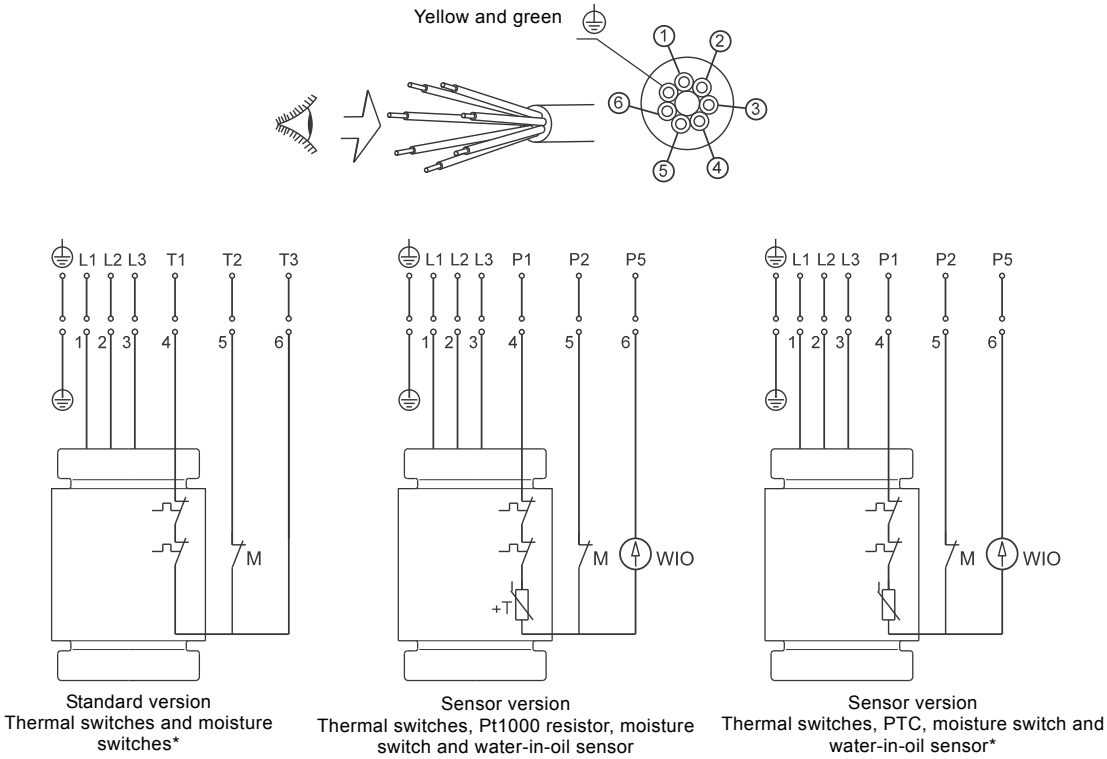

TM04 6884 1317

* Pumps from 4 kW and up sold in Australia and New Zealand are fitted with a PTC thermistor.

Fig. 23 Wiring diagram, 7-core cable, DOL

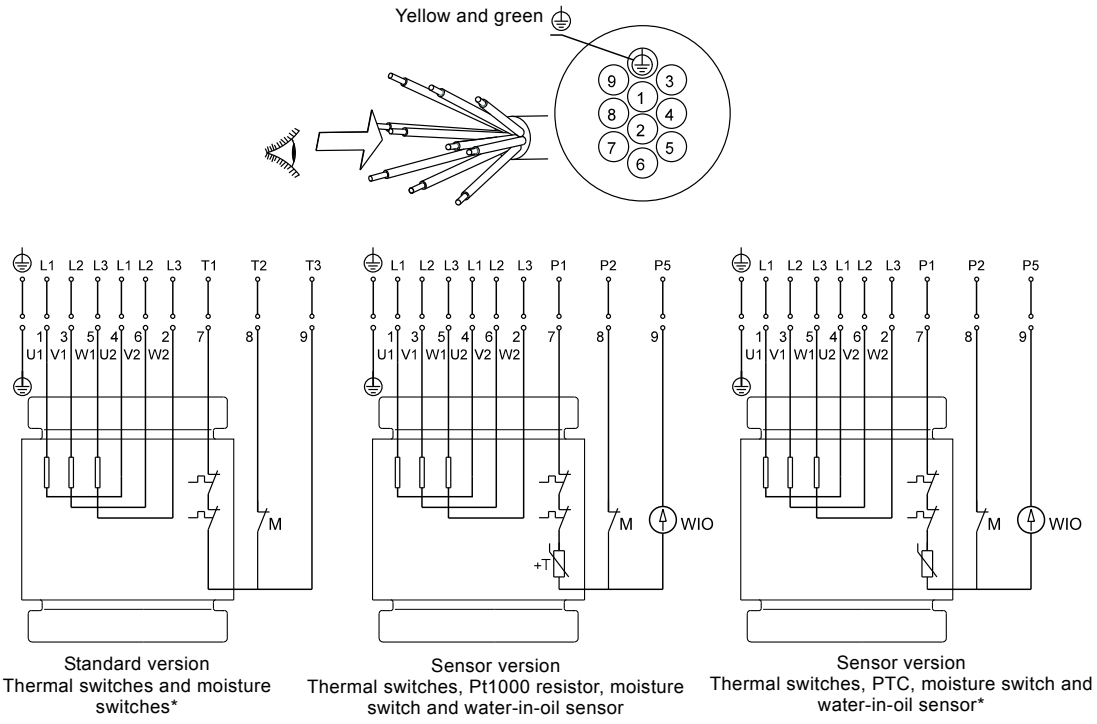

TM04 6885 1317

* Pumps from 4 kW and up sold in Australia and New Zealand are fitted with a PTC thermistor.

Fig. 24 Wiring diagram, 10-core cable, star/delta (Y/D)

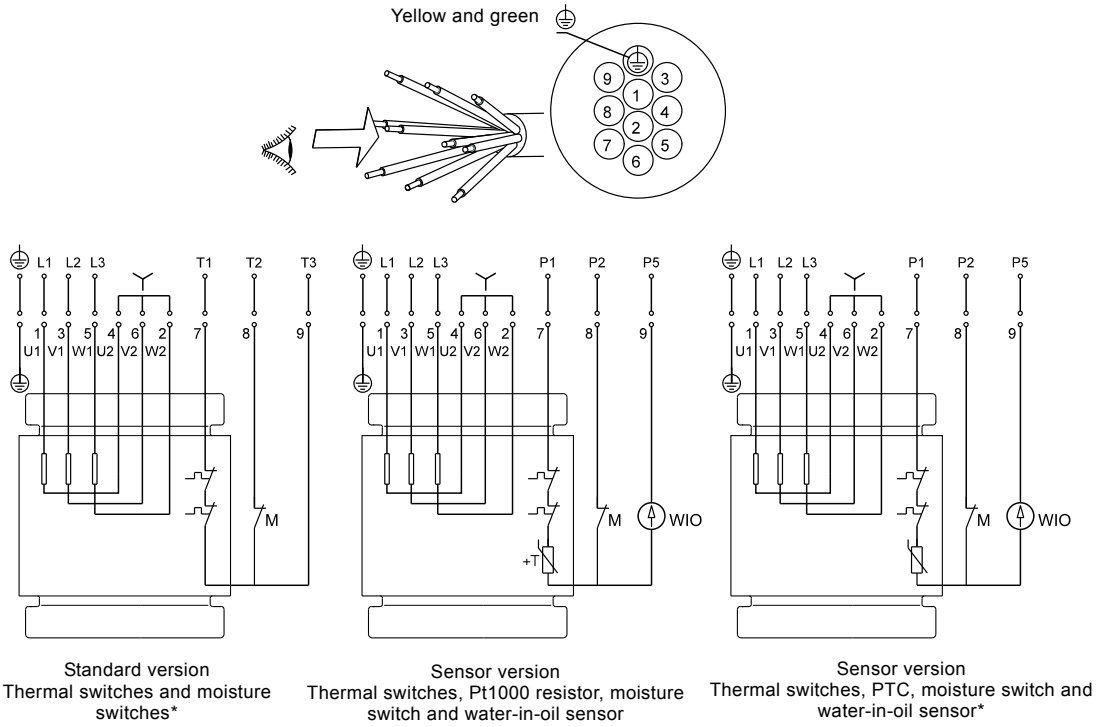

TM04 6886 1317

* Pumps from 4 kW and up sold in Australia and New Zealand are fitted with a PTC thermistor.

Fig. 25 Wiring diagram, 10-core cable, star-connected (Y)

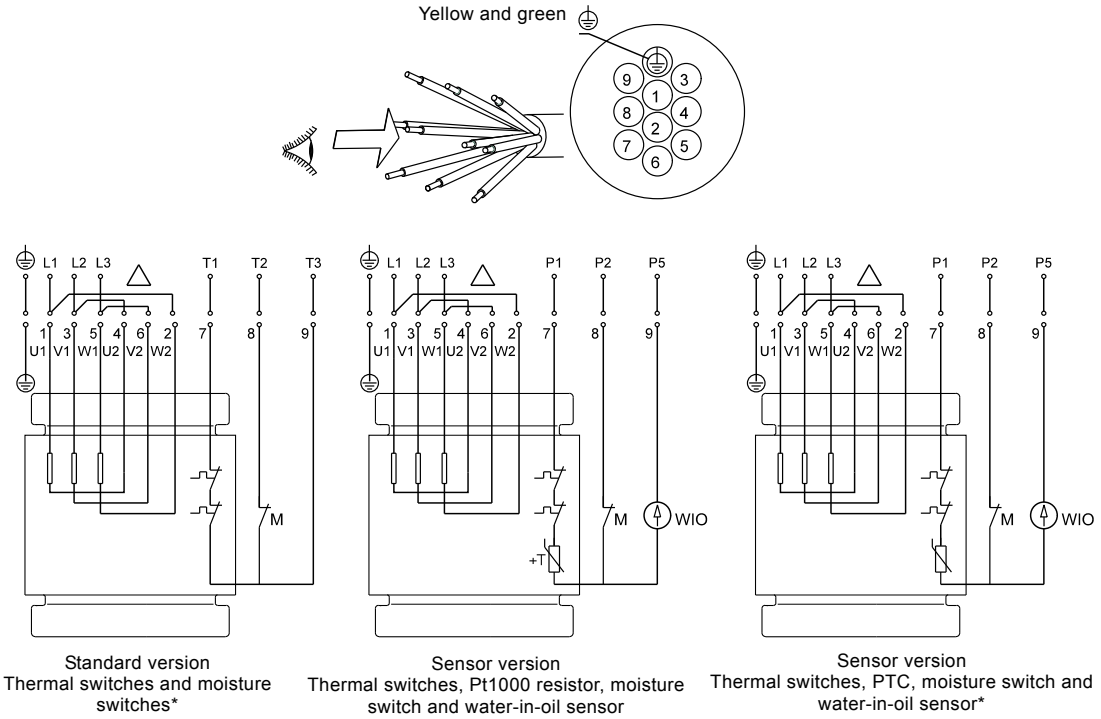

TM04 6887 1317

* Pumps from 4 kW and up sold in Australia and New Zealand are fitted with a PTC thermistor.

Fig. 26 Wiring diagram, 10-core cable, delta-connected (D)

9. Curve charts

How to read the performance curves

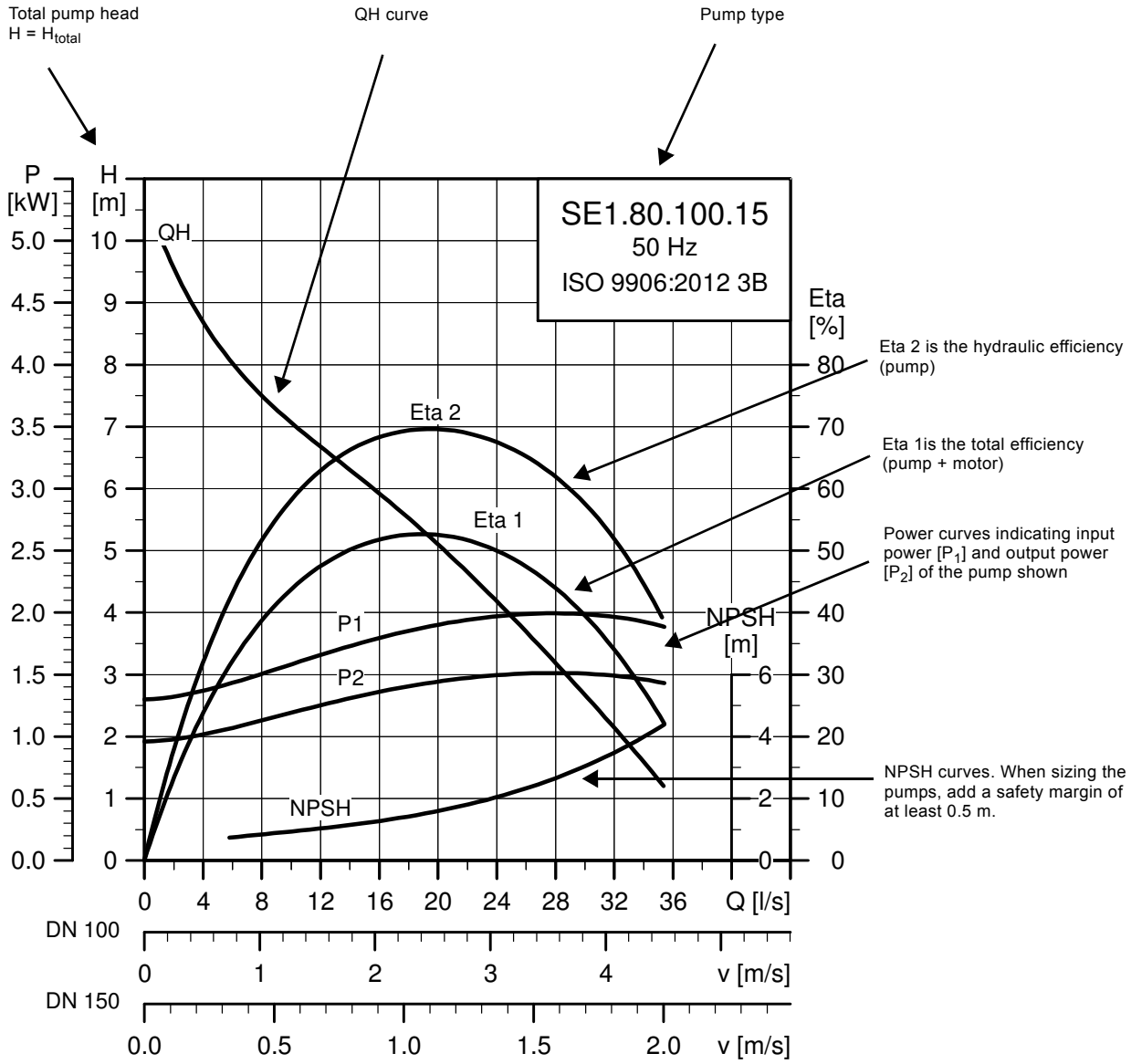

Note: The pumps are tested according to ISO 9906:2012 grade 3B tolerance. Testing equipment and measuring instruments are designed and calibrated according to the standards mentioned. The pumps are approved according to tolerances for entire curves, specified in grade 3B.

Curve conditions

The guidelines below apply to the curves on pages 38 to 91.

- Tolerances are according to ISO 9906:2012, grade 3B.
- The curves show pump performance with different impeller diameters at the rated speed.
- The curves apply to the pumping of airless water at a temperature of +20 °C and a kinematic viscosity of 1 mm^2/s (1 cSt).
- The Eta curves show the efficiency of the pump for the different impeller diameters.
- The NPSH curves show average values measured under the same conditions as the performance curves.
  When sizing the pump, add a safety margin of at least 0.5 m.
- In the case of densities other than 1000 kg/m^3, the outlet pressure is proportional to the density.
- When pumping liquids with a density higher than 1000 kg/m^3, use motors with correspondingly higher outputs.

Calculation of total head

The total pump head consists of the height difference between the measuring points + the differential head + the dynamic head.

$$H_{total} = H_{geo} + H_{stat} + H_{dyn}$$

H_{geo}: Height difference between measuring points.
H_{stat}: Differential head across the pump.
H_{dyn}: Calculated values based on the velocity of the pumped liquid on the suction and discharge sides of the pump.

Performance tests

Pumps are tested according to ISO 9906:2012 grade 3B.

Testing equipment and measuring instruments are designed and calibrated in accordance with mentioned standards.

The pump is approved according to tolerances for the entire curve, specified in grade 3B.

For customised duty point or other grades with 5-point test certificate, please contact Grundfos in order to agree on terms before ordering.

If the customer requires either more points on the curve to be checked or certain minimum performances or certificates, individual measurements must be made, and you can order a certificate.

Certificates

Certificates have to be confirmed for every order and are available on request as follows:

- certificate of compliance with the order (EN 10204-2.1)
- pump test sheet.

Witness test

It is possible for the customer to witness the testing procedure according to ISO 9906:2012, grade 3B.

The witness test is not a certificate and will not result in a written statement from Grundfos. The witness test only guarantees that everything is carried out as prescribed in the testing procedure.

If the customer wants to carry out a witness test of the pump performance, such request must be stated on the order.

10. Performance curves and technical data

SE1.50.65.22.(Ex).2

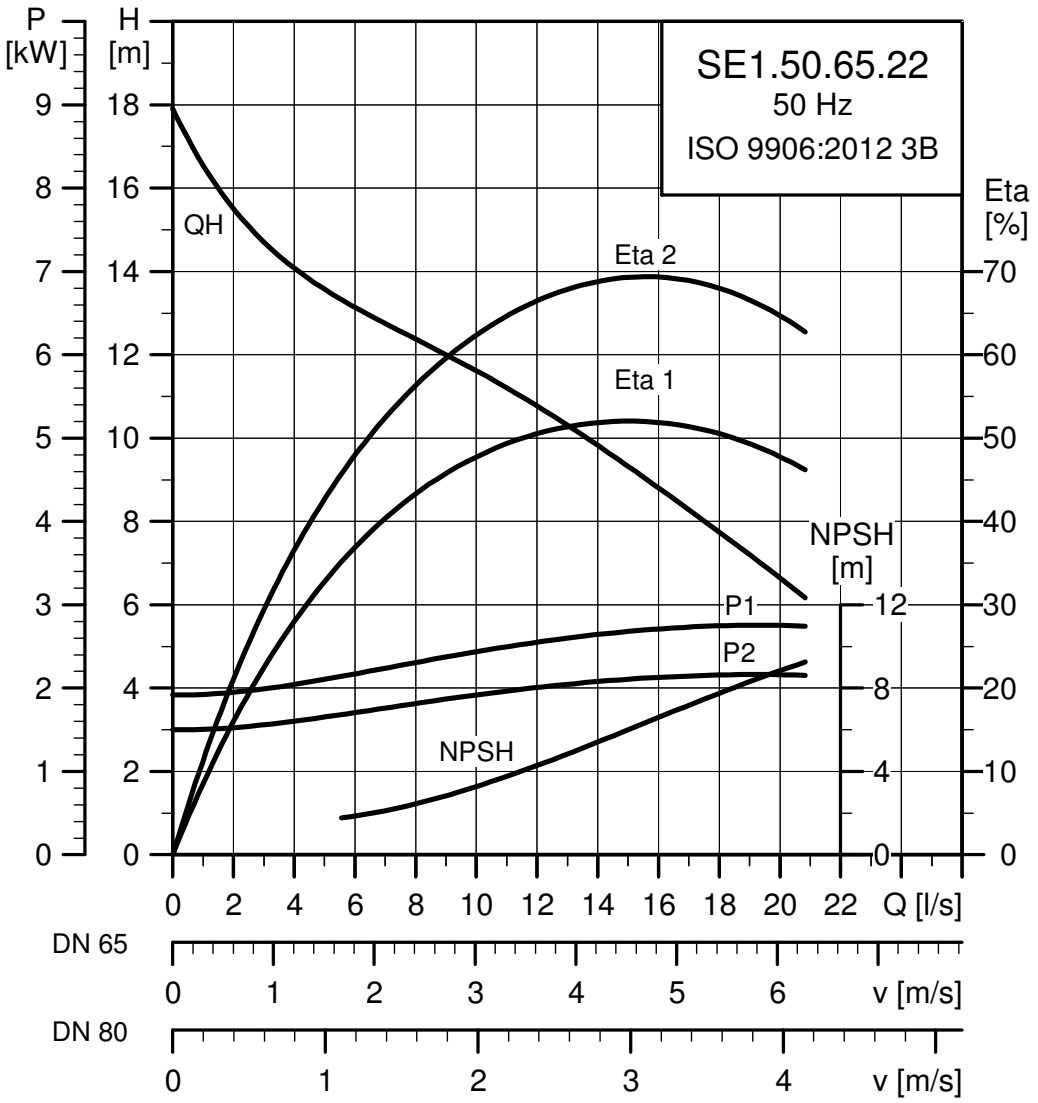

Electrical data

Voltage [V]	P1 [kW]	P2 [kW]	Number of poles	Rpm	Starting method	I_N* [A]	I_{start} [A]	η_{motor} [%] 1/2	3/4	1/1	Cos φ 1/2	3/4	1/1	Moment of inertia [kgm²]	Breakdown torque $M_{max.}$ [Nm]
3 x 380-415	2.8	2.2	2	2895	DOL	8.9 - 8.7	37	73.5	76.6	77	0.72	0.81	0.86	0.0102	23

* Low voltage - high voltage.

Pump data

Impeller type	Max. solids size [mm]	Max. number of starts per hour	Max. installation depth [m]	Enclosure class	Insulation class	Max. liquid temperature [°C]	pH
S-tube®	50	20	20	IP68	F	40	4-14

SE1.50.65.30.(Ex).2

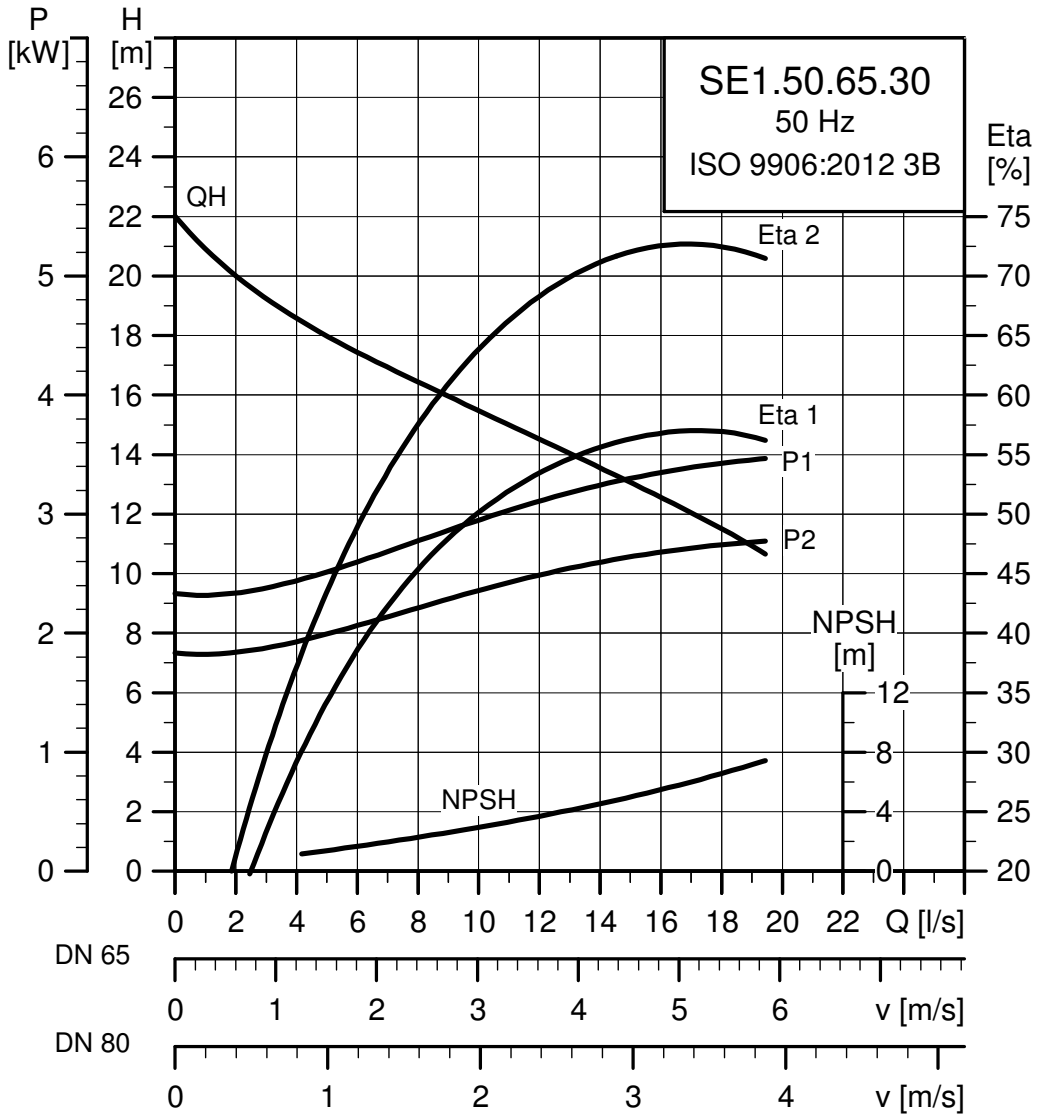

Electrical data

Voltage	P1	P2	Number of poles	Rpm	Starting method	I_N*	I_{start}	η_{motor} [%]			Cos φ			Moment of inertia	Breakdown torque $M_{max.}$
[V]	[kW]	[kW]				[A]	[A]	1/2	3/4	1/1	1/2	3/4	1/1	[kgm²]	[Nm]
3 x 380-415	3.8	3.0	2	2910	DOL	11.8 - 11.2	51	75.1	78.5	79.6	0.74	0.83	0.87	0.0123	33

* Low voltage - high voltage.

Pump data

Impeller type	Max. solids size	Max. number of starts per hour	Max. installation depth	Enclosure class	Insulation class	Max. liquid temperature	pH
	[mm]		[m]			[°C]	
S-tube®	50	20	20	IP68	F	40	4-14

SE1.50.65.40.(Ex).2

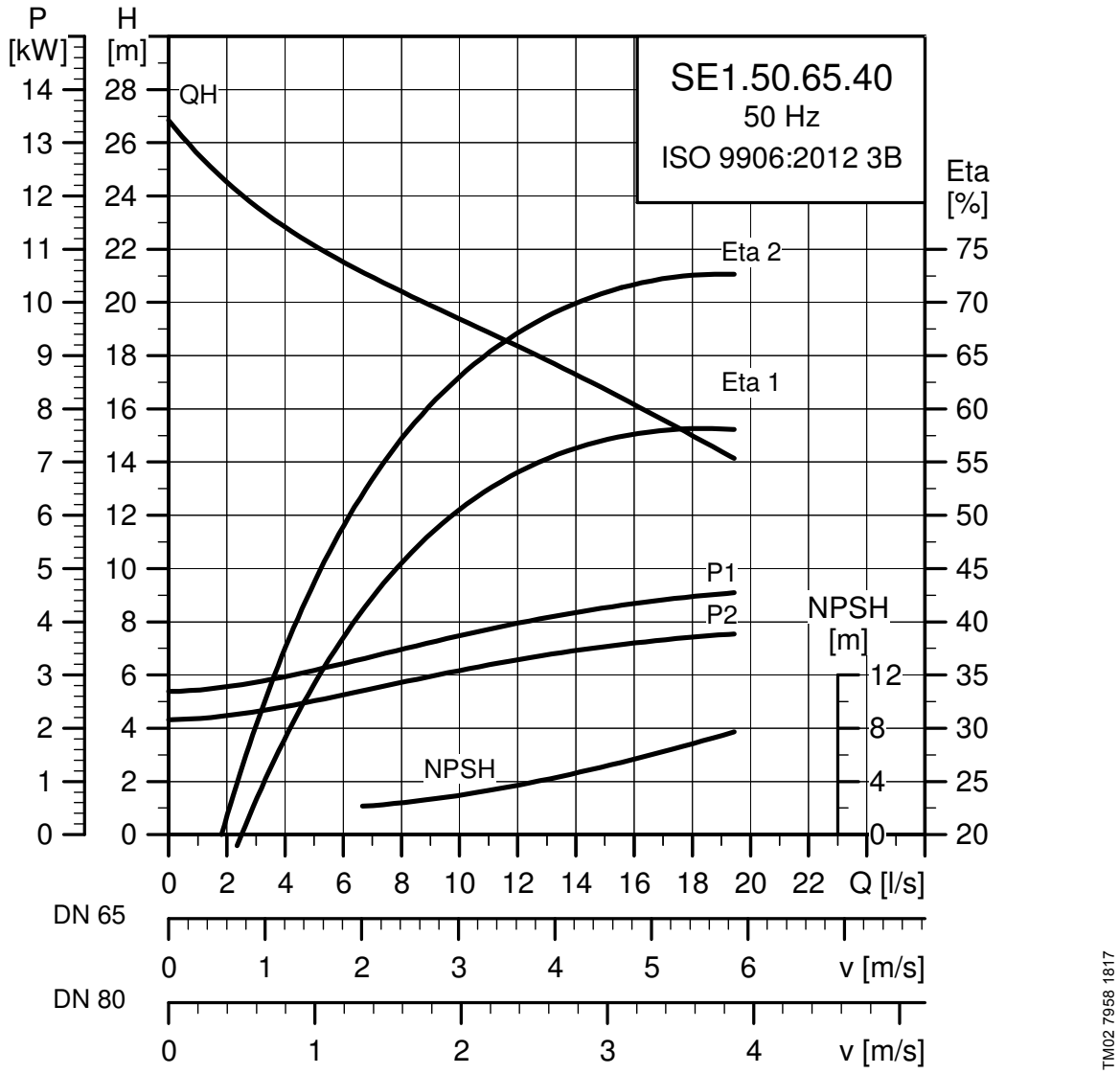

Electrical data

Voltage	P1	P2	Number of poles	Rpm	Starting method	I_N*	I_{start}	η_{motor} [%]			Cos φ			Moment of inertia	Breakdown torque $M_{max.}$
[V]	[kW]	[kW]				[A]	[A]	1/2	3/4	1/1	1/2	3/4	1/1	[kgm²]	[Nm]
3 x 380-415	4.8	4.0	2	2925	Y/D	8.7 - 8.5	71	79.2	82.4	83.3	0.68	0.78	0.84	0.0194	54

* Low voltage - high voltage.

Pump data

Impeller type	Max. solids size	Max. number of starts per hour	Max. installation depth	Enclosure class	Insulation class	Max. liquid temperature	pH
	[mm]		[m]			[°C]	
S-tube®	50	20	20	IP68	F	40	4-14

SE1.50.80.22.(Ex).2

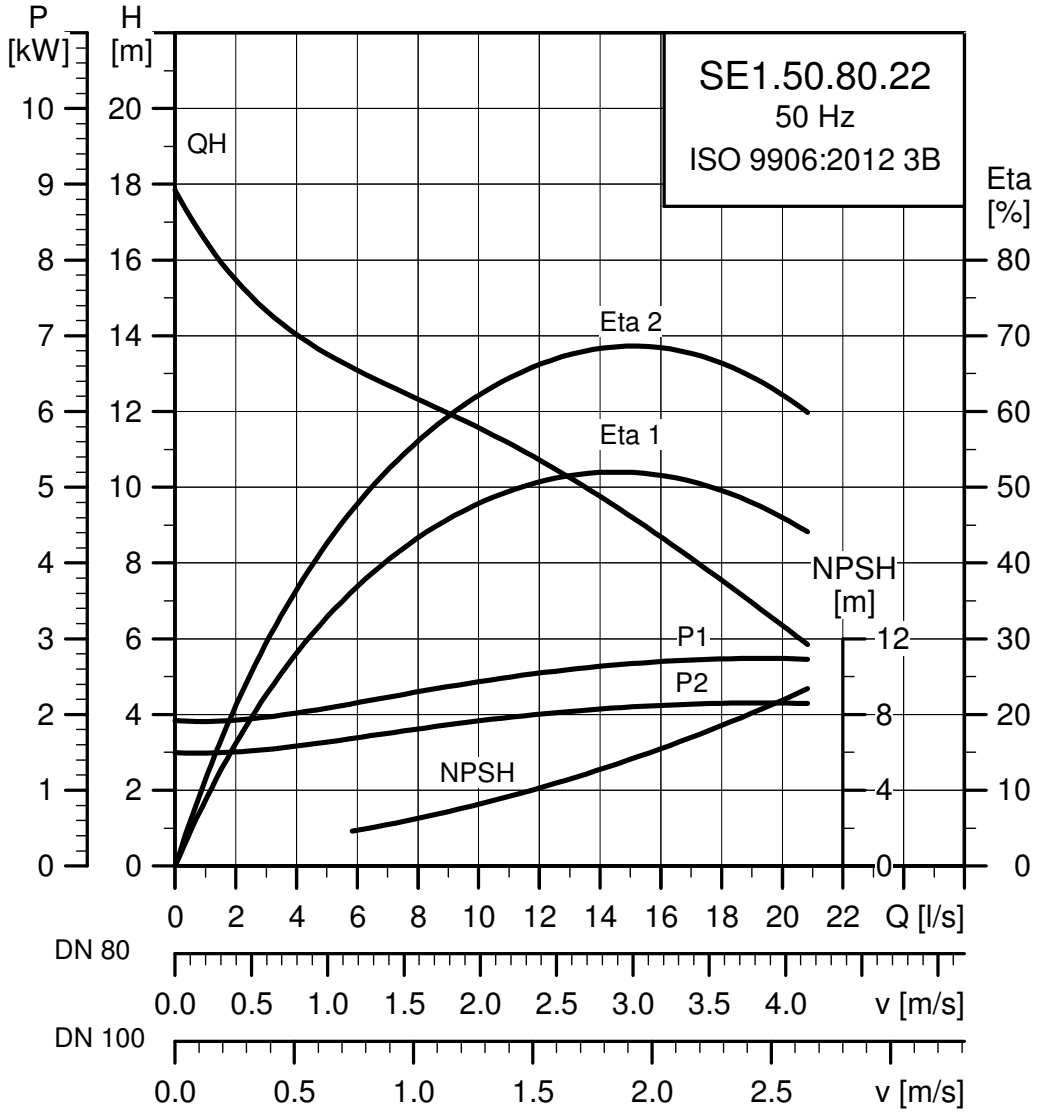

Electrical data

Voltage	P1	P2	Number of poles	Rpm	Starting method	I_N*	I_{start}	η_{motor} [%]			Cos φ			Moment of inertia	Breakdown torque $M_{max.}$
[V]	[kW]	[kW]				[A]	[A]	1/2	3/4	1/1	1/2	3/4	1/1	[kgm²]	[Nm]
3 x 380-415	2.8	2.2	2	2895	DOL	8.9 - 8.7	37	73.5	76.6	77	0.72	0.81	0.86	0.0102	23

* Low voltage - high voltage.

Pump data

Impeller type	Max. solids size	Max. number of starts per hour	Max. installation depth	Enclosure class	Insulation class	Max. liquid temperature	pH
	[mm]		[m]			[°C]	
S-tube®	50	20	20	IP68	F	40	4-14

SE1.50.80.30.(Ex).2

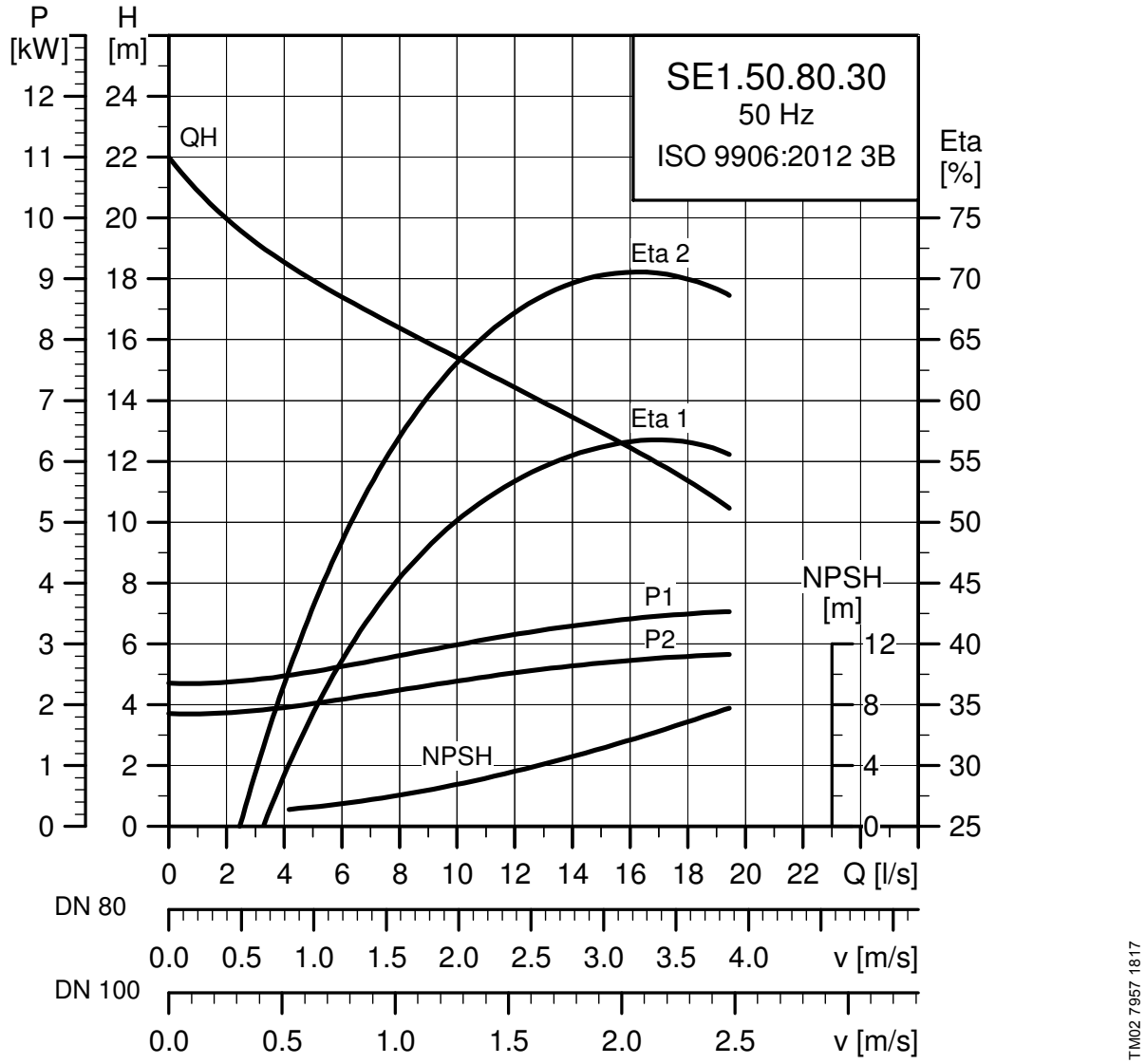

Electrical data

Voltage	P1	P2	Number of poles	Rpm	Starting method	I_N*	I_{start}	η_{motor} [%]			Cos φ			Moment of inertia	Breakdown torque $M_{max.}$
[V]	[kW]	[kW]				[A]	[A]	1/2	3/4	1/1	1/2	3/4	1/1	[kgm²]	[Nm]
3 x 380-415	3.8	3.0	2	2910	DOL	11.8 - 11.2	51	75.1	78.5	79.6	0.74	0.83	0.87	0.0123	33

* Low voltage - high voltage.

Pump data

Impeller type	Max. solids size	Max. number of starts per hour	Max. installation depth	Enclosure class	Insulation class	Max. liquid temperature	pH
	[mm]		[m]			[°C]	
S-tube®	50	20	20	IP68	F	40	4-14

SE1.50.80.40.(Ex).2

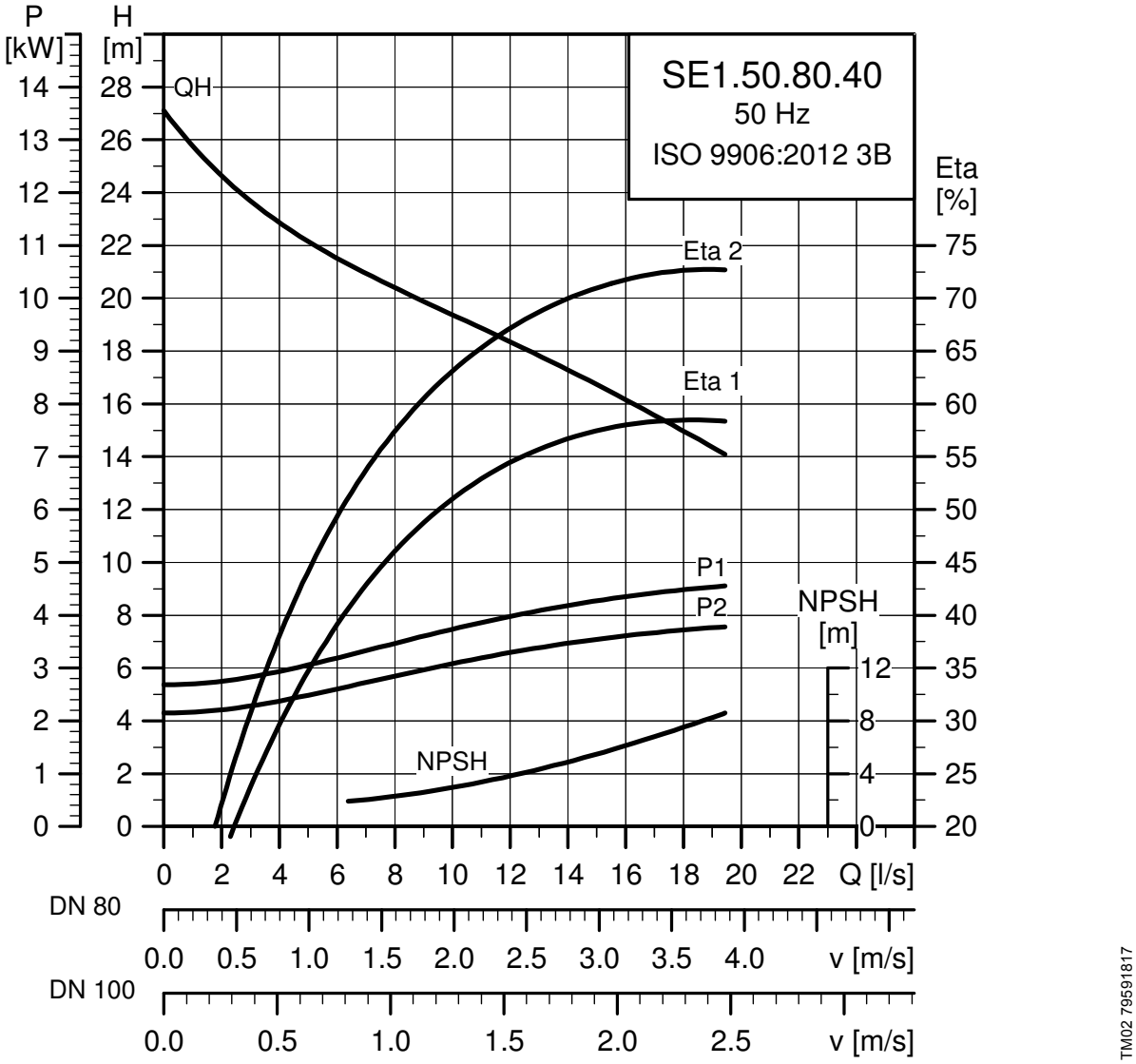

Electrical data

Voltage	P1	P2	Number of poles	Rpm	Starting method	I_N*	I_{start}	η_{motor} [%]			Cos φ			Moment of inertia	Breakdown torque $M_{max.}$
[V]	[kW]	[kW]				[A]	[A]	1/2	3/4	1/1	1/2	3/4	1/1	[kgm²]	[Nm]
3 x 380-415	4.8	4.0	2	2925	Y/D	8.7 - 8.5	71	79.2	82.4	83.3	0.68	0.78	0.84	0.0194	54

* Low voltage - high voltage.

Pump data

Impeller type	Max. solids size	Max. number of starts per hour	Max. installation depth	Enclosure class	Insulation class	Max. liquid temperature	pH
	[mm]		[m]			[°C]	
S-tube®	50	20	20	IP68	F	40	4-14

SE1.80.80.15.(Ex).4

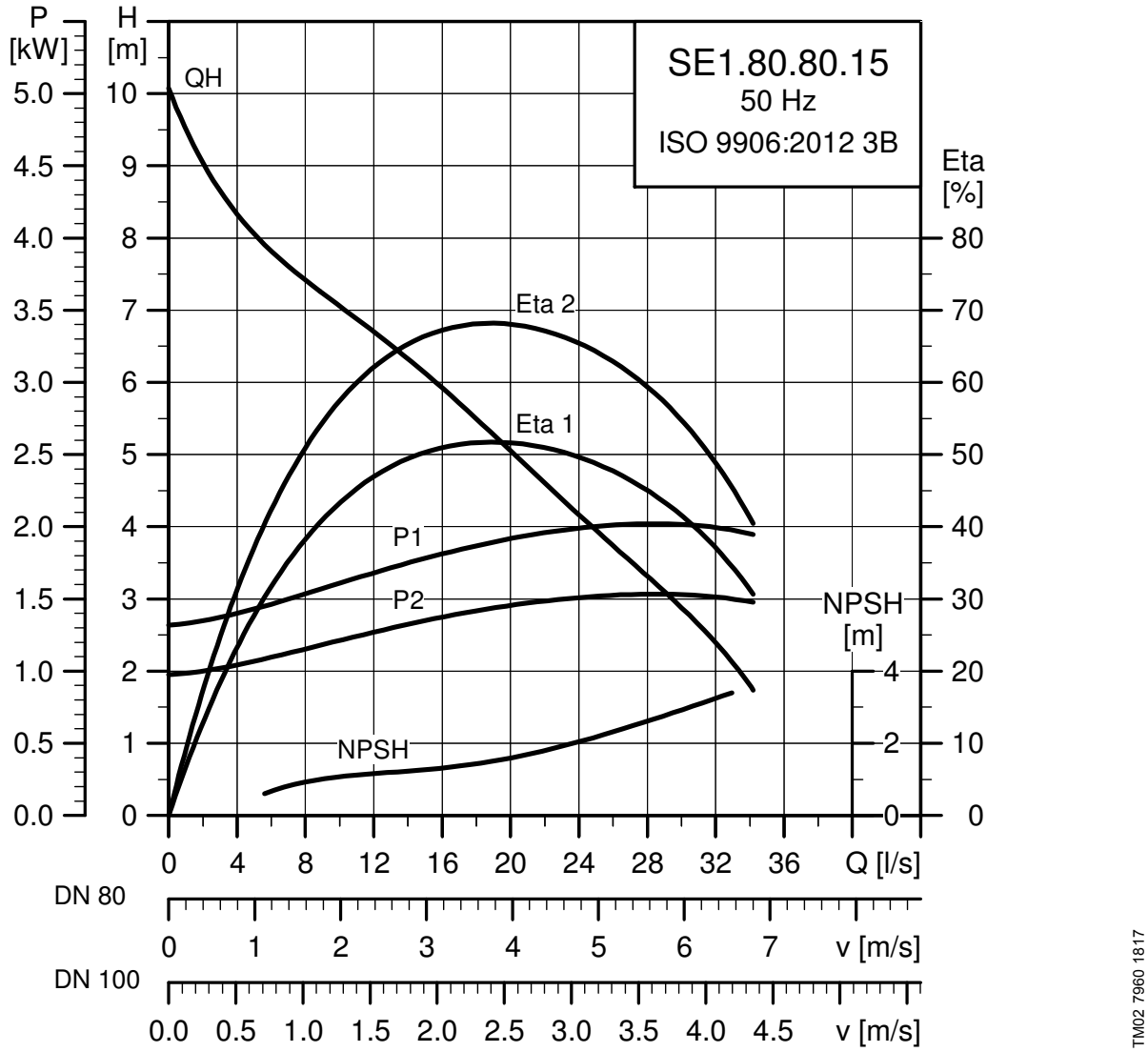

Electrical data

Voltage	P1	P2	Number of poles	Rpm	Starting method	I_N*	I_{start}	η_{motor} [%]			Cos φ			Moment of inertia	Breakdown torque $M_{max.}$
[V]	[kW]	[kW]				[A]	[A]	1/2	3/4	1/1	1/2	3/4	1/1	[kgm²]	[Nm]
3 x 380-415	2.1	1.5	4	1435	DOL	7.3 - 7.3	22	67	71	72	0.56	0.68	0.76	0.0492	28

* Low voltage - high voltage.

Pump data

Impeller type	Max. solids size	Max. number of starts per hour	Max. installation depth	Enclosure class	Insulation class	Max. liquid temperature	pH
	[mm]		[m]			[°C]	
S-tube®	80	20	20	IP68	F	40	4-14

SE1.80.80.22.(Ex).4

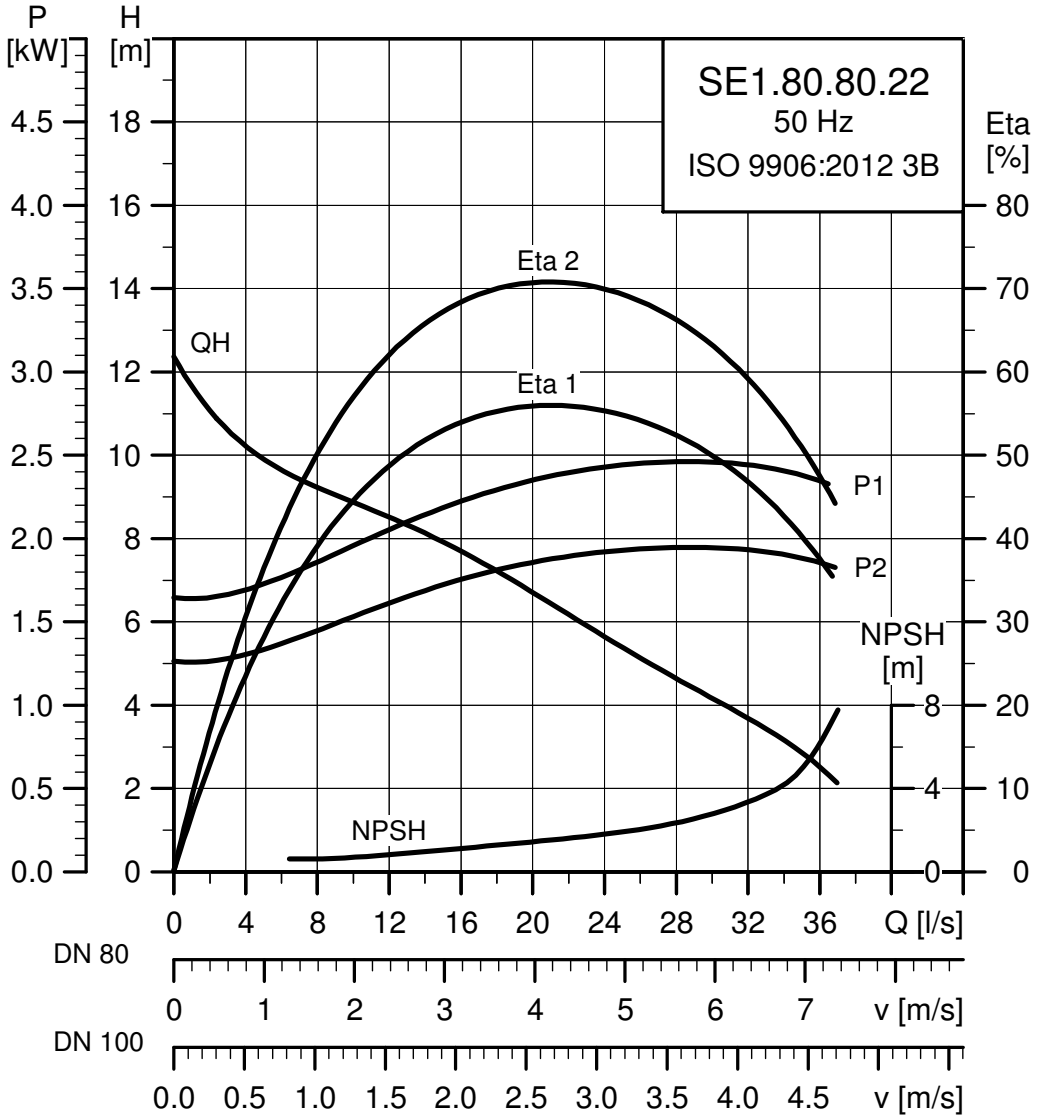

Electrical data

Voltage	P1	P2	Number of poles	Rpm	Starting method	I_N*	I_{start}	η_{motor} [%]			Cos φ			Moment of inertia	Breakdown torque $M_{max.}$
[V]	[kW]	[kW]				[A]	[A]	1/2	3/4	1/1	1/2	3/4	1/1	[kgm²]	[Nm]
3 x 380-415	2.9	2.2	4	1445	DOL	10.3 - 10.3	32	70.9	75.2	76.3	0.53	0.66	0.74	0.0570	45

* Low voltage - high voltage.

Pump data

Impeller type	Max. solids size	Max. number of starts per hour	Max. installation depth	Enclosure class	Insulation class	Max. liquid temperature	pH
	[mm]		[m]			[°C]	
S-tube®	80	20	20	IP68	F	40	4-14

SE1.80.80.30.(Ex).4

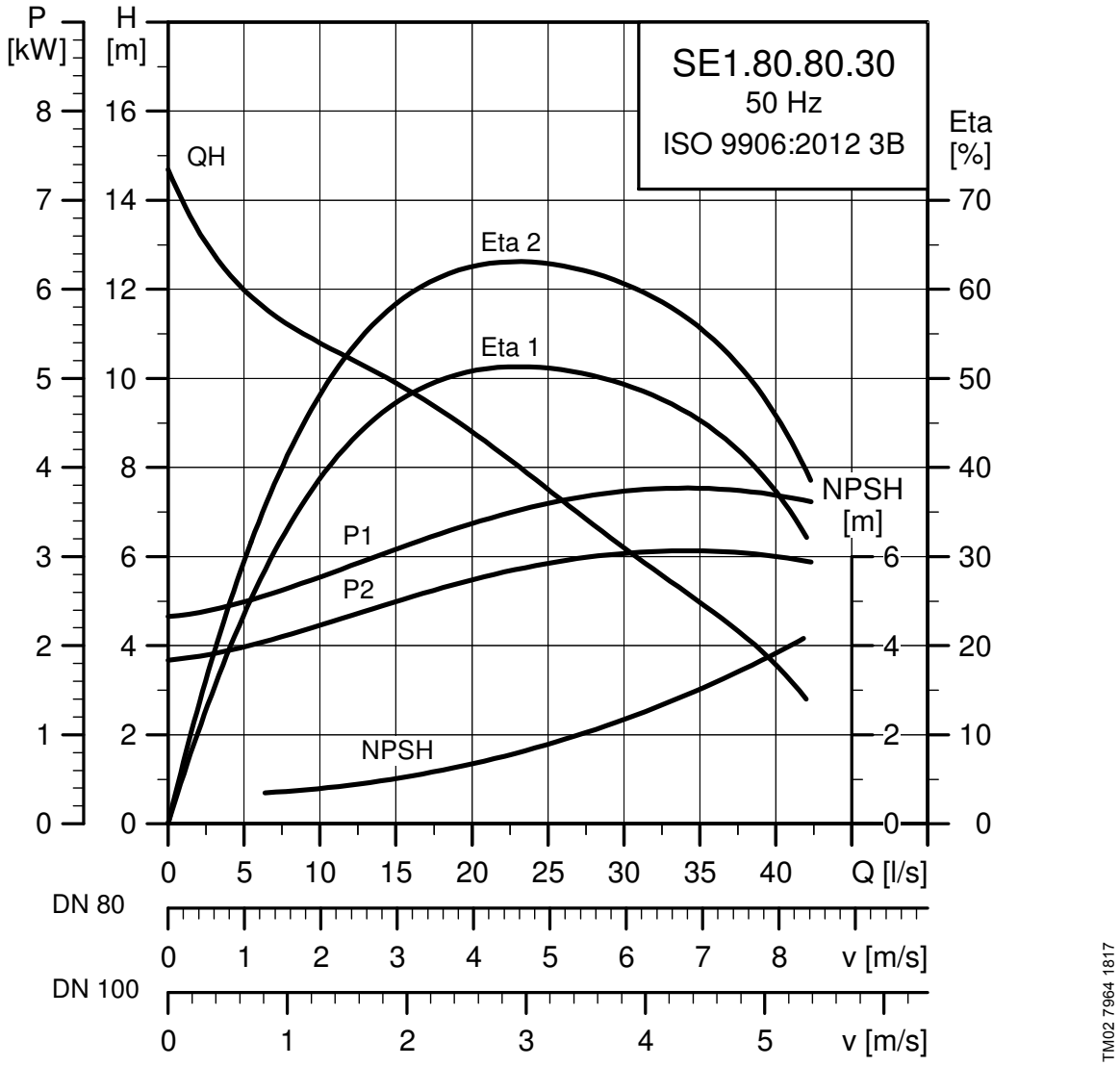

Electrical data

Voltage	P1	P2	Number of poles	Rpm	Starting method	I_N*	I_{start}	η_{motor} [%]			Cos φ			Moment of inertia	Breakdown torque $M_{max.}$
[V]	[kW]	[kW]				[A]	[A]	1/2	3/4	1/1	1/2	3/4	1/1	[kgm²]	[Nm]
3 x 380-415	3.7	3.0	4	1455	DOL	13.4 - 13.8	43	76.4	79.9	81.2	0.5	0.64	0.73	0.0966	71

* Low voltage - high voltage.

Pump data

Impeller type	Max. solids size	Max. number of starts per hour	Max. installation depth	Enclosure class	Insulation class	Max. liquid temperature	pH
	[mm]		[m]			[°C]	
S-tube®	80	20	20	IP68	F	40	4-14

SE1.80.80.40.(Ex).4

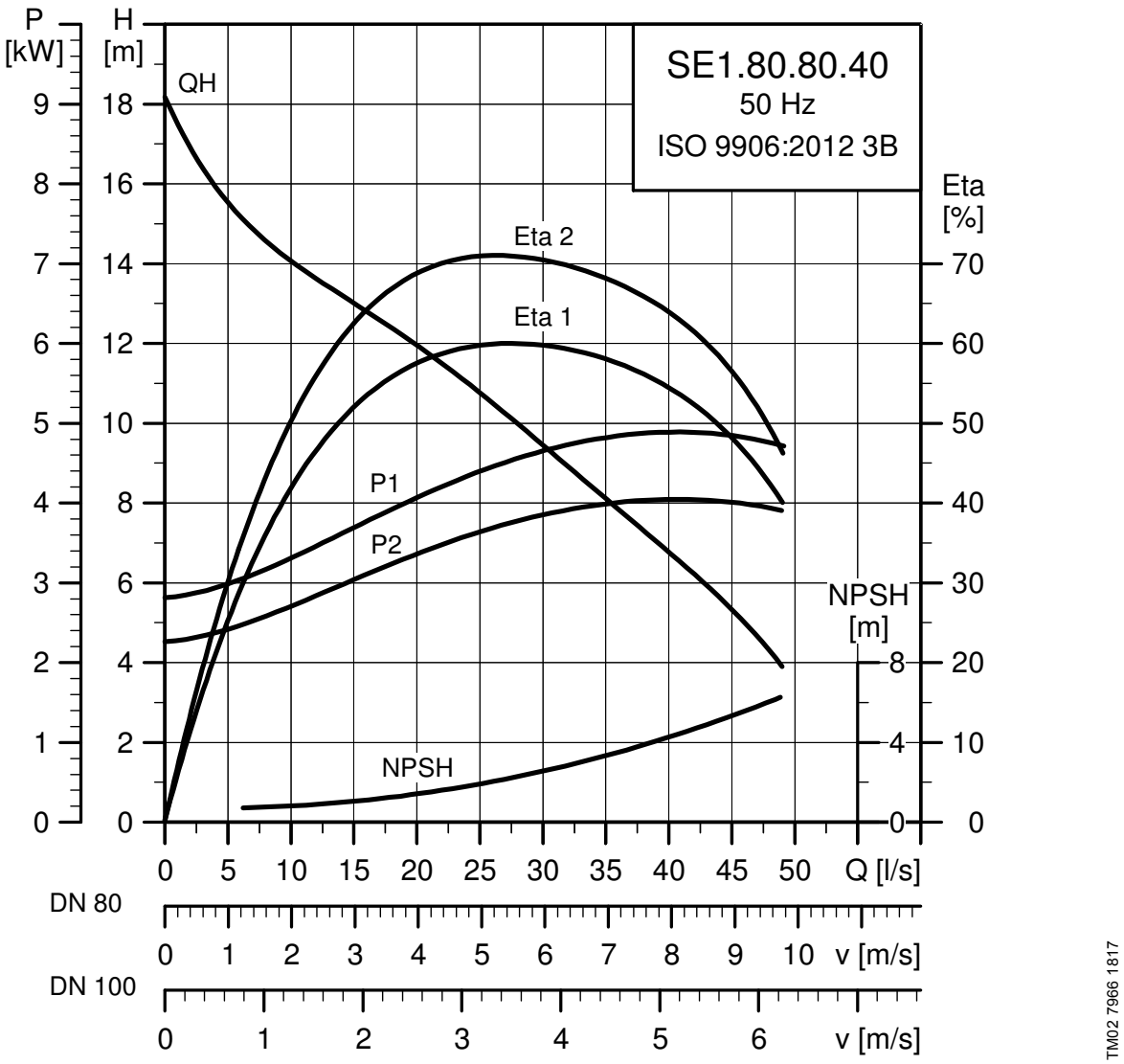

Electrical data

Voltage	P1	P2	Number of poles	Rpm	Starting method	I_N*	I_{start}	η_{motor} [%]			Cos φ			Moment of inertia	Breakdown torque $M_{max.}$
[V]	[kW]	[kW]				[A]	[A]	1/2	3/4	1/1	1/2	3/4	1/1	[kgm²]	[Nm]
3 x 380-415	4.9	4.0	4	1460	Y/D	10.0 - 10.2	67	78.2	81.7	82.2	0.52	0.65	0.73	0.1141	100

* Low voltage - high voltage.

Pump data

Impeller type	Max. solids size	Max. number of starts per hour	Max. installation depth	Enclosure class	Insulation class	Max. liquid temperature	pH
	[mm]		[m]			[°C]	
S-tube®	80	20	20	IP68	F	40	4-14

SE1.80.80.55.(Ex).4

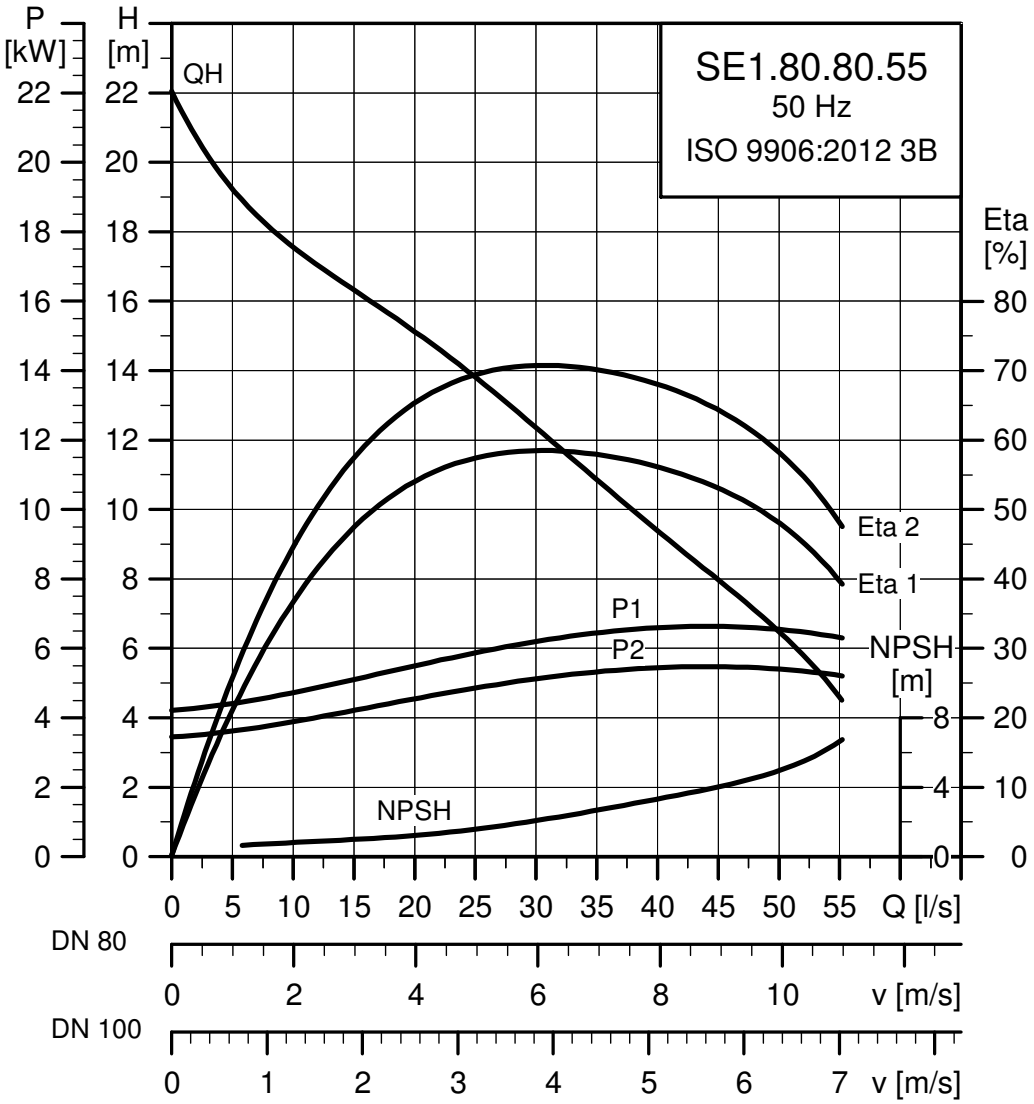

TM02 7968 1817

Electrical data

Voltage	P1	P2	Number of poles	Rpm	Starting method	I_N*	I_{start}	η_{motor} [%]			Cos φ			Moment of inertia	Breakdown torque $M_{max.}$
[V]	[kW]	[kW]				[A]	[A]	1/2	3/4	1/1	1/2	3/4	1/1	[kgm²]	[Nm]
3 x 380-415	6.5	5.5	4	1455	Y/D	13.3 - 13.8	87	81	83.3	83.9	0.52	0.65	0.74	0.1295	122

* Low voltage - high voltage.

Pump data

Impeller type	Max. solids size	Max. number of starts per hour	Max. installation depth	Enclosure class	Insulation class	Max. liquid temperature	pH
	[mm]		[m]			[°C]	
S-tube®	80	20	20	IP68	F	40	4-14

SE1.80.80.75.(Ex).4

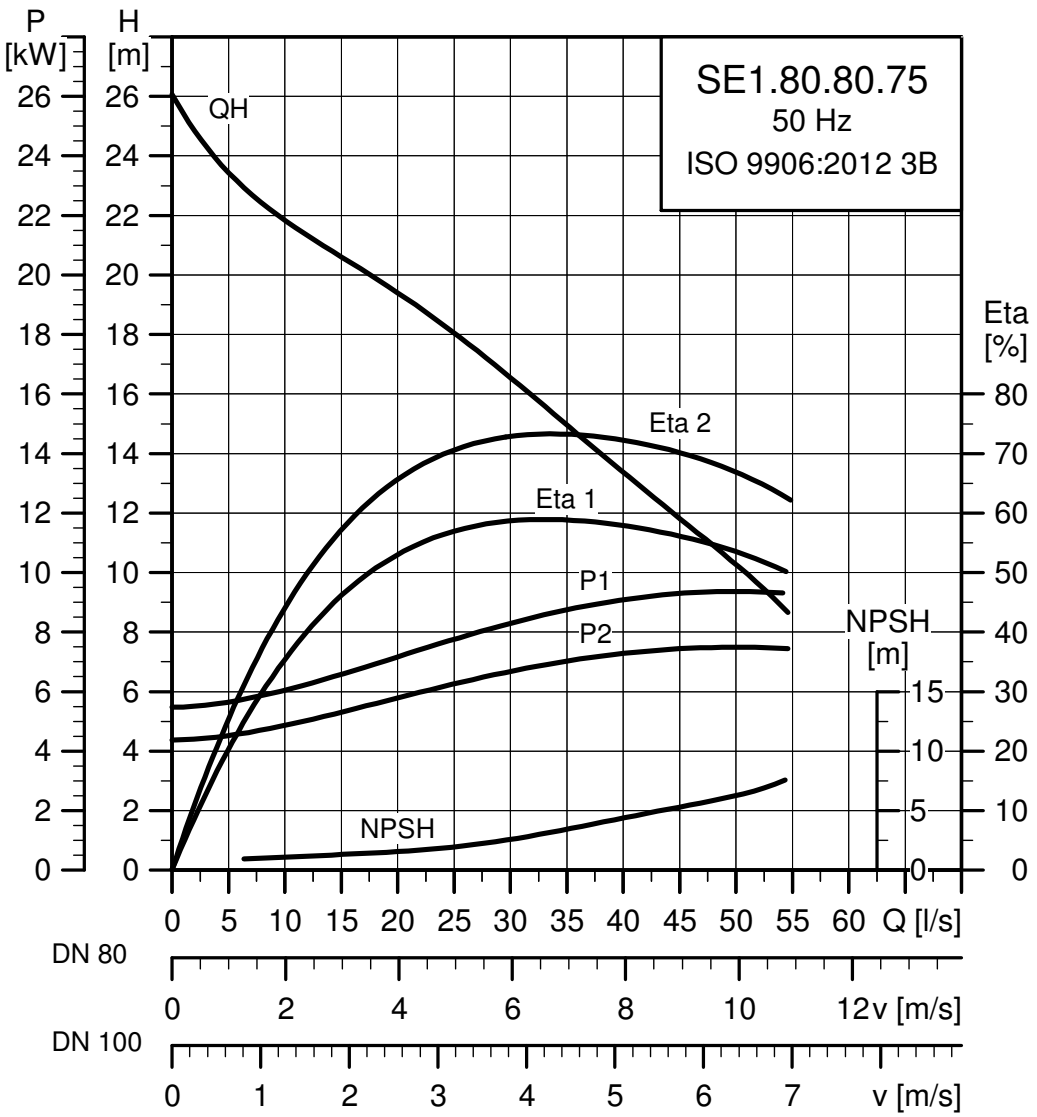

Electrical data

Voltage	P1	P2	Number of poles	Rpm	Starting method	I_N*	I_{start}	η_{motor} [%]			Cos φ			Moment of inertia	Breakdown torque $M_{max.}$
[V]	[kW]	[kW]				[A]	[A]	1/2	3/4	1/1	1/2	3/4	1/1	[kgm²]	[Nm]
3 x 380-415	9.0	7.5	4	1455	Y/D	17.7 - 17.5	107	81.3	83.5	83.4	0.61	0.72	0.79	0.1618	141

* Low voltage - high voltage.

Pump data

Impeller type	Max. solids size [mm]	Max. number of starts per hour	Max. installation depth [m]	Enclosure class	Insulation class	Max. liquid temperature [°C]	pH
S-tube®	80	20	20	IP68	F	40	4-14

SE1.80.100.15.(Ex).4

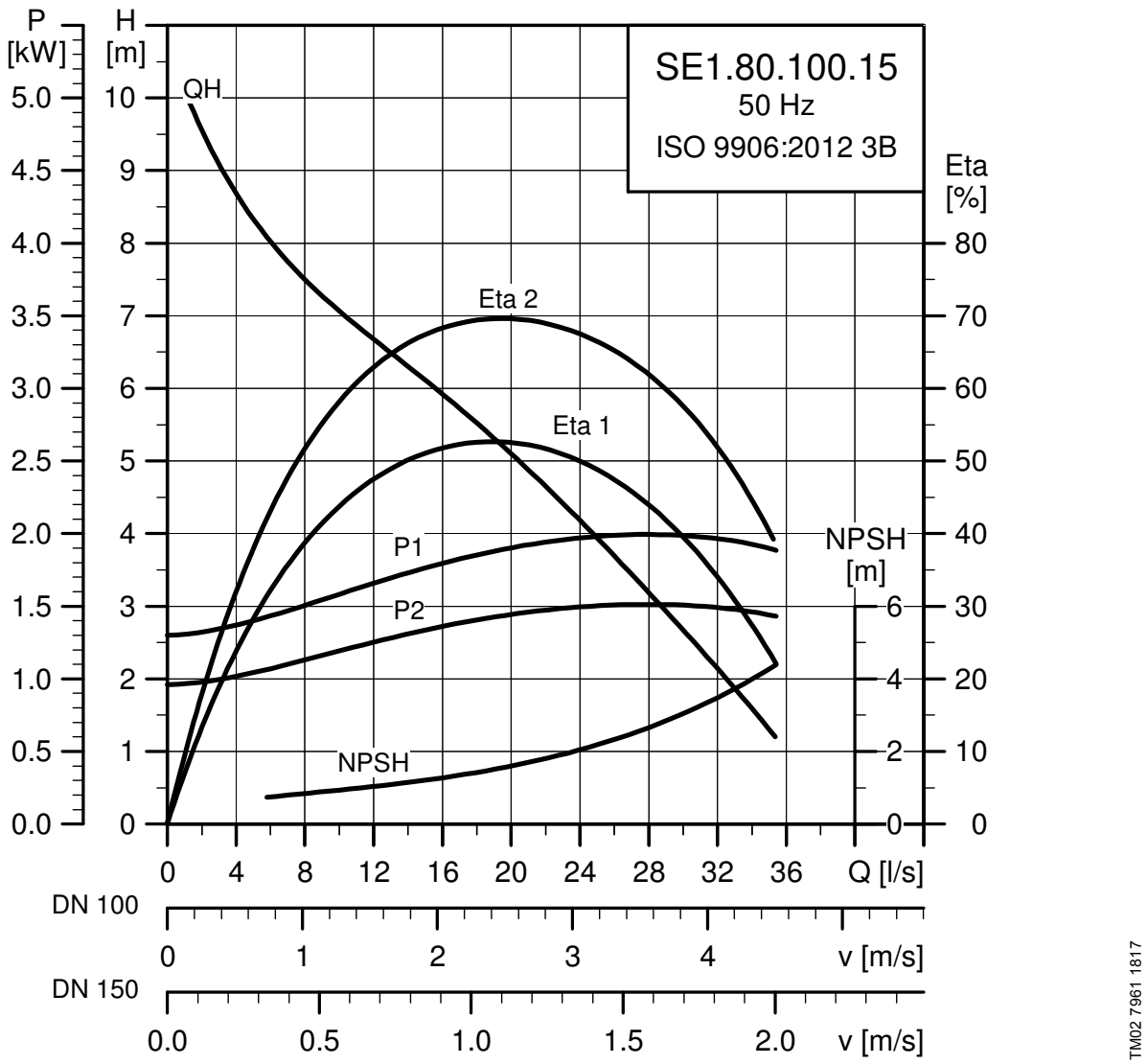

Electrical data

Voltage	P1	P2	Number of poles	Rpm	Starting method	I_N*	I_{start}	η_{motor} [%]			Cos φ			Moment of inertia	Breakdown torque $M_{max.}$
[V]	[kW]	[kW]				[A]	[A]	1/2	3/4	1/1	1/2	3/4	1/1	[kgm²]	[Nm]
3 x 380-415	2.1	1.5	4	1435	DOL	7.3 - 7.3	22	67	71	72	0.56	0.68	0.76	0.0492	28

* Low voltage - high voltage.

Pump data

Impeller type	Max. solids size	Max. number of starts per hour	Max. installation depth	Enclosure class	Insulation class	Max. liquid temperature	pH
	[mm]		[m]			[°C]	
S-tube®	80	20	20	IP68	F	40	4-14

SE1.80.100.22.(Ex).4

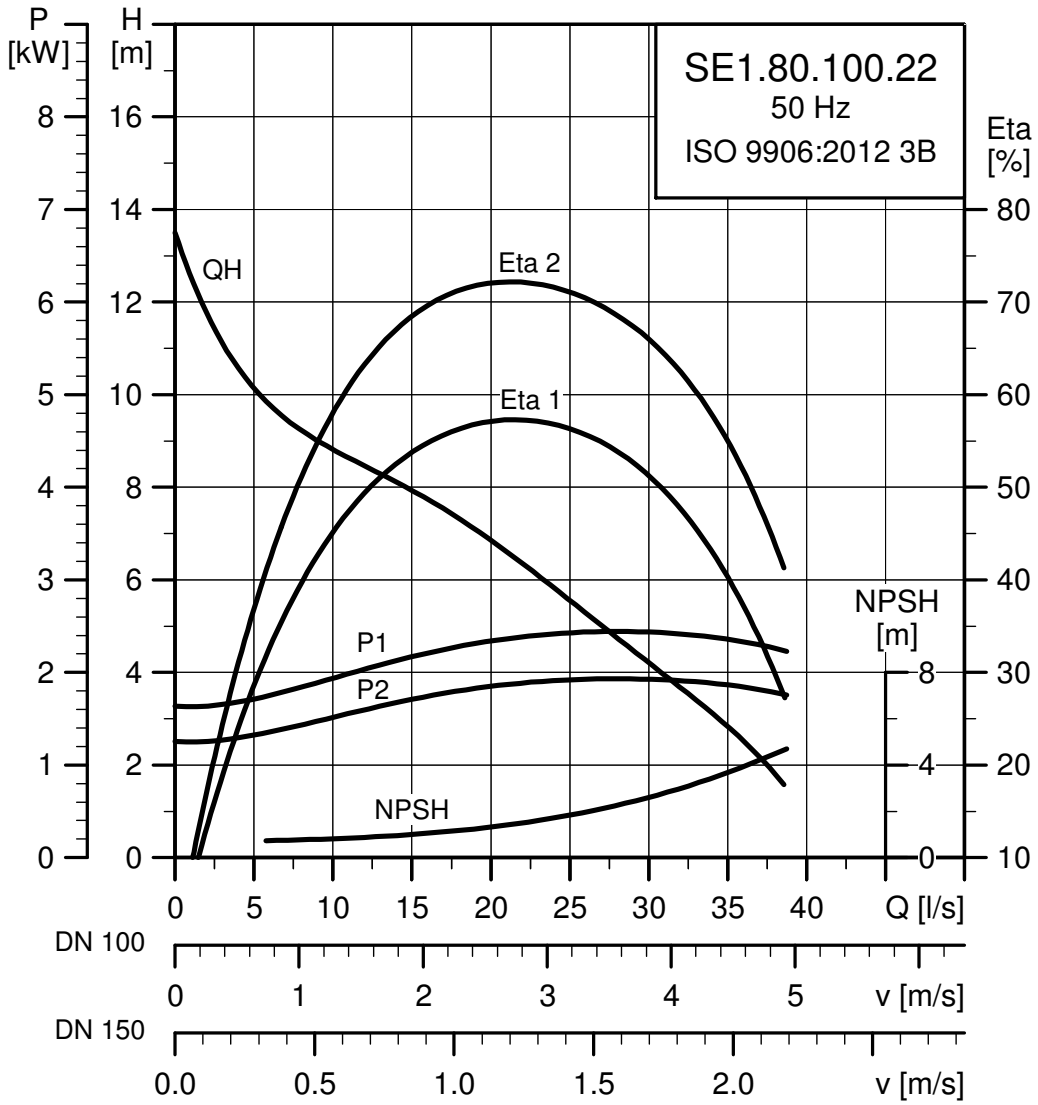

Electrical data

Voltage	P1	P2	Number of poles	Rpm	Starting method	I_N*	I_{start}	η_{motor} [%]			Cos φ			Moment of inertia	Breakdown torque $M_{max.}$
[V]	[kW]	[kW]				[A]	[A]	1/2	3/4	1/1	1/2	3/4	1/1	[kgm²]	[Nm]
3 x 380-415	2.9	2.2	4	1445	DOL	10.3 - 10.3	32	70.9	75.2	76.3	0.53	0.66	0.74	0.0570	45

* Low voltage - high voltage.

Pump data

Impeller type	Max. solids size	Max. number of starts per hour	Max. installation depth	Enclosure class	Insulation class	Max. liquid temperature	pH
	[mm]		[m]			[°C]	
S-tube®	80	20	20	IP68	F	40	4-14

SE1.80.100.30.(Ex).4

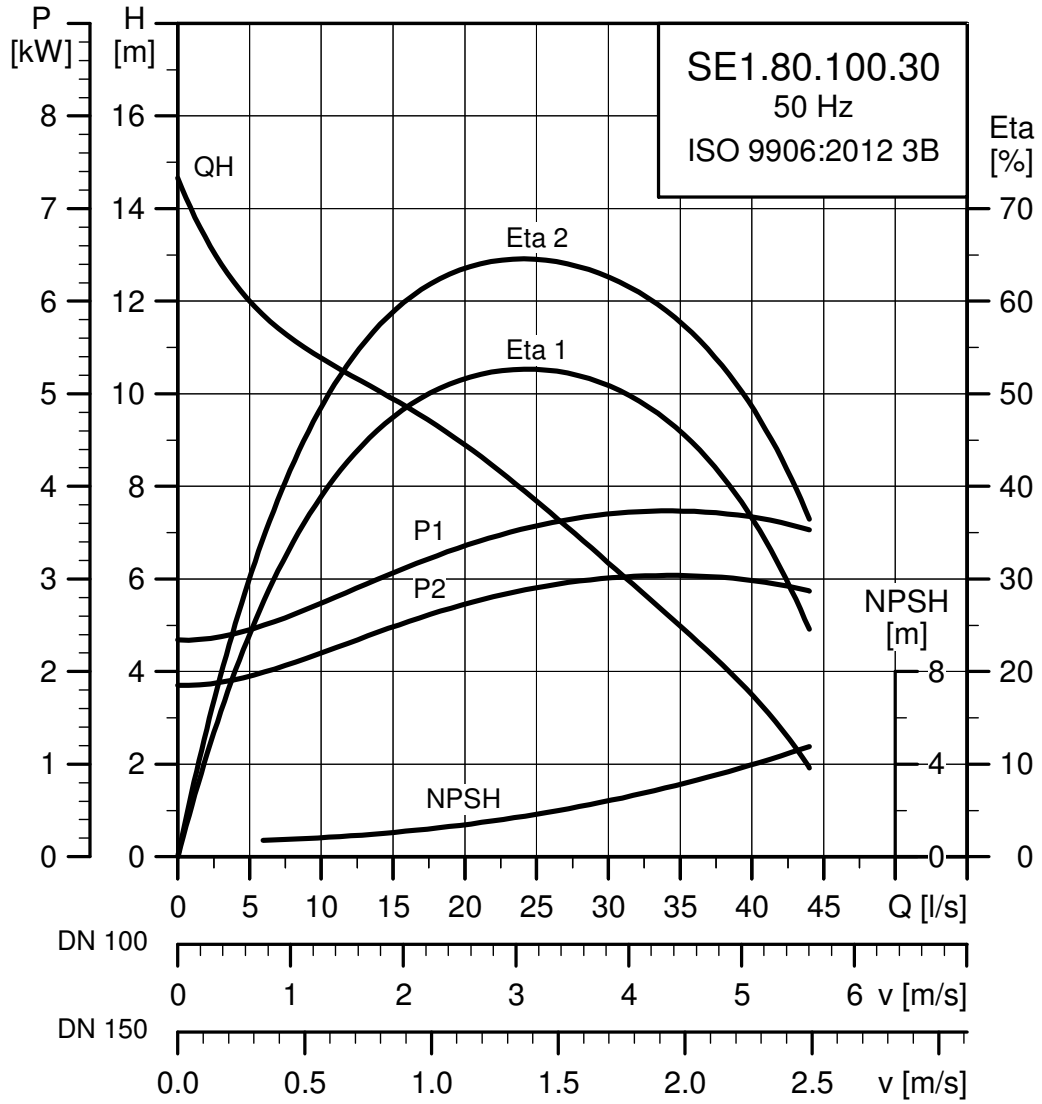

TM02 7965 1817

Electrical data

Voltage [V]	P1 [kW]	P2 [kW]	Number of poles	Rpm	Starting method	I_N* [A]	I_{start} [A]	η_{motor} [%] 1/2	3/4	1/1	Cos φ 1/2	3/4	1/1	Moment of inertia [kgm²]	Breakdown torque $M_{max.}$ [Nm]
3 x 380-415	3.7	3.0	4	1455	DOL	13.4 - 13.8	43	76.4	79.9	81.2	0.5	0.64	0.73	0.0966	71

* Low voltage - high voltage.

Pump data

Impeller type	Max. solids size [mm]	Max. number of starts per hour	Max. installation depth [m]	Enclosure class	Insulation class	Max. liquid temperature [°C]	pH
S-tube®	80	20	20	IP68	F	40	4-14

SE1.80.100.40.(Ex).4

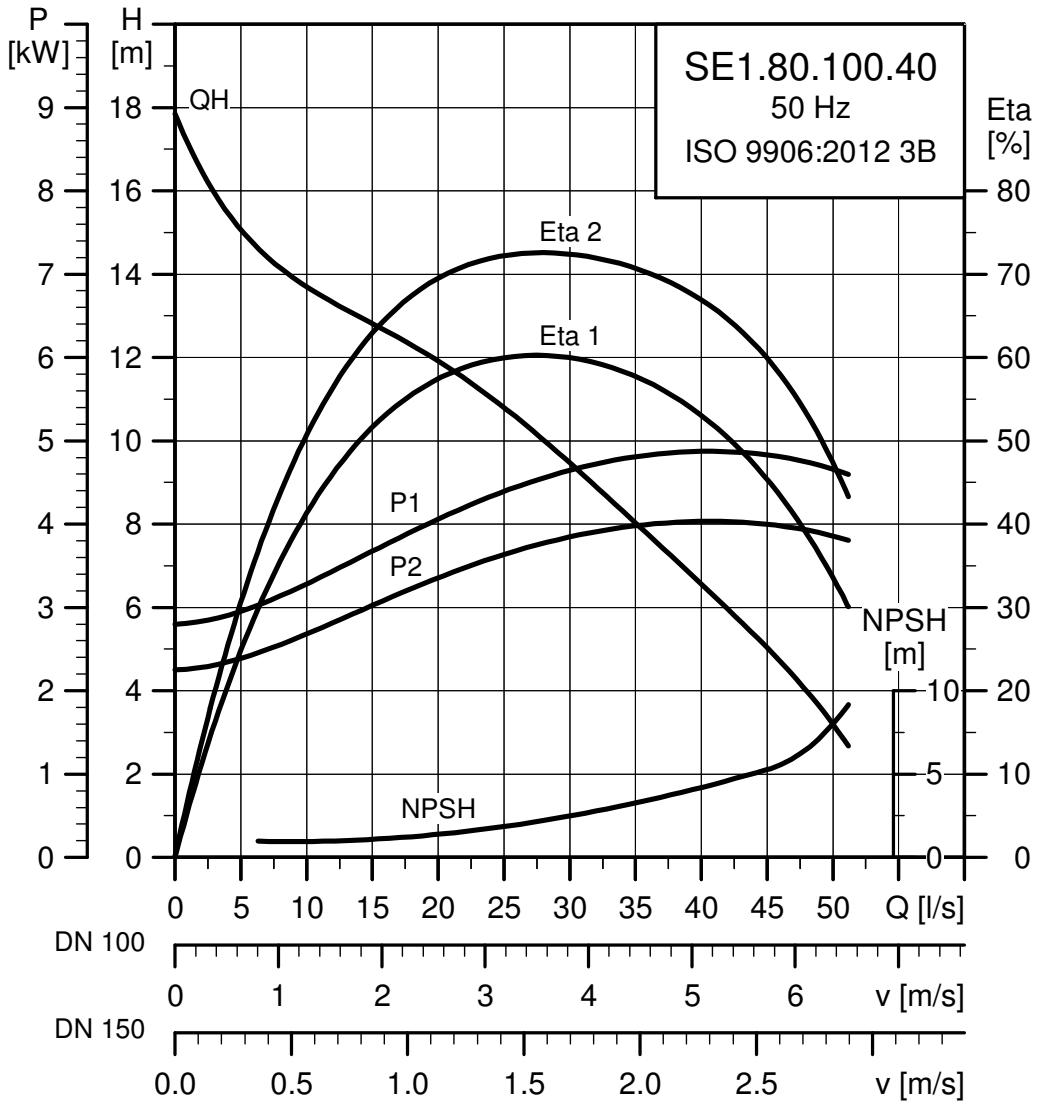

TM02 7967 1817

Electrical data

Voltage	P1	P2	Number of poles	Rpm	Starting method	I_N*	I_{start}	η_{motor} [%]			Cos φ			Moment of inertia	Breakdown torque $M_{max.}$
[V]	[kW]	[kW]				[A]	[A]	1/2	3/4	1/1	1/2	3/4	1/1	[kgm²]	[Nm]
3 x 380-415	4.9	4.0	4	1460	Y/D	10.0 - 10.2	67	78.2	81.7	82.2	0.52	0.65	0.73	0.1141	100

* Low voltage - high voltage.

Pump data

Impeller type	Max. solids size	Max. number of starts per hour	Max. installation depth	Enclosure class	Insulation class	Max. liquid temperature	pH
	[mm]		[m]			[°C]	
S-tube®	80	20	20	IP68	F	40	4-14

SE1.80.100.55.(Ex).4

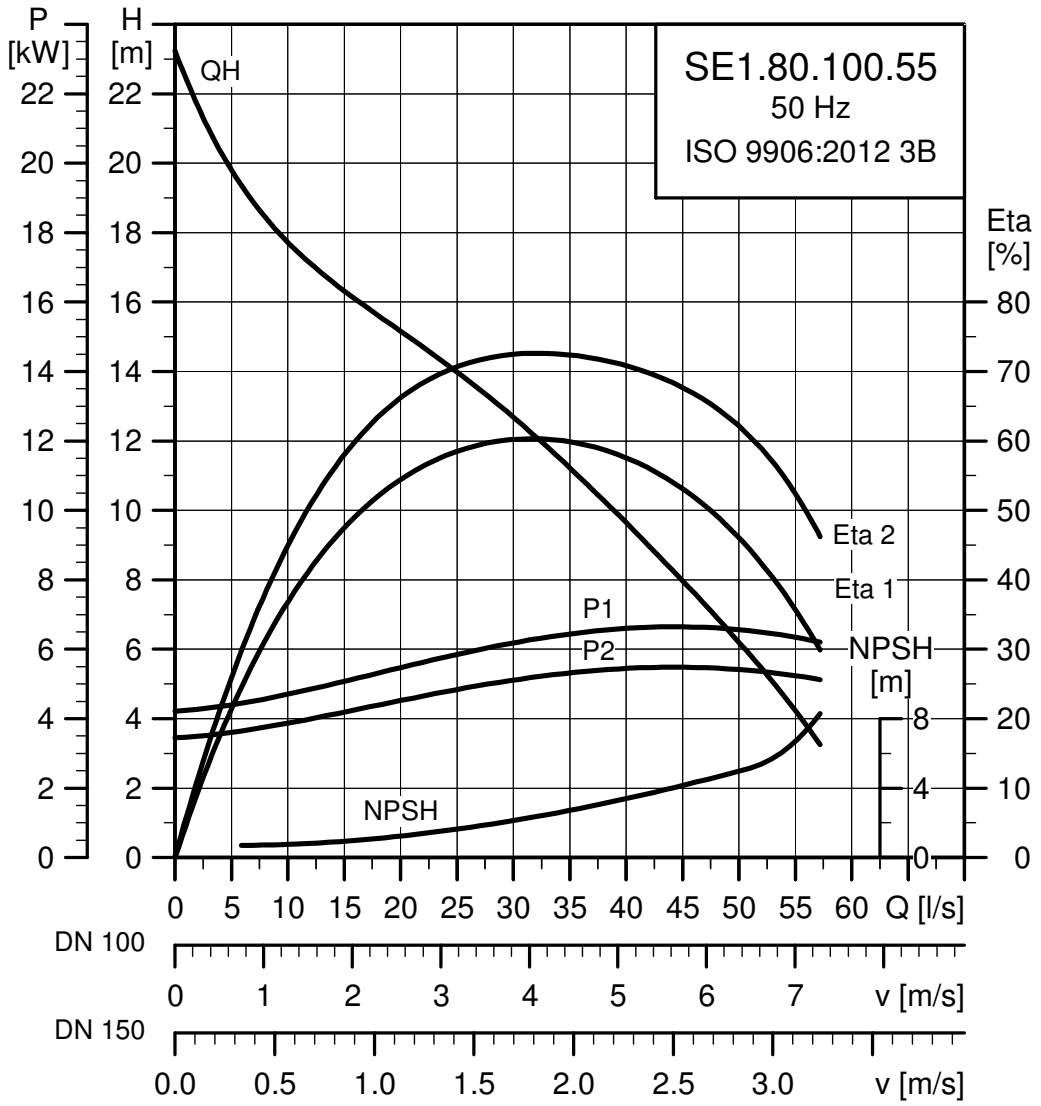

Electrical data

Voltage	P1	P2	Number of poles	Rpm	Starting method	I_N*	I_{start}	η_{motor} [%]			Cos φ			Moment of inertia	Breakdown torque $M_{max.}$
[V]	[kW]	[kW]				[A]	[A]	1/2	3/4	1/1	1/2	3/4	1/1	[kgm²]	[Nm]
3 x 380-415	6.5	5.5	4	1455	Y/D	13.3 - 13.8	87	81	83.3	83.9	0.52	0.65	0.74	0.1295	122

* Low voltage - high voltage.

Pump data

Impeller type	Max. solids size	Max. number of starts per hour	Max. installation depth	Enclosure class	Insulation class	Max. liquid temperature	pH
	[mm]		[m]			[°C]	
S-tube®	80	20	20	IP68	F	40	4-14

SE1.80.100.75.(Ex).4

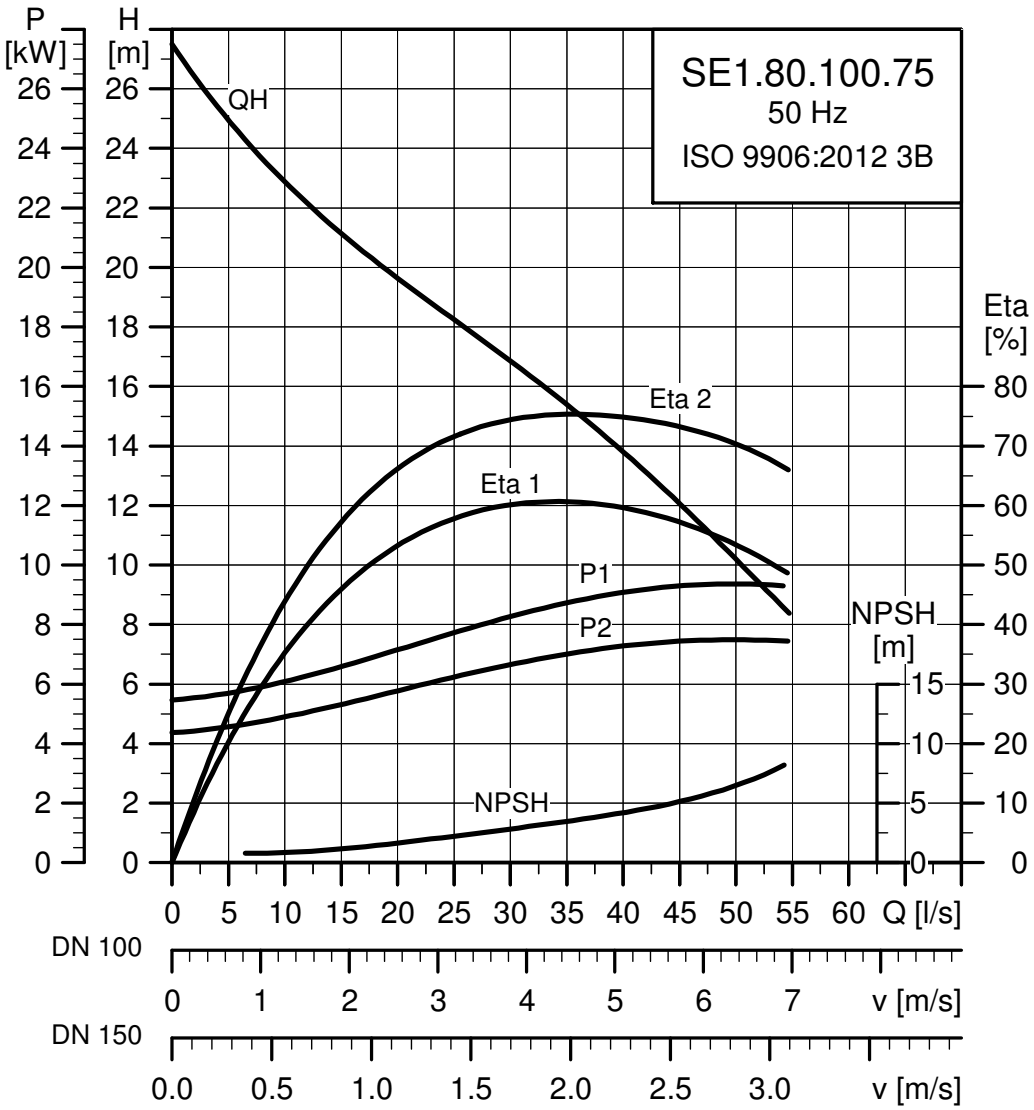

Electrical data

Voltage	P1	P2	Number of poles	Rpm	Starting method	I_N*	I_{start}	η_{motor} [%]			Cos φ			Moment of inertia	Breakdown torque $M_{max.}$
[V]	[kW]	[kW]				[A]	[A]	1/2	3/4	1/1	1/2	3/4	1/1	[kgm²]	[Nm]
3 x 380-415	9.0	7.5	4	1445	Y/D	17.7 - 17.5	107	81.3	83.5	83.4	0.61	0.72	0.79	0.1618	141

* Low voltage - high voltage.

Pump data

Impeller type	Max. solids size	Max. number of starts per hour	Max. installation depth	Enclosure class	Insulation class	Max. liquid temperature	pH
	[mm]		[m]			[°C]	
S-tube®	80	20	20	IP68	F	40	4-14

SE1.100.100.40.(Ex).4

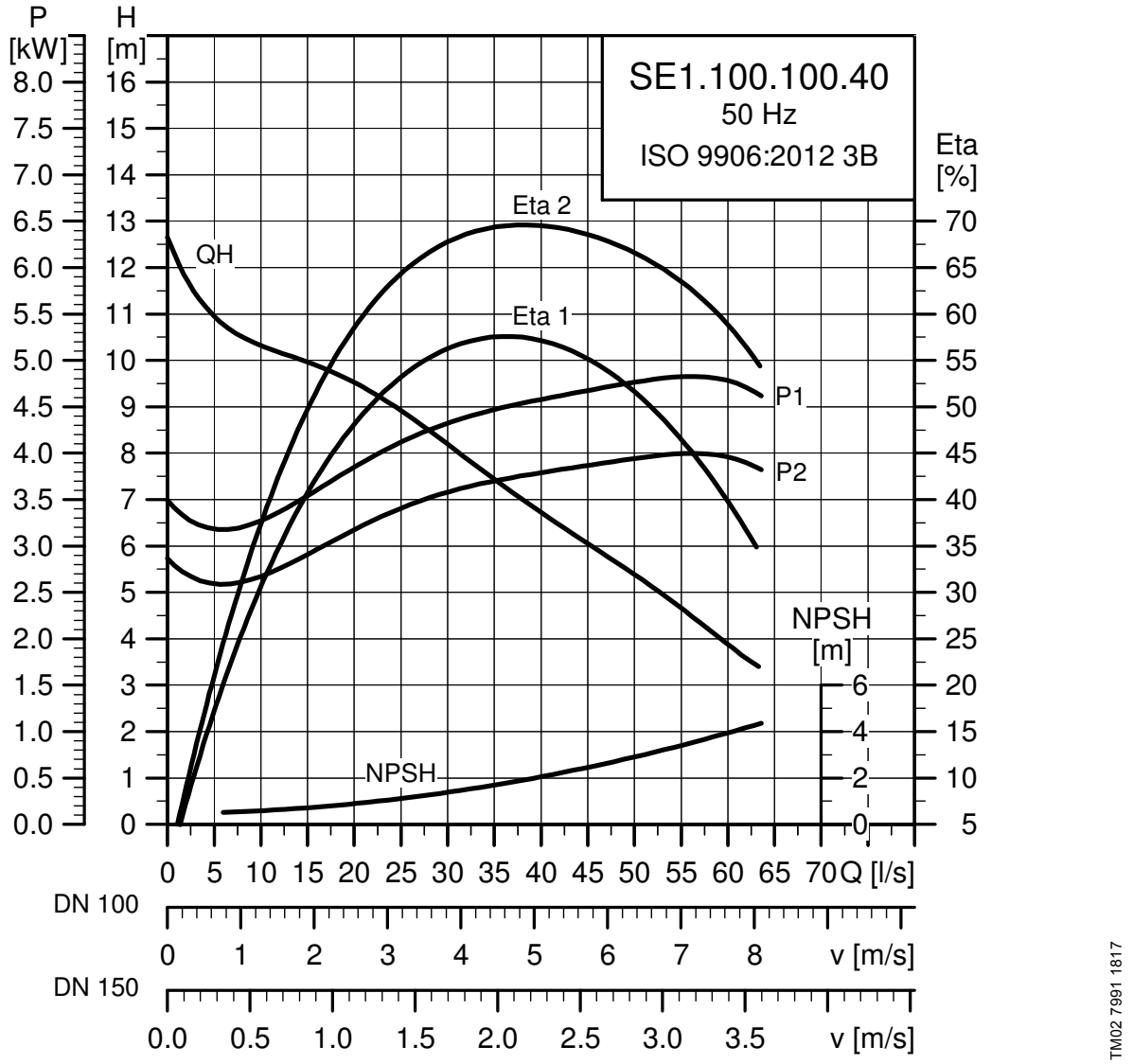

Electrical data

Voltage	P1	P2	Number of poles	Rpm	Starting method	I_N*	I_{start}	η_{motor} [%]			Cos φ			Moment of inertia	Breakdown torque $M_{max.}$
[V]	[kW]	[kW]				[A]	[A]	1/2	3/4	1/1	1/2	3/4	1/1	[kgm²]	[Nm]
3 x 380-415	4.9	4.0	4	1460	Y/D	10.0 - 10.2	67	78.2	81.7	82.2	0.52	0.65	0.73	0.1222	100

* Low voltage - high voltage.

Pump data

Impeller type	Max. solids size	Max. number of starts per hour	Max. installation depth	Enclosure class	Insulation class	Max. liquid temperature	pH
	[mm]		[m]			[°C]	
S-tube®	100	20	20	IP68	F	40	4-14

SE1.100.100.55.(Ex).4

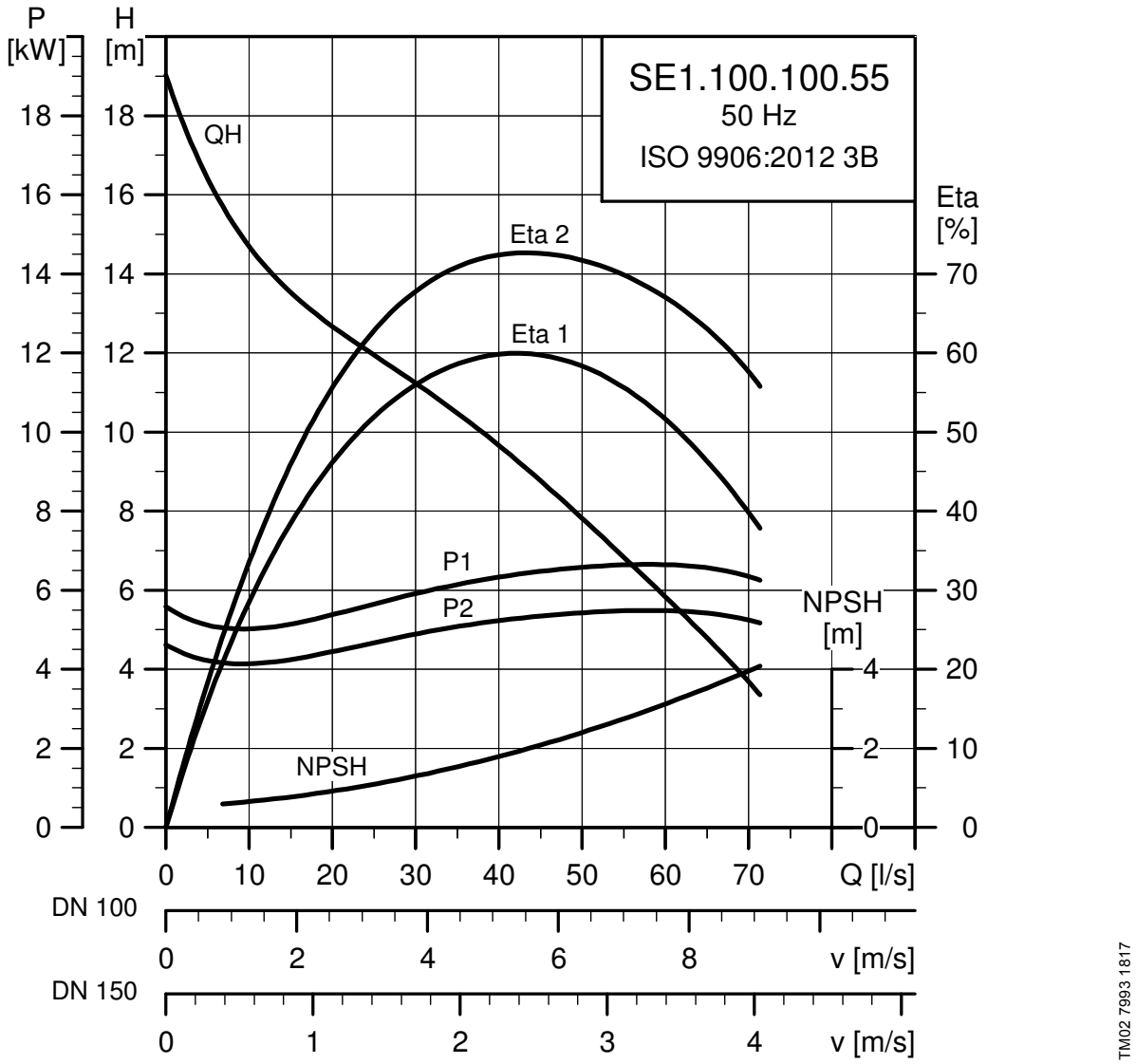

Electrical data

Voltage	P1	P2	Number of poles	Rpm	Starting method	I_N*	I_{start}	η_{motor} [%]			Cos φ			Moment of inertia	Breakdown torque $M_{max.}$
[V]	[kW]	[kW]				[A]	[A]	1/2	3/4	1/1	1/2	3/4	1/1	[kgm²]	[Nm]
3 x 380-415	6.5	5.5	4	1455	Y/D	13.3 - 13.8	87	81	83.3	83.9	0.52	0.65	0.74	0.1393	122

* Low voltage - high voltage.

Pump data

Impeller type	Max. solids size	Max. number of starts per hour	Max. installation depth	Enclosure class	Insulation class	Max. liquid temperature	pH
	[mm]		[m]			[°C]	
S-tube®	100	20	20	IP68	F	40	4-14

SE1.100.100.75.(Ex).4

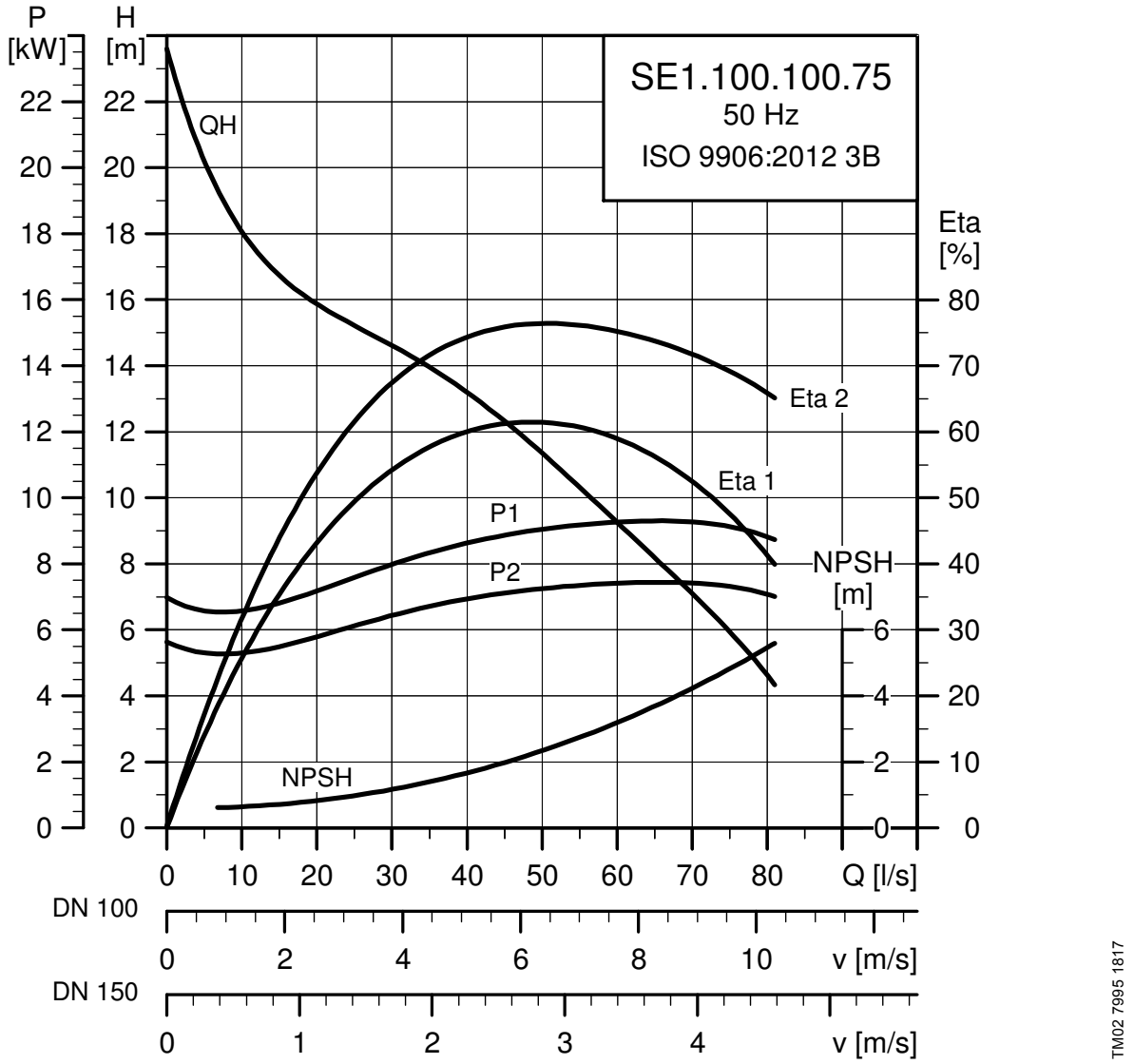

Electrical data

Voltage	P1	P2	Number of poles	Rpm	Starting method	I_N*	I_{start}	η_{motor} [%]			Cos φ			Moment of inertia	Breakdown torque $M_{max.}$
[V]	[kW]	[kW]				[A]	[A]	1/2	3/4	1/1	1/2	3/4	1/1	[kgm²]	[Nm]
3 x 380-415	9.0	7.5	4	1455	Y/D	17.7 - 17.5	107	81.3	83.5	83.4	0.61	0.72	0.79	0.1860	141

* Low voltage - high voltage.

Pump data

Impeller type	Max. solids size	Max. number of starts per hour	Max. installation depth	Enclosure class	Insulation class	Max. liquid temperature	pH
	[mm]		[m]			[°C]	
S-tube®	100	20	20	IP68	F	40	4-14

SE1.100.150.40.(Ex).4

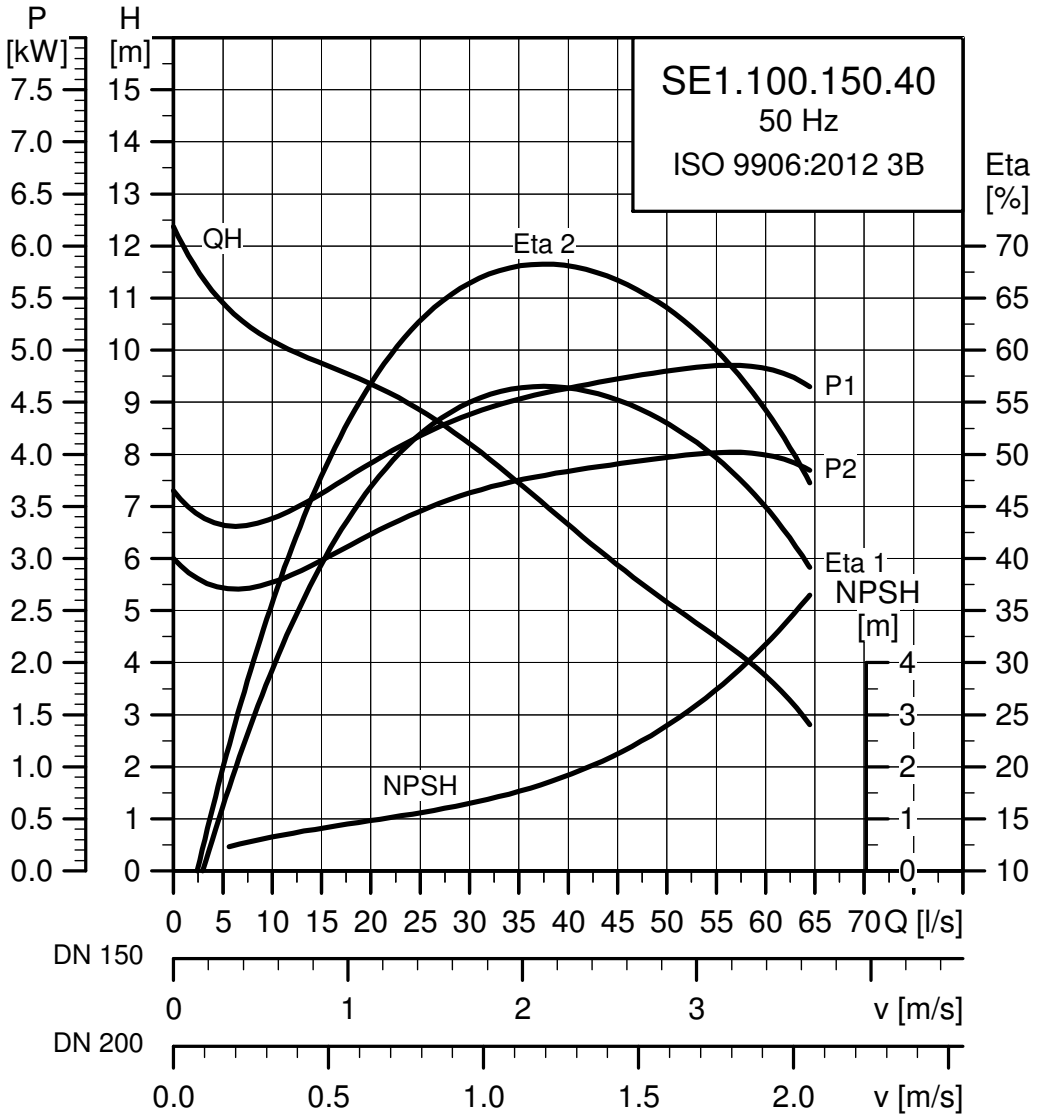

Electrical data

Voltage	P1	P2	Number of poles	Rpm	Starting method	I_N*	I_{start}	η_{motor} [%]			Cos φ			Moment of inertia	Breakdown torque $M_{max.}$
[V]	[kW]	[kW]				[A]	[A]	1/2	3/4	1/1	1/2	3/4	1/1	[kgm²]	[Nm]
3 x 380-415	4.9	4.0	4	1460	Y/D	10.0 - 10.2	67	78.2	81.7	82.2	0.52	0.65	0.73	0.1222	100

* Low voltage - high voltage.

Pump data

Impeller type	Max. solids size	Max. number of starts per hour	Max. installation depth	Enclosure class	Insulation class	Max. liquid temperature	pH
	[mm]		[m]			[°C]	
S-tube®	100	20	20	IP68	F	40	4-14

SE1.100.150.55.(Ex).4

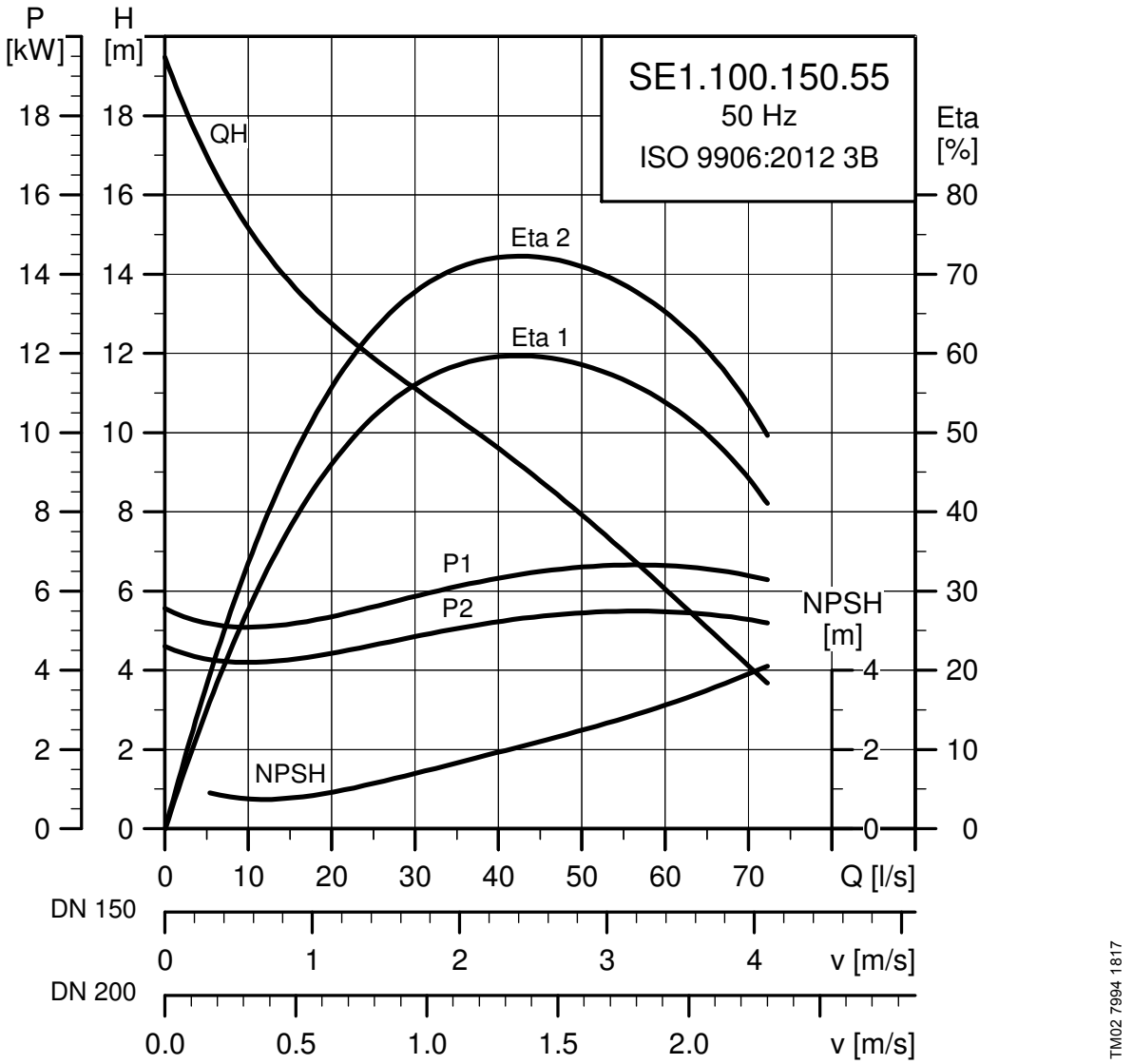

Electrical data

Voltage	P1	P2	Number of poles	Rpm	Starting method	I_N*	I_{start}	η_{motor} [%]			Cos φ			Moment of inertia	Breakdown torque $M_{max.}$
[V]	[kW]	[kW]				[A]	[A]	1/2	3/4	1/1	1/2	3/4	1/1	[kgm²]	[Nm]
3 x 380-415	6.5	5.5	4	1455	Y/D	13.3 - 13.8	87	81	83.3	83.9	0.52	0.65	0.74	0.1393	122

* Low voltage - high voltage.

Pump data

Impeller type	Max. solids size	Max. number of starts per hour	Max. installation depth	Enclosure class	Insulation class	Max. liquid temperature	pH
	[mm]		[m]			[°C]	
S-tube®	100	20	20	IP68	F	40	4-14

SE1.100.150.75.(Ex).4

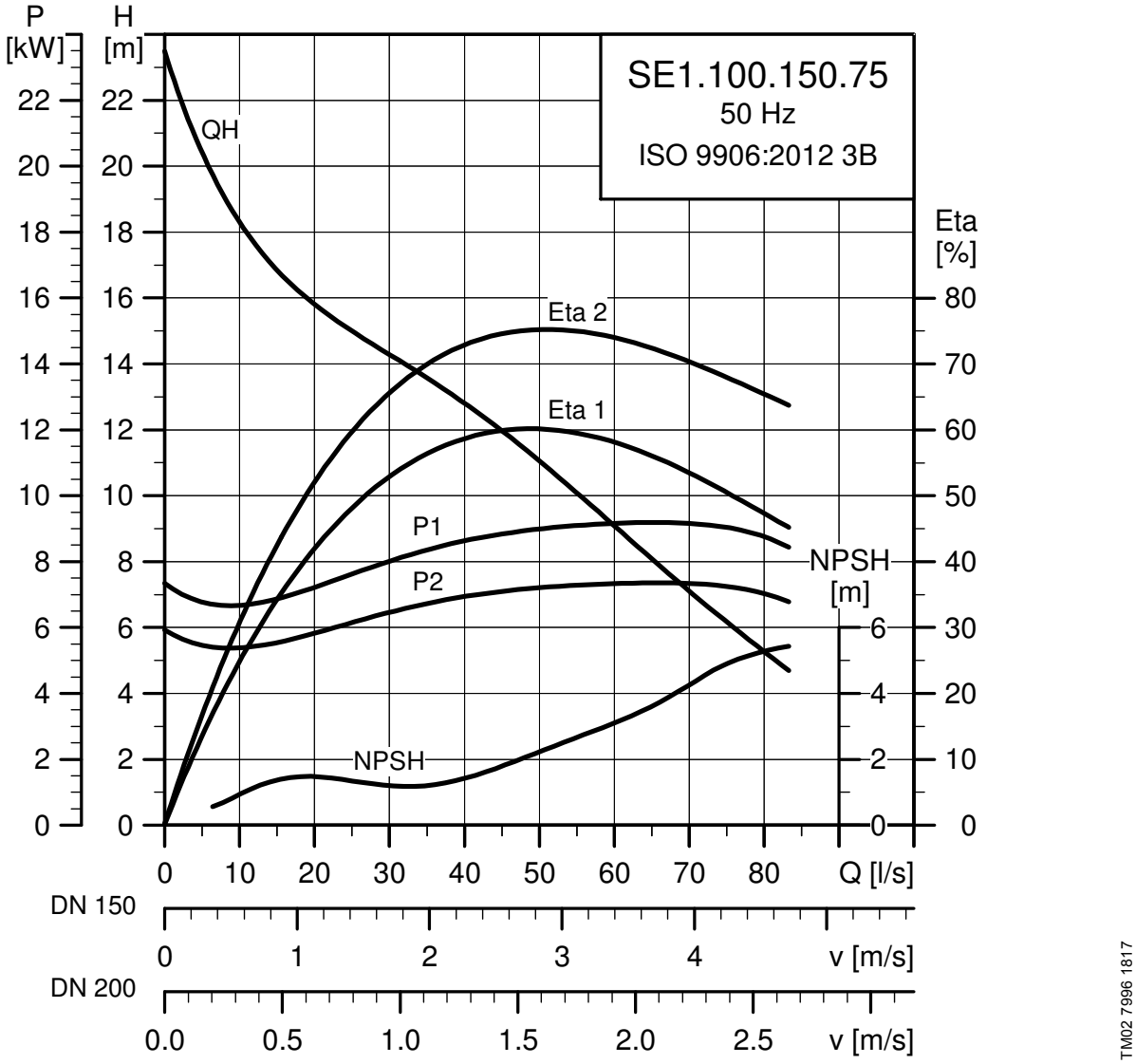

Electrical data

Voltage	P1	P2	Number of poles	Rpm	Starting method	I_N*	I_{start}	η_{motor} [%]			Cos φ			Moment of inertia	Breakdown torque $M_{max.}$
[V]	[kW]	[kW]				[A]	[A]	1/2	3/4	1/1	1/2	3/4	1/1	[kgm²]	[Nm]
3 x 380-415	9.0	7.5	4	1455	Y/D	17.7 - 17.5	107	81.3	83.5	83.4	0.61	0.72	0.79	0.1860	141

* Low voltage - high voltage.

Pump data

Impeller type	Max. solids size	Max. number of starts per hour	Max. installation depth	Enclosure class	Insulation class	Max. liquid temperature	pH
	[mm]		[m]			[°C]	
S-tube®	100	20	20	IP68	F	40	4-14

SEV.65.65.22.(Ex).2

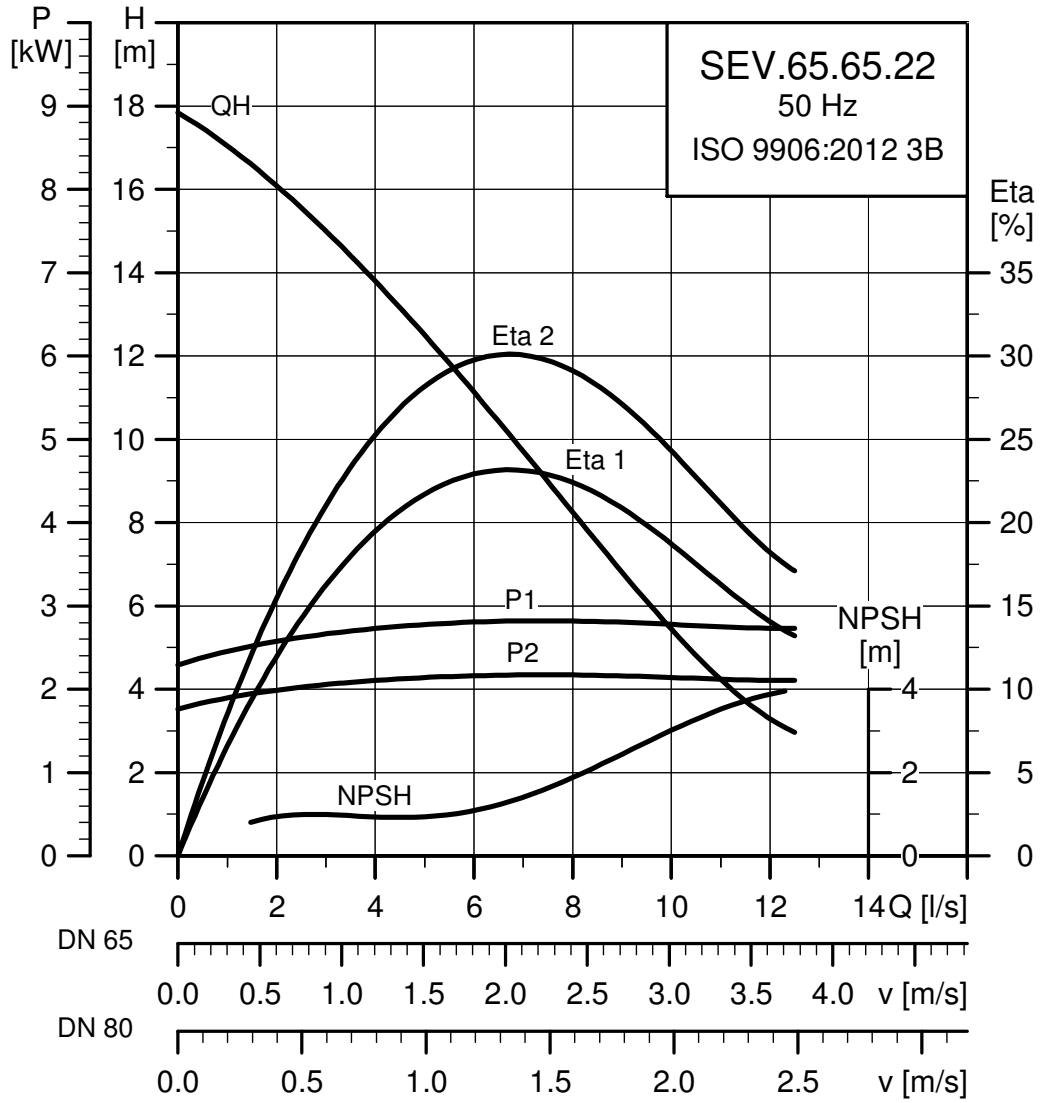

Electrical data

Voltage	P1	P2	Number of poles	Rpm	Starting method	I_N*	I_{start}	η_{motor} [%]			Cos φ			Moment of inertia	Breakdown torque $M_{max.}$
[V]	[kW]	[kW]				[A]	[A]	1/2	3/4	1/1	1/2	3/4	1/1	[kgm²]	[Nm]
3 x 380-415	2.8	2.2	2	2895	DOL	5.1 - 5.0	37	73.5	76.6	77	0.72	0.81	0.86	0.0088	23

* Low voltage - high voltage.

Pump data

Impeller type	Max. solids size	Max. number of starts per hour	Max. installation depth	Enclosure class	Insulation class	Max. liquid temperature	pH
	[mm]		[m]			[°C]	
SuperVortex	65	20	20	IP68	F	40	4-14

SEV.65.65.30.(Ex).2

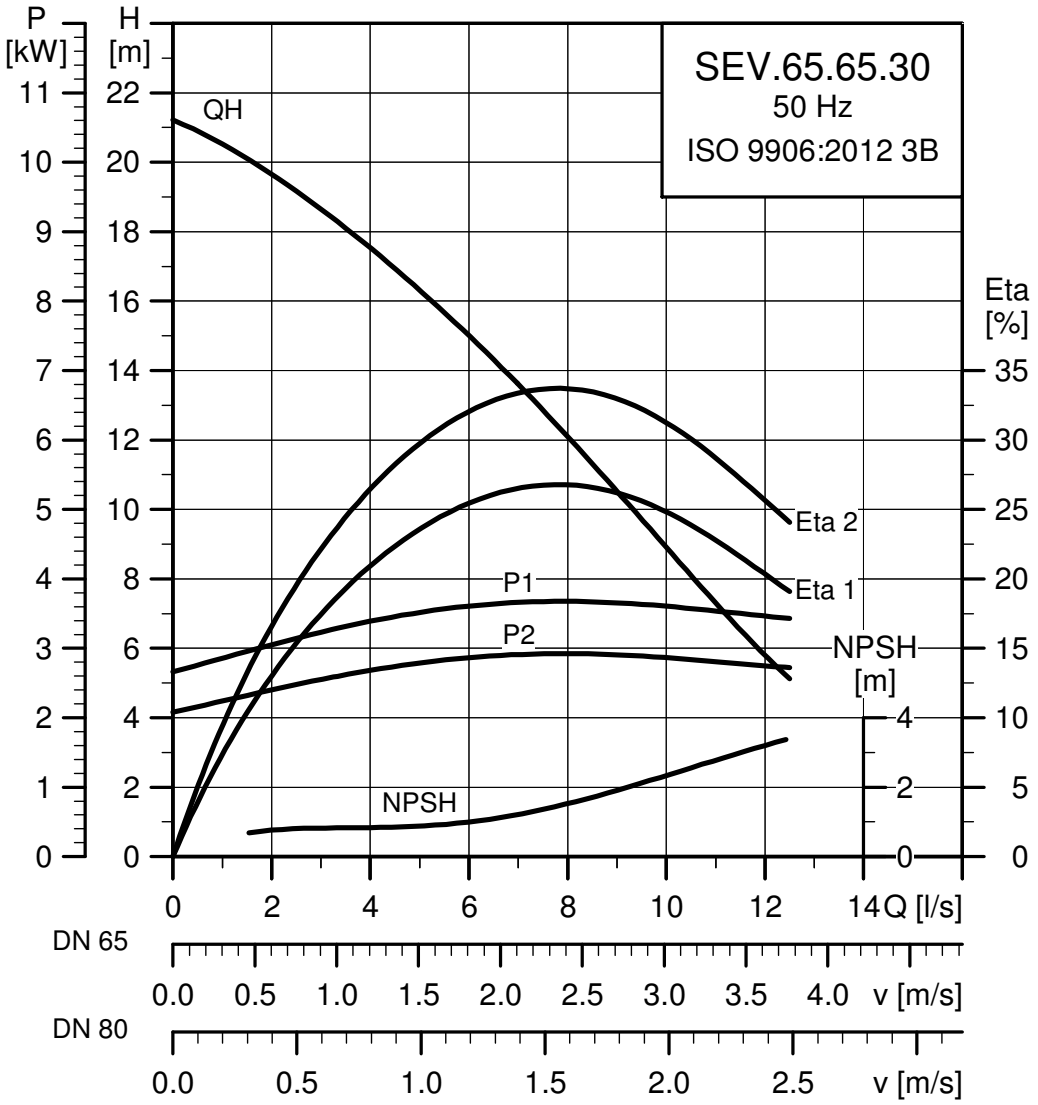

Electrical data

Voltage	P1	P2	Number of poles	Rpm	Starting method	I_N*	I_{start}	η_{motor} [%]			Cos φ			Moment of inertia	Breakdown torque $M_{max.}$
[V]	[kW]	[kW]				[A]	[A]	1/2	3/4	1/1	1/2	3/4	1/1	[kgm²]	[Nm]
3 x 380-415	3.8	3.0	2	2910	DOL	6.8 - 6.5	51	75.1	78.5	79.6	0.74	0.83	0.87	0.0098	33

* Low voltage - high voltage.

Pump data

Impeller type	Max. solids size	Max. number of starts per hour	Max. installation depth	Enclosure class	Insulation class	Max. liquid temperature	pH
	[mm]		[m]			[°C]	
SuperVortex	65	20	20	IP68	F	40	4-14

SEV.65.65.40.(Ex).2

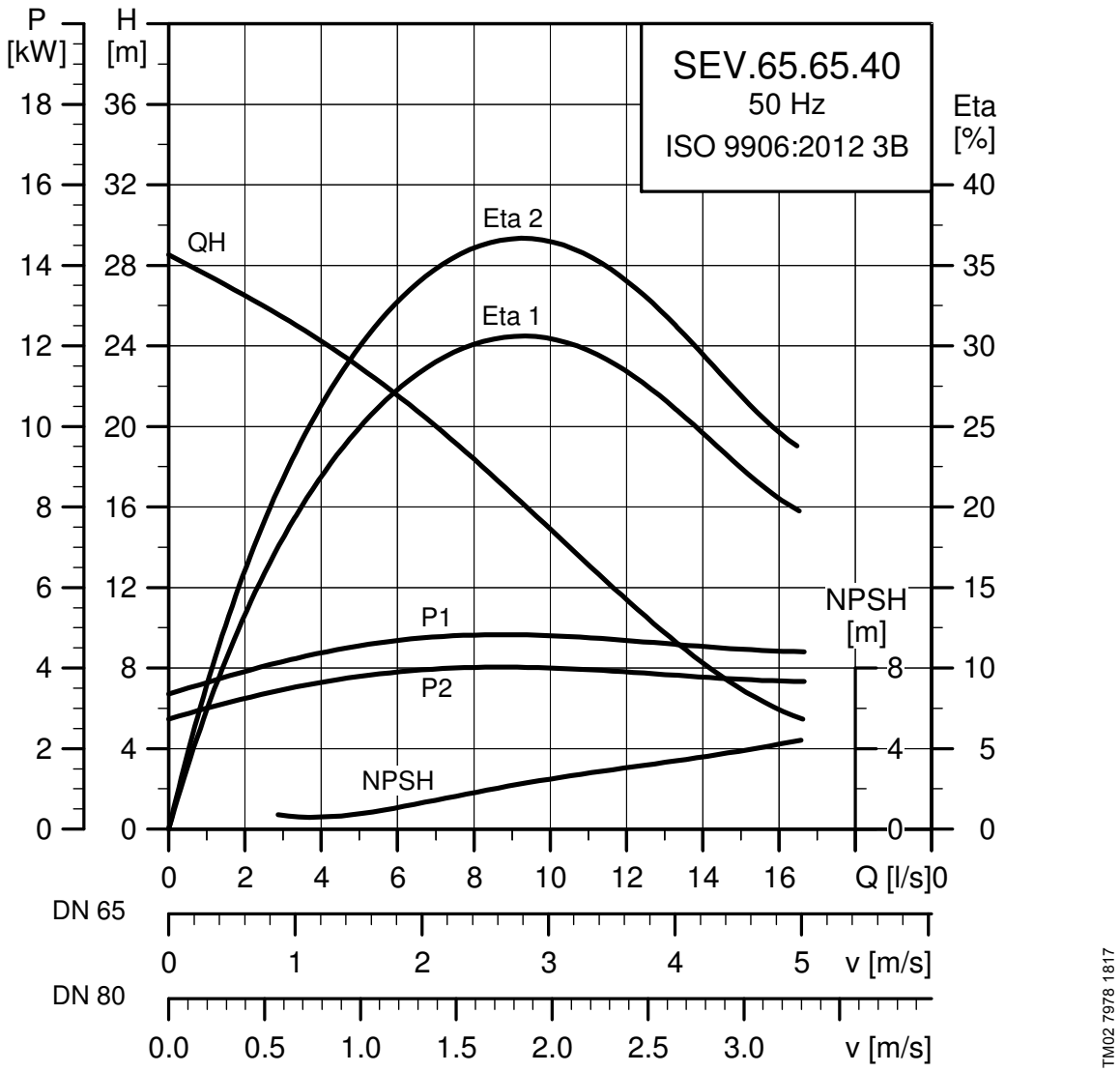

Electrical data

Voltage	P1	P2	Number of poles	Rpm	Starting method	I_N*	I_{start}	η_{motor} [%]			Cos φ			Moment of inertia	Breakdown torque $M_{max.}$
[V]	[kW]	[kW]				[A]	[A]	1/2	3/4	1/1	1/2	3/4	1/1	[kgm²]	[Nm]
3 x 380-415	4.8	4.0	2	2925	Y/D	8.7 - 8.5	71	79.2	82.4	83.3	0.68	0.78	0.84	0.0126	54

* Low voltage - high voltage.

Pump data

Impeller type	Max. solids size	Max. number of starts per hour	Max. installation depth	Enclosure class	Insulation class	Max. liquid temperature	pH
	[mm]		[m]			[°C]	
SuperVortex	65	20	20	IP68	F	40	4-14

SEV.65.80.22.(Ex).2

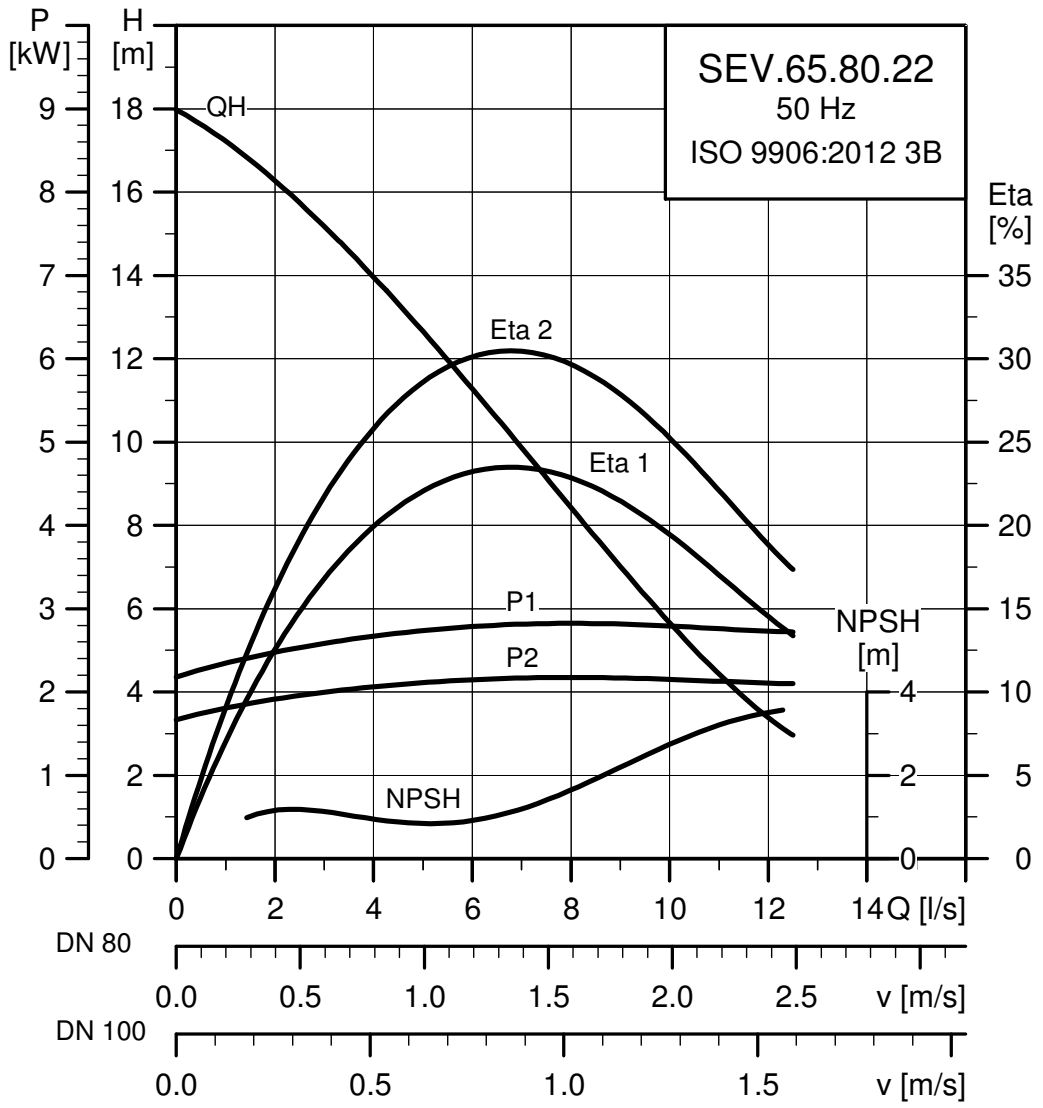

Electrical data

Voltage	P1	P2	Number of poles	Rpm	Starting method	I_N*	I_{start}	η_{motor} [%]			Cos φ			Moment of inertia	Breakdown torque $M_{max.}$
[V]	[kW]	[kW]				[A]	[A]	1/2	3/4	1/1	1/2	3/4	1/1	[kgm²]	[Nm]
3 x 380-415	2.8	2.2	2	2895	DOL	5.1 - 5.0	37	73.5	76.6	77	0.72	0.81	0.86	0.0088	23

* Low voltage - high voltage.

Pump data

Impeller type	Max. solids size	Max. number of starts per hour	Max. installation depth	Enclosure class	Insulation class	Max. liquid temperature	pH
	[mm]		[m]			[°C]	
SuperVortex	65	20	20	IP68	F	40	4-14

SEV.65.80.30.(Ex).2

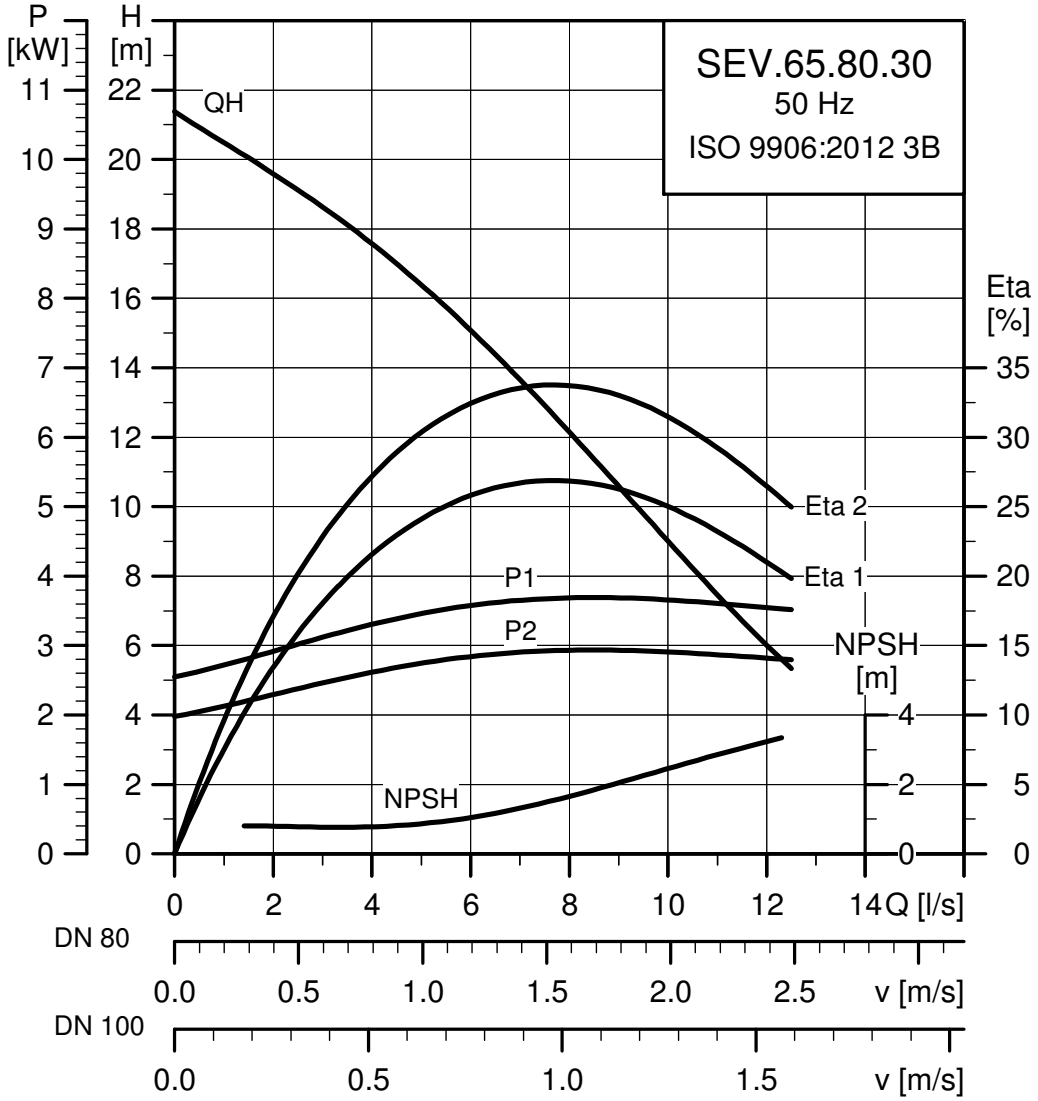

Electrical data

Voltage	P1	P2	Number of poles	Rpm	Starting method	I_N*	I_{start}	η_{motor} [%]			Cos φ			Moment of inertia	Breakdown torque $M_{max.}$
[V]	[kW]	[kW]				[A]	[A]	1/2	3/4	1/1	1/2	3/4	1/1	[kgm²]	[Nm]
3 x 380-415	3.8	3.0	2	2910	DOL	6.8 - 6.5	51	75.1	78.5	79.6	0.74	0.83	0.87	0.0098	33

* Low voltage - high voltage.

Pump data

Impeller type	Max. solids size	Max. number of starts per hour	Max. installation depth	Enclosure class	Insulation class	Max. liquid temperature	pH
	[mm]		[m]			[°C]	
SuperVortex	65	20	20	IP68	F	40	4-14

SEV.65.80.40.(Ex).2

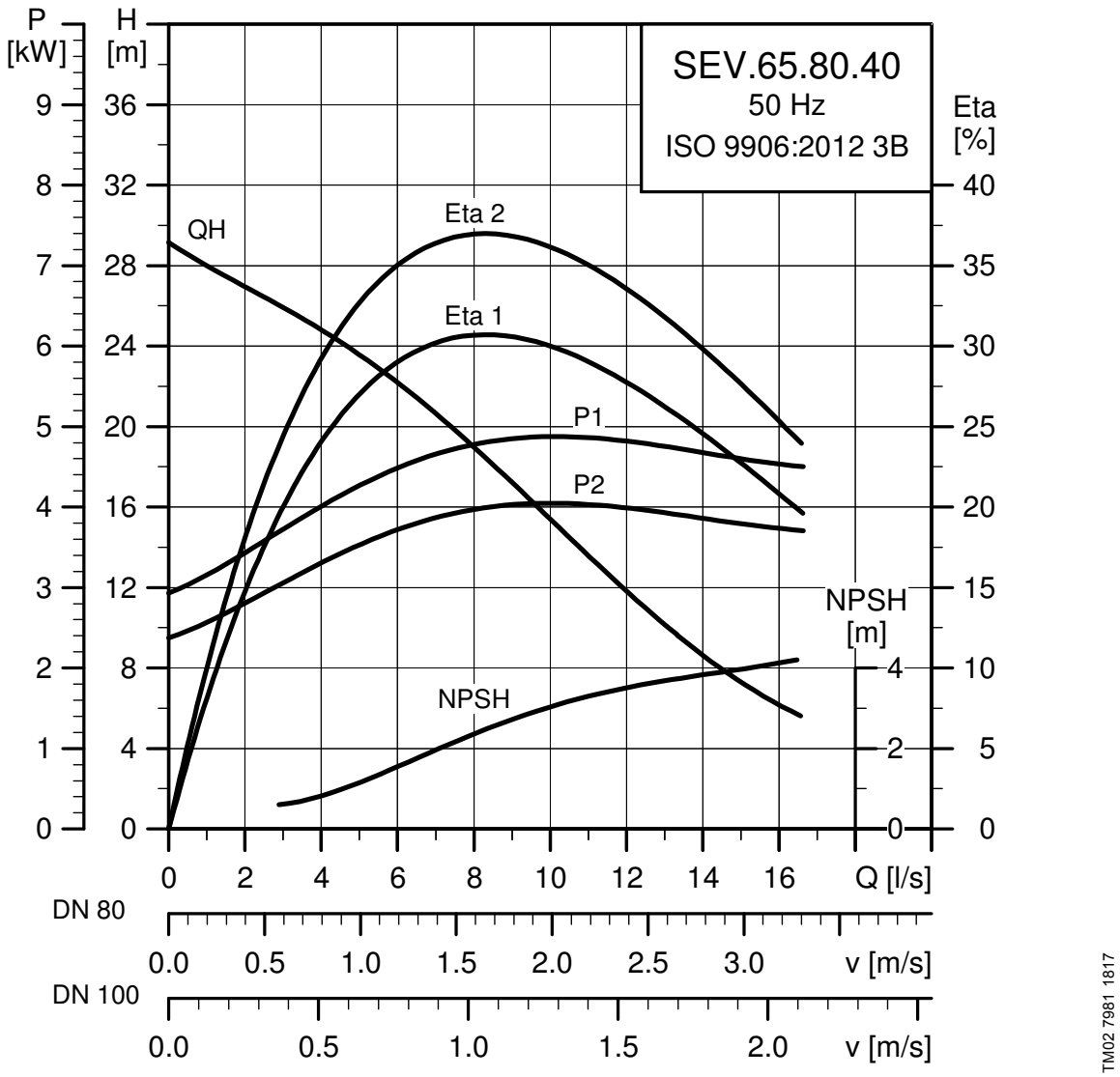

Electrical data

Voltage	P1	P2	Number of poles	Rpm	Starting method	I_N*	I_{start}	η_{motor} [%]			Cos φ			Moment of inertia	Breakdown torque $M_{max.}$
[V]	[kW]	[kW]				[A]	[A]	1/2	3/4	1/1	1/2	3/4	1/1	[kgm²]	[Nm]
3 x 380-415	4.8	4.0	2	2925	Y/D	8.7 - 8.5	71	79.2	82.4	83.3	0.68	0.78	0.84	0.0126	54

* Low voltage - high voltage.

Pump data

Impeller type	Max. solids size	Max. number of starts per hour	Max. installation depth	Enclosure class	Insulation class	Max. liquid temperature	pH
	[mm]		[m]			[°C]	
SuperVortex	65	20	20	IP68	F	40	4-14

SEV.80.80.11.(Ex).4

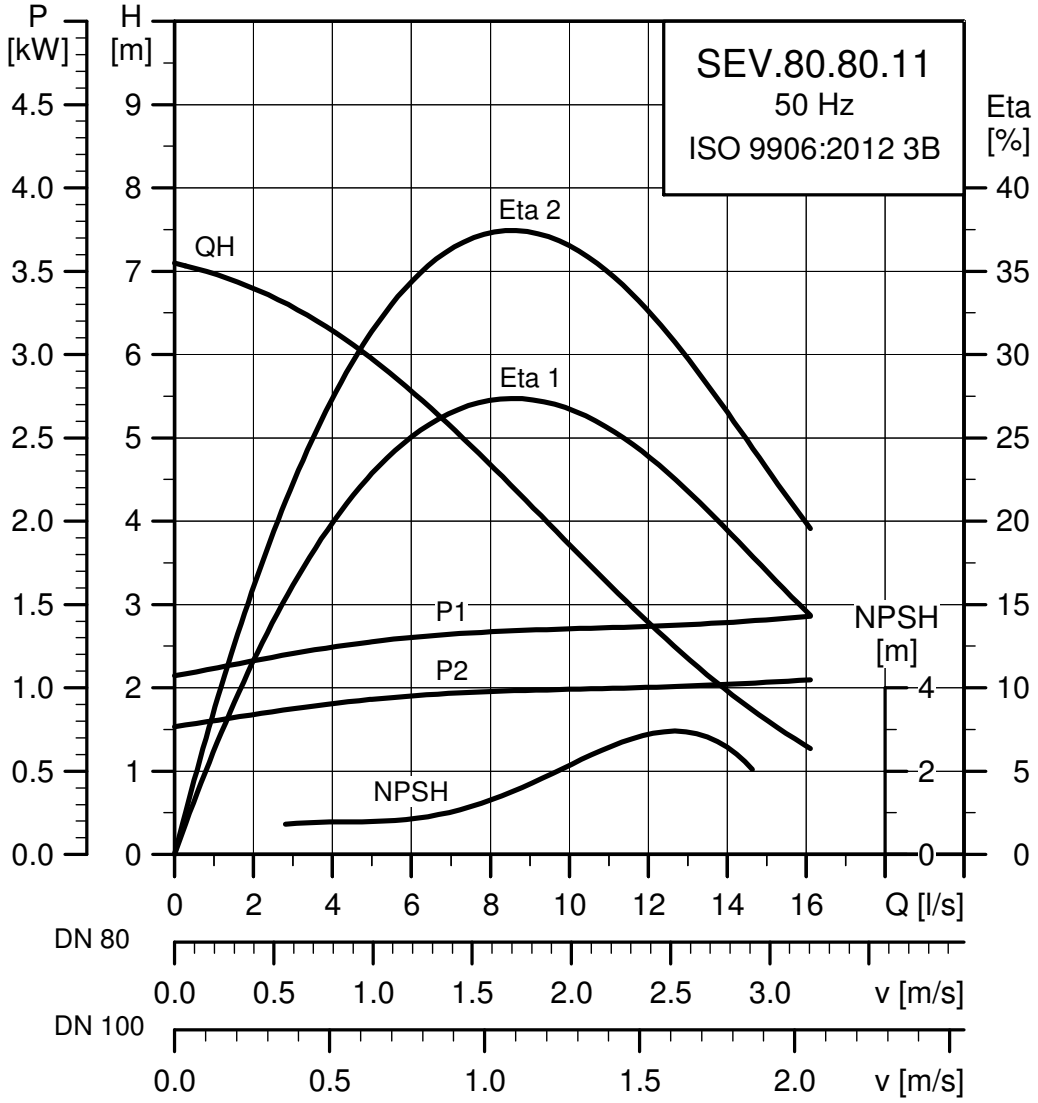

Electrical data

Voltage	P1	P2	Number of poles	Rpm	Starting method	I_N*	I_{start}	η_{motor} [%]			Cos φ			Moment of inertia	Breakdown torque $M_{max.}$
[V]	[kW]	[kW]				[A]	[A]	1/2	3/4	1/1	1/2	3/4	1/1	[kgm²]	[Nm]
3 x 380-415	1.5	1.1	4	1440	DOL	2.8 - 2.9	13	65.6	71.2	73.2	0.52	0.64	0.73	0.0142	21

* Low voltage - high voltage.

Pump data

Impeller type	Max. solids size	Max. number of starts per hour	Max. installation depth	Enclosure class	Insulation class	Max. liquid temperature	pH
	[mm]		[m]			[°C]	
SuperVortex	80	20	20	IP68	F	40	See page 29

SEV.80.80.13.(Ex).4

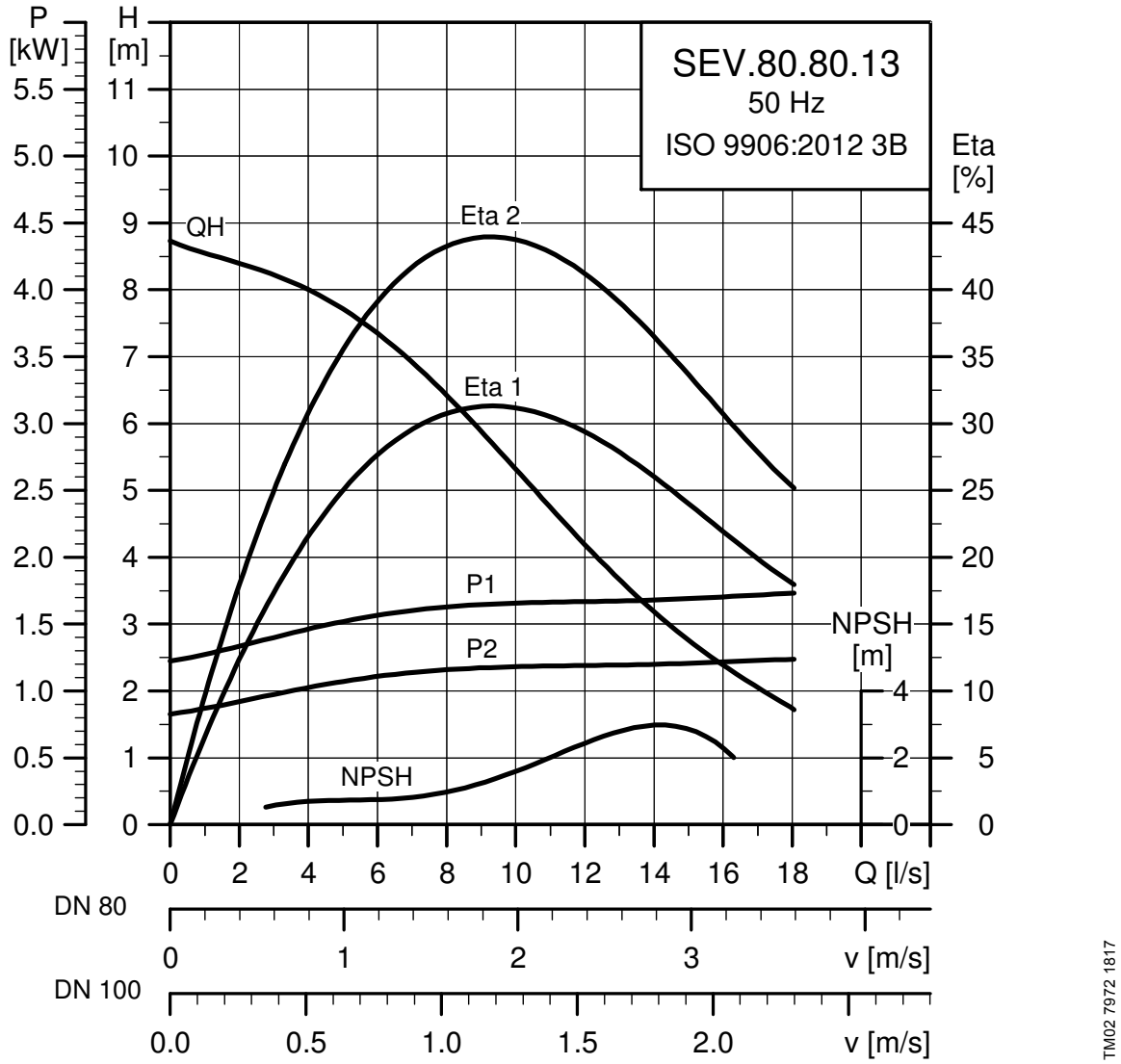

Electrical data

Voltage	P1	P2	Number of poles	Rpm	Starting method	I_N*	I_{start}	η_{motor} [%]			Cos φ			Moment of inertia	Breakdown torque $M_{max.}$
[V]	[kW]	[kW]				[A]	[A]	1/2	3/4	1/1	1/2	3/4	1/1	[kgm²]	[Nm]
3 x 380-415	1.8	1.3	4	1440	DOL	3.8 - 3.9	22	63.9	69.6	71.7	0.51	0.63	0.72	0.0165	28

* Low voltage - high voltage.

Pump data

Impeller type	Max. solids size	Max. number of starts per hour	Max. installation depth	Enclosure class	Insulation class	Max. liquid temperature	pH
	[mm]		[m]			[°C]	
SuperVortex	80	20	20	IP68	F	40	See page 29

SEV.80.80.15.(Ex).4

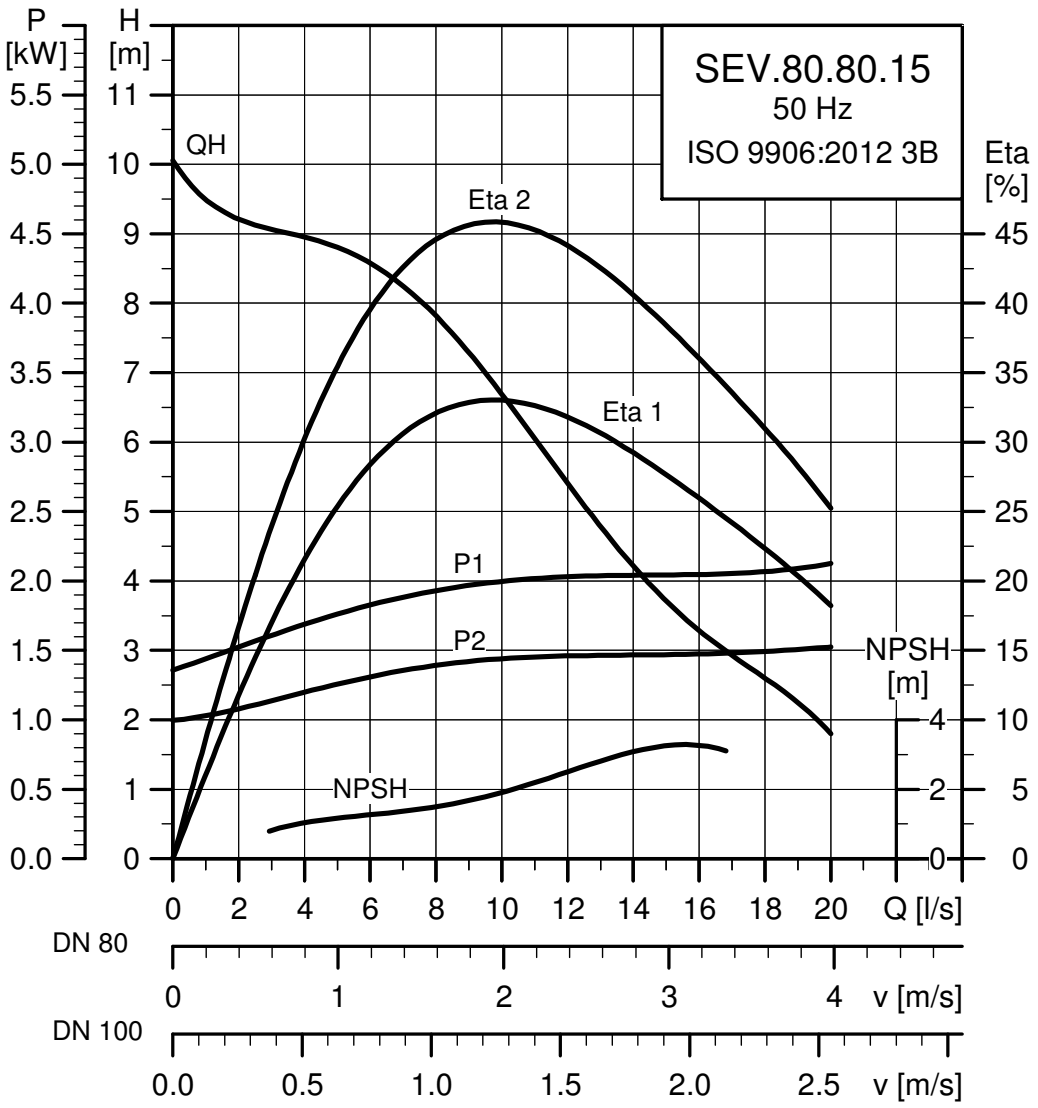

Electrical data

Voltage	P1	P2	Number of poles	Rpm	Starting method	I_N*	I_{start}	η_{motor} [%]			Cos φ			Moment of inertia	Breakdown torque $M_{max.}$
[V]	[kW]	[kW]				[A]	[A]	1/2	3/4	1/1	1/2	3/4	1/1	[kgm²]	[Nm]
3 x 380-415	2.1	1.5	4	1435	DOL	4.2 - 4.2	22	67	71	72	0.56	0.68	0.76	0.0185	28

* Low voltage - high voltage.

Pump data

Impeller type	Max. solids size	Max. number of starts per hour	Max. installation depth	Enclosure class	Insulation class	Max. liquid temperature	pH
	[mm]		[m]			[°C]	
SuperVortex	80	20	20	IP68	F	40	See page 29

SEV.80.80.22.(Ex).4

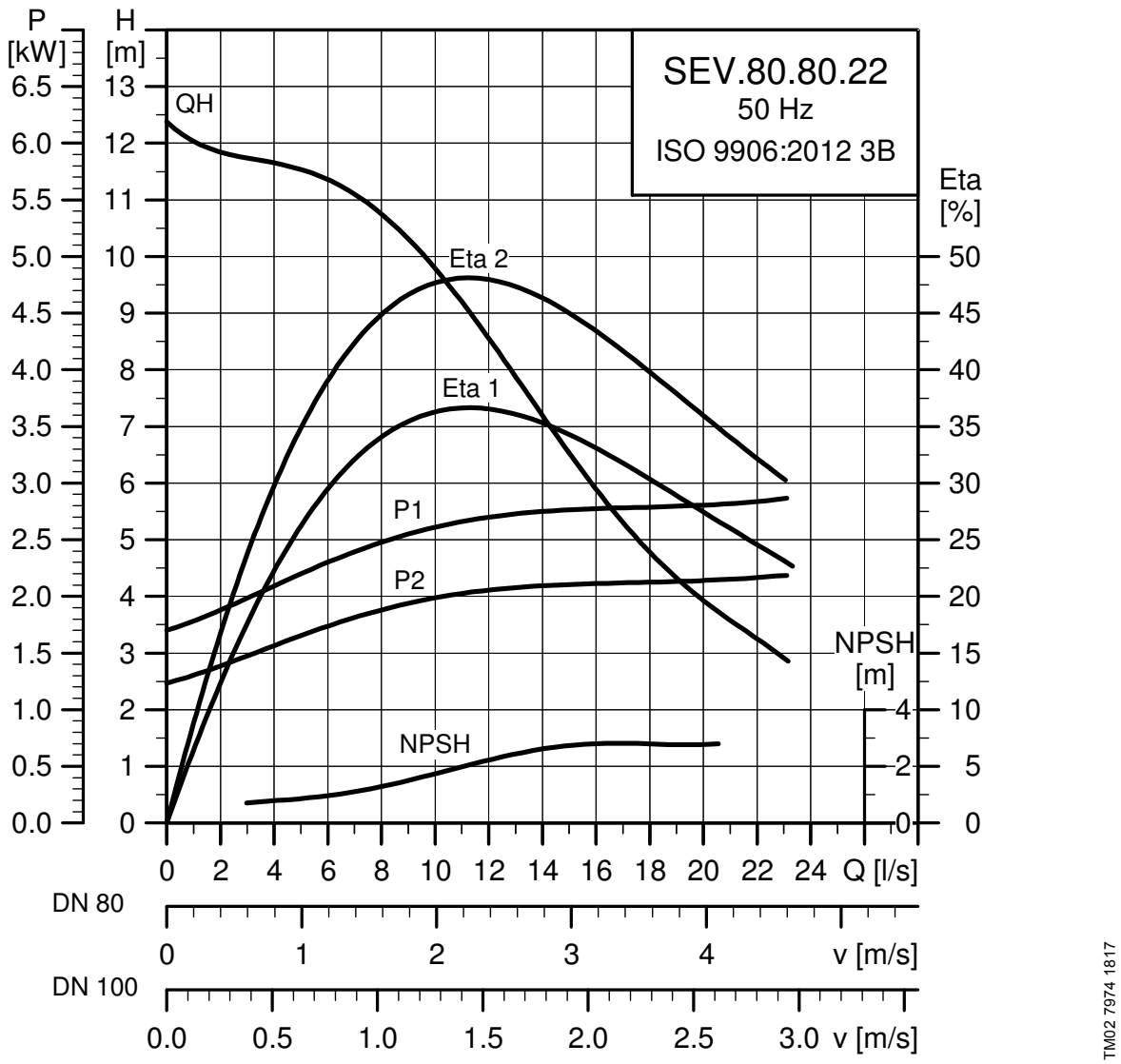

Electrical data

Voltage	P1	P2	Number of poles	Rpm	Starting method	I_N*	I_{start}	η_{motor} [%]			Cos φ			Moment of inertia	Breakdown torque $M_{max.}$
[V]	[kW]	[kW]				[A]	[A]	1/2	3/4	1/1	1/2	3/4	1/1	[kgm²]	[Nm]
3 x 380-415	2.9	2.2	4	1445	DOL	6.0 - 6.0	32	70.9	75.2	76.3	0.53	0.66	0.74	0.0240	45

* Low voltage - high voltage.

Pump data

Impeller type	Max. solids size	Max. number of starts per hour	Max. installation depth	Enclosure class	Insulation class	Max. liquid temperature	pH
	[mm]		[m]			[°C]	
SuperVortex	80	20	20	IP68	F	40	See page 29

SEV.80.80.40.(Ex).4

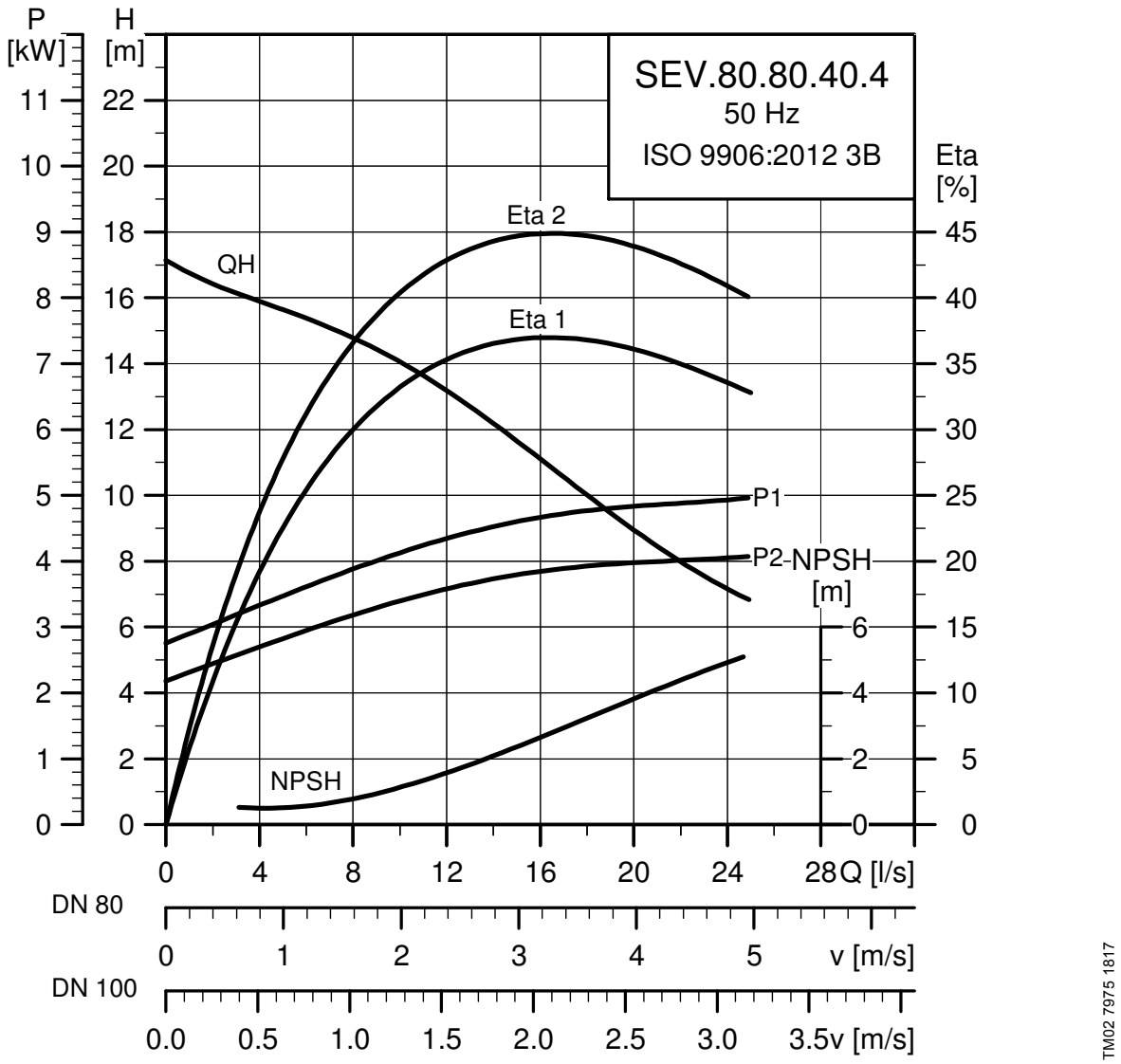

Electrical data

Voltage	P1	P2	Number of poles	Rpm	Starting method	I_N*	I_{start}	η_{motor} [%]			Cos φ			Moment of inertia	Breakdown torque $M_{max.}$
[V]	[kW]	[kW]				[A]	[A]	1/2	3/4	1/1	1/2	3/4	1/1	[kgm²]	[Nm]
3 x 380-415	4.9	4.0	4	1460	Y/D	10.0 - 10.2	67	78.2	81.7	82.2	0.52	0.65	0.73	0.0479	100

* Low voltage - high voltage.

Pump data

Impeller type	Max. solids size	Max. number of starts per hour	Max. installation depth	Enclosure class	Insulation class	Max. liquid temperature	pH
	[mm]		[m]			[°C]	
SuperVortex	80	20	20	IP68	F	40	4-10

SEV.80.80.40.(Ex).2

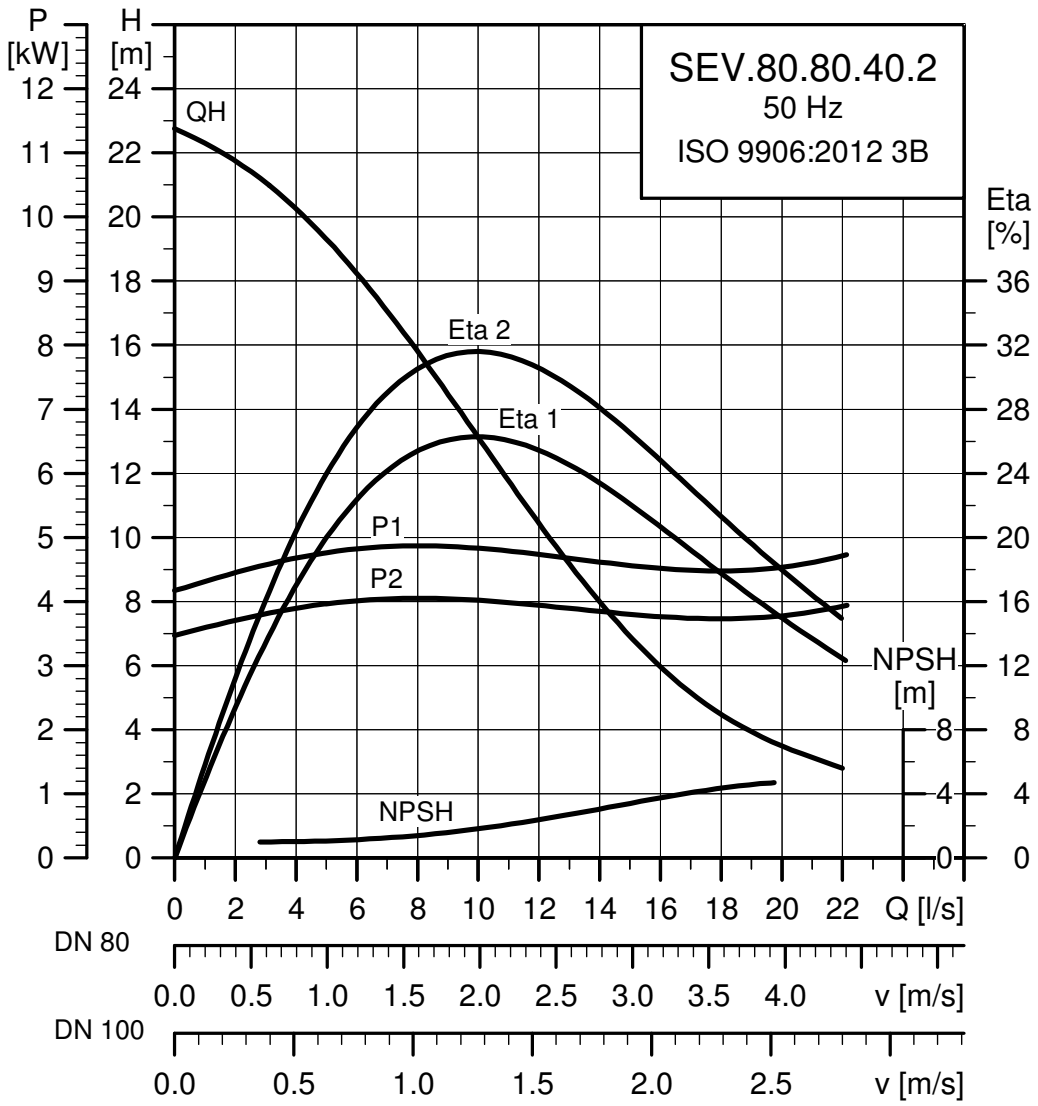

Electrical data

Voltage	P1	P2	Number of poles	Rpm	Starting method	I_N*	I_{start}	η_{motor} [%]			Cos φ			Moment of inertia	Breakdown torque $M_{max.}$
[V]	[kW]	[kW]				[A]	[A]	1/2	3/4	1/1	1/2	3/4	1/1	[kgm²]	[Nm]
3 x 380-415	4.8	4.0	2	2925	Y/D	8.7 - 8.5	71	79.2	82.4	83.3	0.68	0.78	0.84	0.0127	54

* Low voltage - high voltage.

Pump data

Impeller type	Max. solids size	Max. number of starts per hour	Max. installation depth	Enclosure class	Insulation class	Max. liquid temperature	pH
	[mm]		[m]			[°C]	
SuperVortex	80	20	20	IP68	F	40	See page 29

SEV.80.80.60.(Ex).2

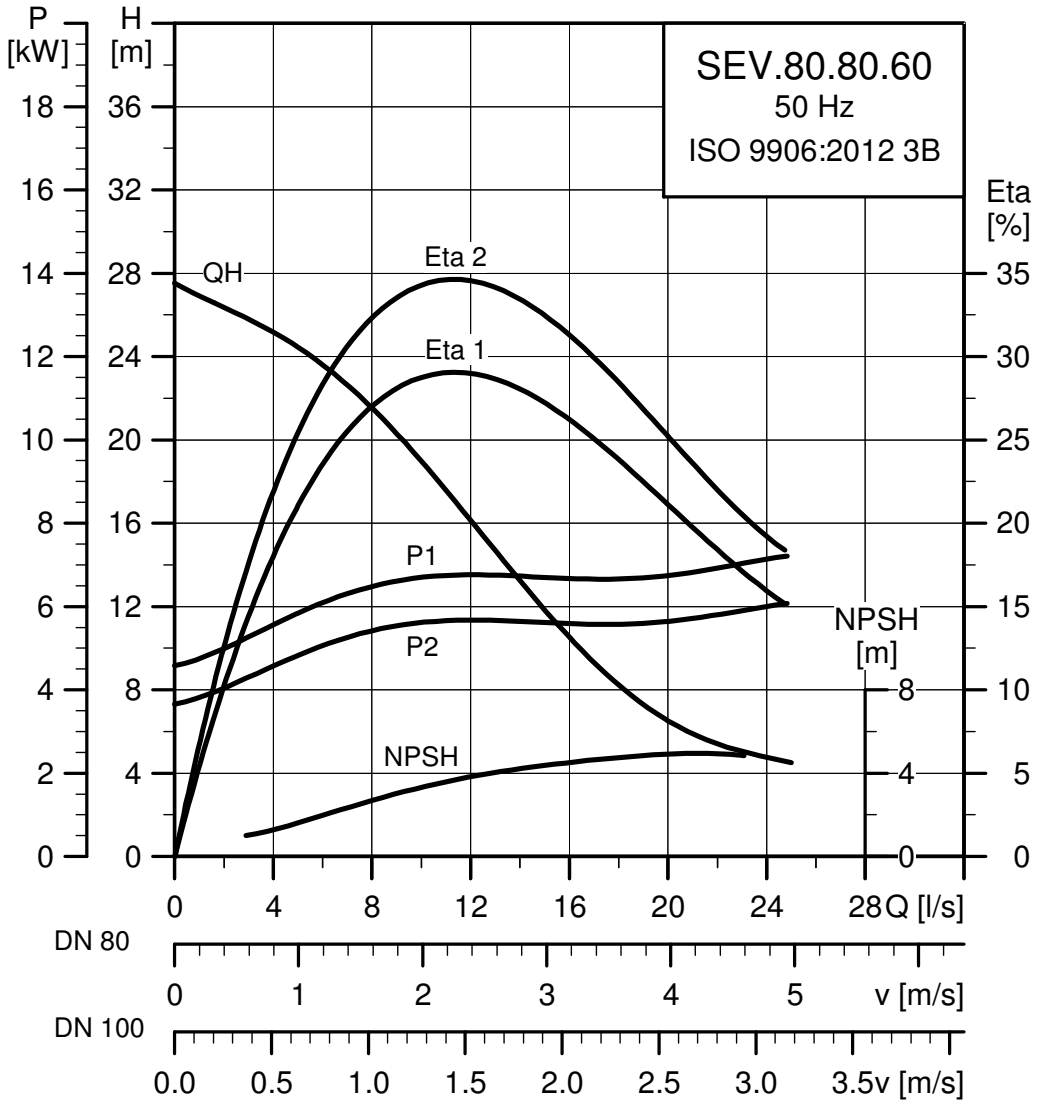

Electrical data

Voltage	P1	P2	Number of poles	Rpm	Starting method	I_N*	I_{start}	η_{motor} [%]			Cos φ			Moment of inertia	Breakdown torque $M_{max.}$
[V]	[kW]	[kW]				[A]	[A]	1/2	3/4	1/1	1/2	3/4	1/1	[kgm²]	[Nm]
3 x 380-415	7.1	6.0	2	2945	Y/D	13.7 - 14.2	148	77.5	82.2	84.1	0.58	0.7	0.78	0.0190	112

* Low voltage - high voltage.

Pump data

Impeller type	Max. solids size	Max. number of starts per hour	Max. installation depth	Enclosure class	Insulation class	Max. liquid temperature	pH
	[mm]		[m]			[°C]	
SuperVortex	80	20	20	IP68	F	40	See page 29

SEV.80.80.75.(Ex).2

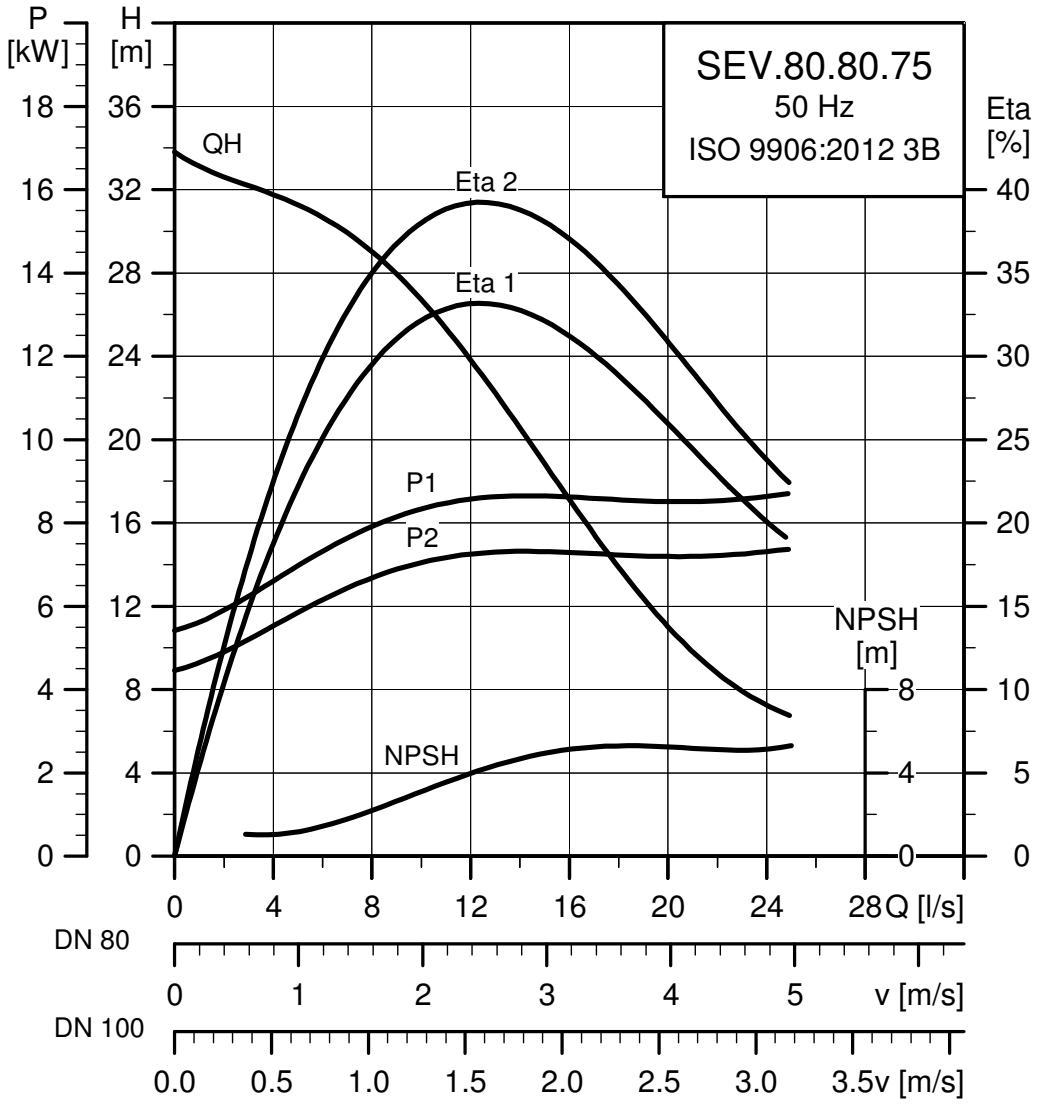

Electrical data

Voltage	P1	P2	Number of poles	Rpm	Starting method	I_N*	I_{start}	η_{motor} [%]			Cos φ			Moment of inertia	Breakdown torque $M_{max.}$
[V]	[kW]	[kW]				[A]	[A]	1/2	3/4	1/1	1/2	3/4	1/1	[kgm²]	[Nm]
3 x 380-415	8.9	7.5	2	2940	Y/D	16.5 - 16.2	152	80.1	83.8	84.8	0.65	0.76	0.83	0.0215	112

* Low voltage - high voltage.

Pump data

Impeller type	Max. solids size	Max. number of starts per hour	Max. installation depth	Enclosure class	Insulation class	Max. liquid temperature	pH
	[mm]		[m]			[°C]	
SuperVortex	80	20	20	IP68	F	40	See page 29

SEV.80.80.92.(Ex).2

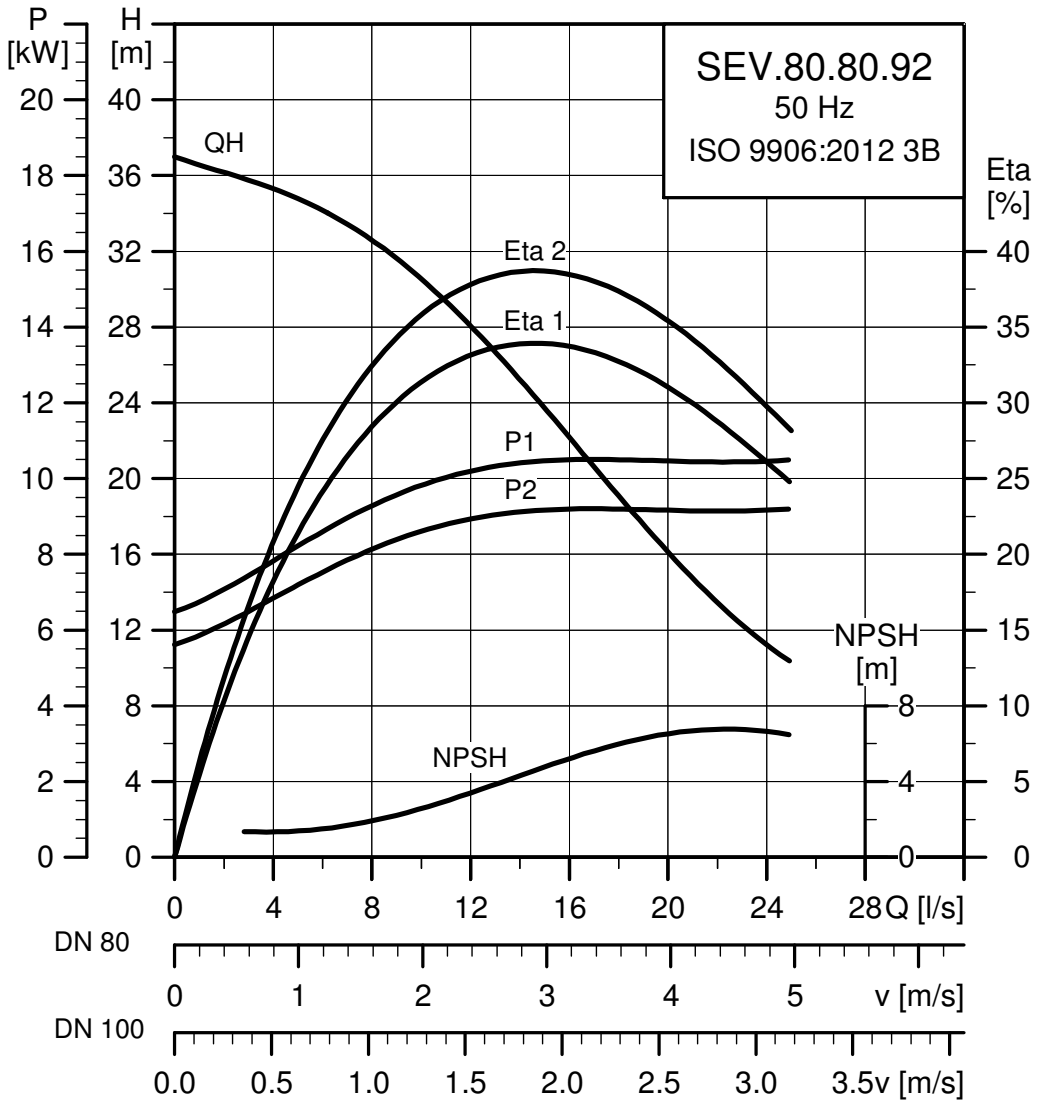

Electrical data

Voltage	P1	P2	Number of poles	Rpm	Starting method	I_N*	I_{start}	η_{motor} [%]			Cos φ			Moment of inertia	Breakdown torque $M_{max.}$
[V]	[kW]	[kW]				[A]	[A]	1/2	3/4	1/1	1/2	3/4	1/1	[kgm²]	[Nm]
3 x 380-415	10.5	9.2	2	2935	Y/D	18.8 - 17.5	162	85.4	87.4	87.6	0.78	0.85	0.89	0.0334	99

* Low voltage - high voltage.

Pump data

Impeller type	Max. solids size	Max. number of starts per hour	Max. installation depth	Enclosure class	Insulation class	Max. liquid temperature	pH
	[mm]		[m]			[°C]	
SuperVortex	80	20	20	IP68	F	40	See page 29

SEV.80.80.110.(Ex).2

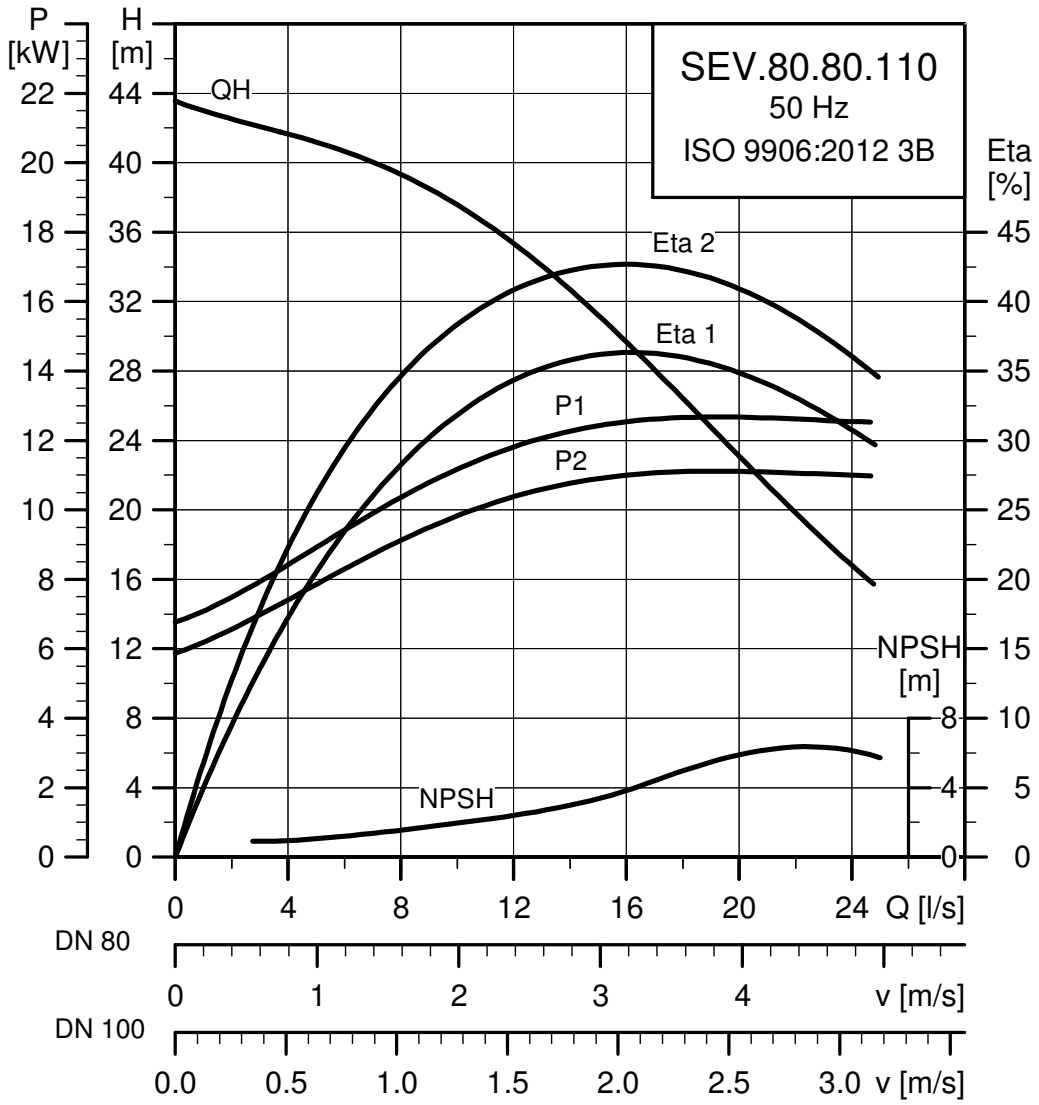

Electrical data

Voltage	P1	P2	Number of poles	Rpm	Starting method	I_N*	I_{start}	η_{motor} [%]			Cos φ			Moment of inertia	Breakdown torque $M_{max.}$
[V]	[kW]	[kW]				[A]	[A]	1/2	3/4	1/1	1/2	3/4	1/1	[kgm²]	[Nm]
3 x 380-415	12.6	11.0	2	2935	Y/D	22.7 - 21.4	162	86.4	88.1	87.7	0.75	0.84	0.88	0.0368	118

* Low voltage - high voltage.

Pump data

Impeller type	Max. solids size	Max. number of starts per hour	Max. installation depth	Enclosure class	Insulation class	Max. liquid temperature	pH
	[mm]		[m]			[°C]	
SuperVortex	80	20	20	IP68	F	40	See page 29

SEV.80.100.11.(Ex).4

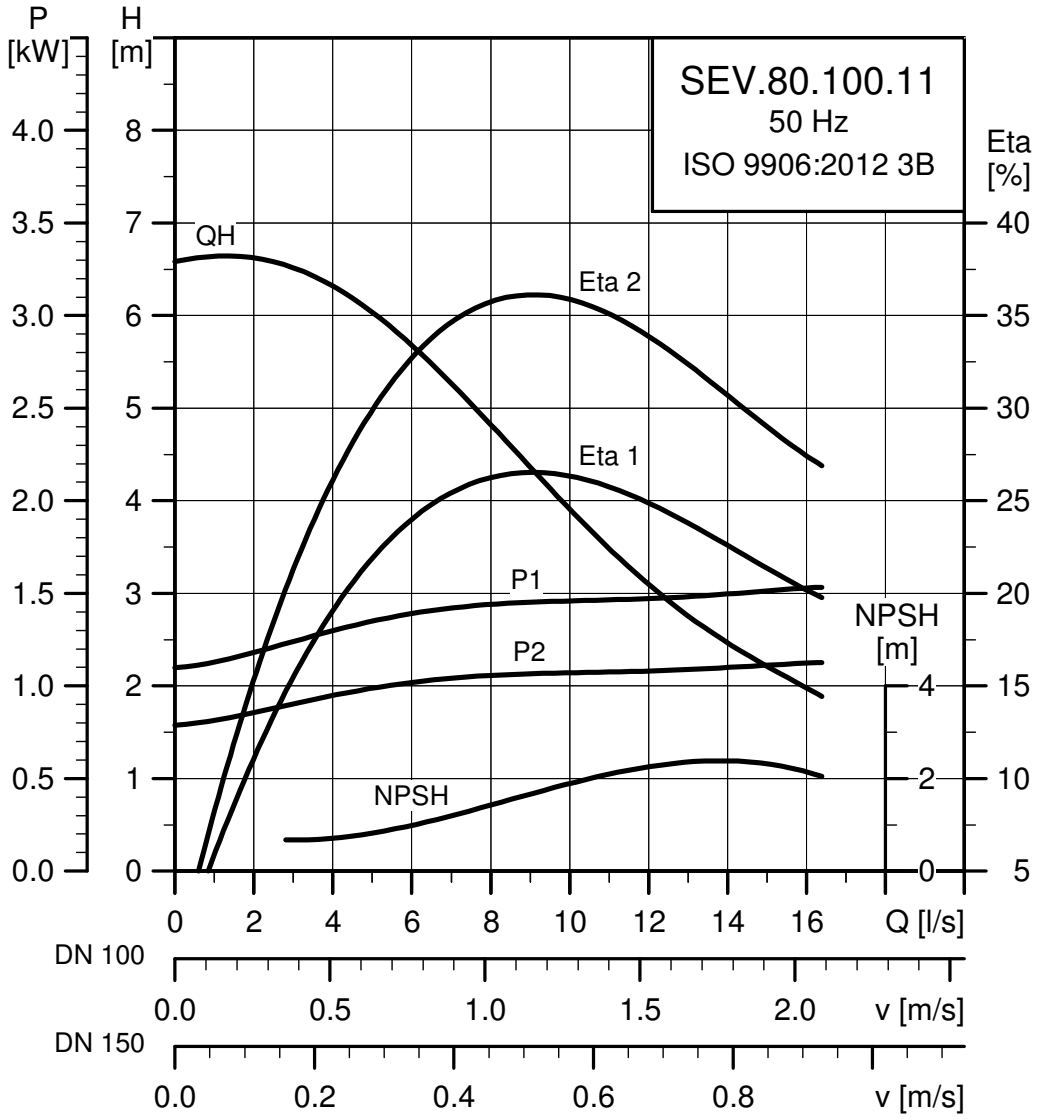

Electrical data

Voltage	P1	P2	Number of poles	Rpm	Starting method	I_N*	I_{start}	η_{motor} [%]			Cos φ			Moment of inertia	Breakdown torque $M_{max.}$
[V]	[kW]	[kW]				[A]	[A]	1/2	3/4	1/1	1/2	3/4	1/1	[kgm²]	[Nm]
3 x 380-415	1.5	1.1	4	1440	DOL	2.8 - .2.9	12	65.6	71.2	73.2	0.52	0.64	0.73	0.0142	21

* Low voltage - high voltage.

Pump data

Impeller type	Max. solids size	Max. number of starts per hour	Max. installation depth	Enclosure class	Insulation class	Max. liquid temperature	pH
	[mm]		[m]			[°C]	
SuperVortex	80	20	20	IP68	F	40	See page 29

SEV.80.100.13.(Ex).4

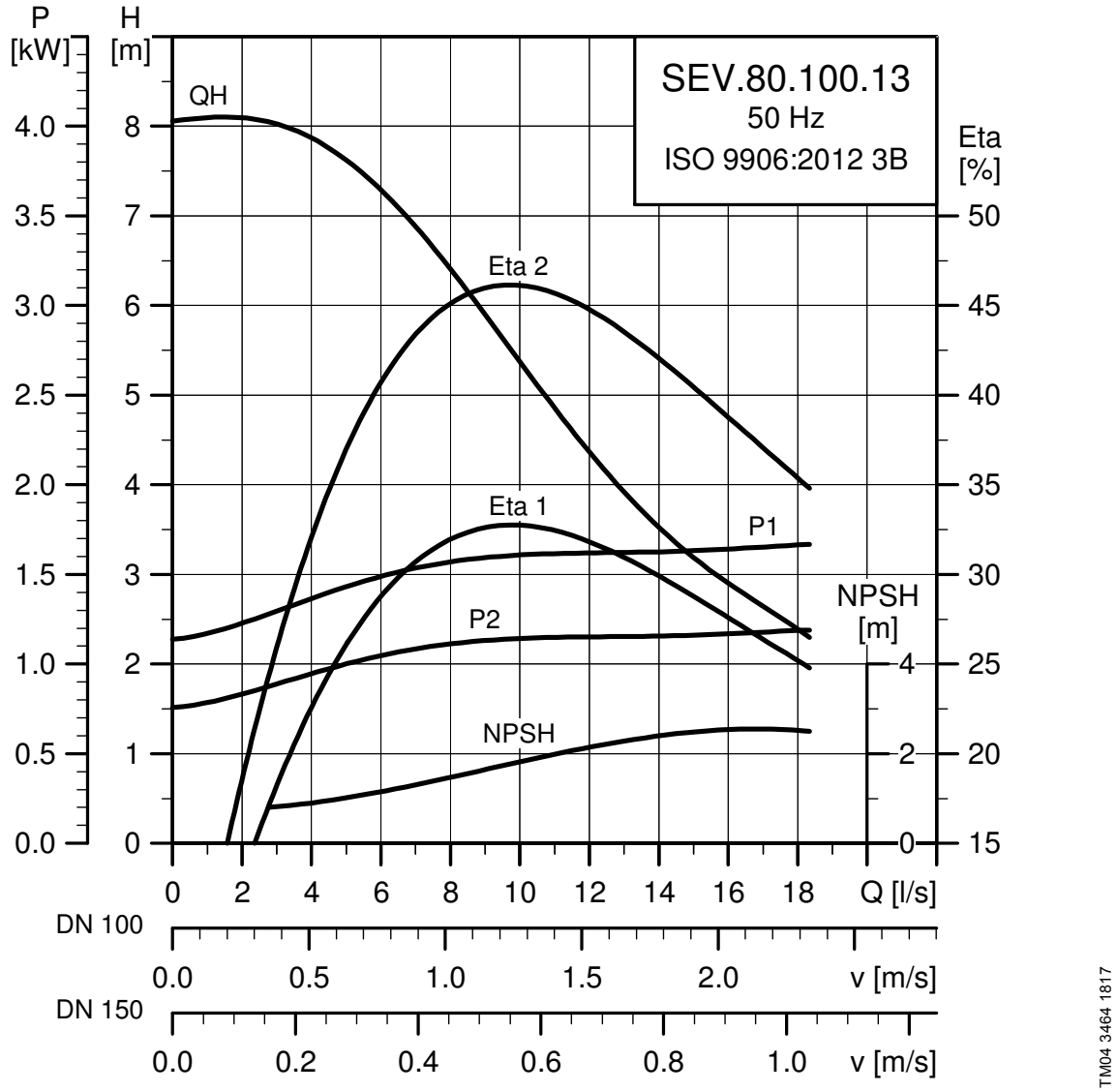

Electrical data

Voltage	P1	P2	Number of poles	Rpm	Starting method	I_N*	I_{start}	η_{motor} [%]			Cos φ			Moment of inertia	Breakdown torque $M_{max.}$
[V]	[kW]	[kW]				[A]	[A]	1/2	3/4	1/1	1/2	3/4	1/1	[kgm²]	[Nm]
3 x 380-415	1.8	1.3	4	1440	DOL	3.8 - 3.9	21	63.9	69.6	71.7	0.51	0.63	0.72	0.0165	28

* Low voltage - high voltage.

Pump data

Impeller type	Max. solids size	Max. number of starts per hour	Max. installation depth	Enclosure class	Insulation class	Max. liquid temperature	pH
	[mm]		[m]			[°C]	
SuperVortex	80	20	20	IP68	F	40	See page 29

SEV.80.100.15.(Ex).4

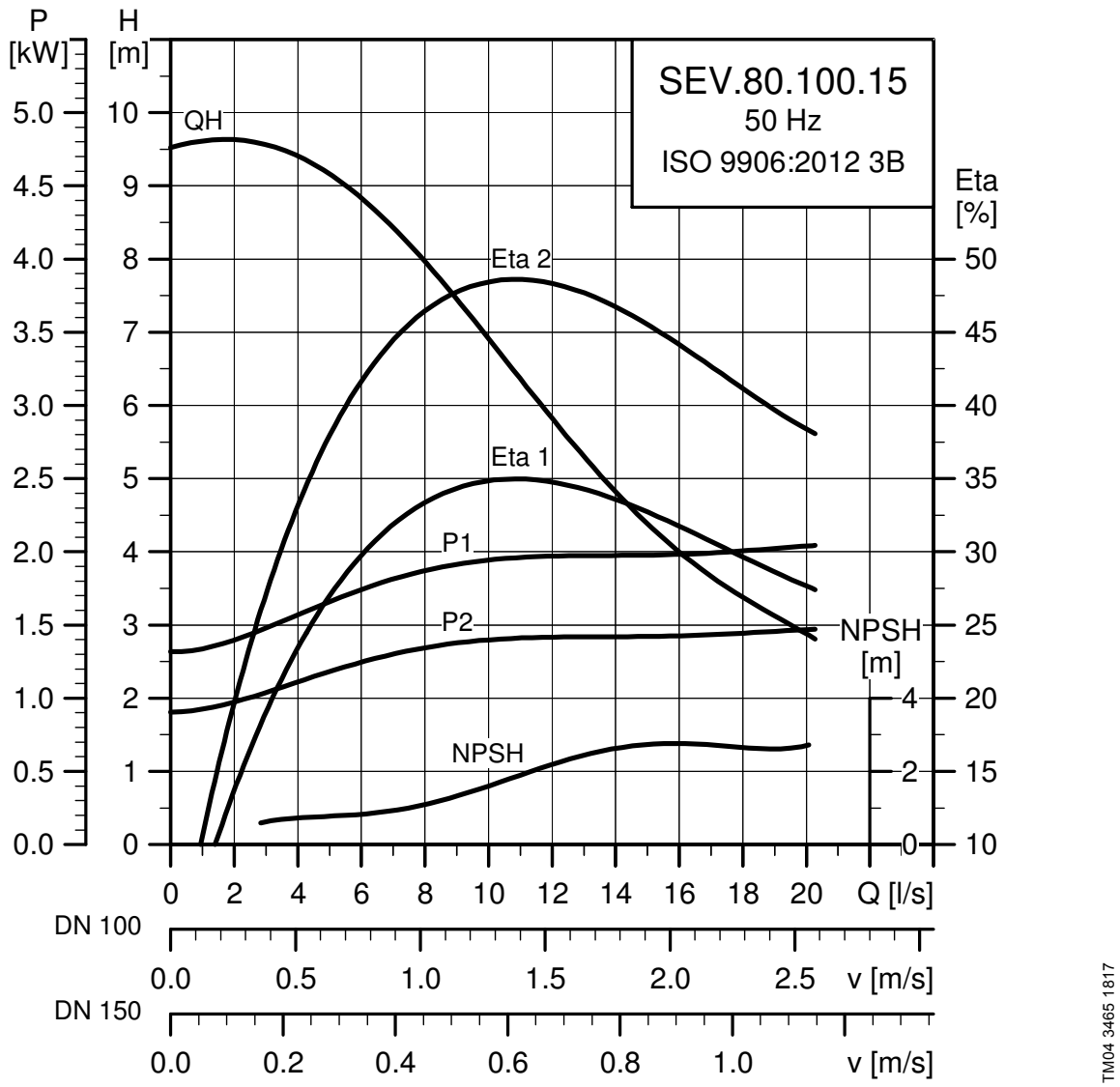

Electrical data

Voltage [V]	P1 [kW]	P2 [kW]	Number of poles	Rpm	Starting method	I_N* [A]	I_{start} [A]	η_{motor} [%] 1/2	3/4	1/1	Cos φ 1/2	3/4	1/1	Moment of inertia [kgm²]	Breakdown torque $M_{max.}$ [Nm]
3 x 380-415	2.1	1.5	4	1435	DOL	4.2 - 4.3	21	67	71	72	0.56	0.68	0.76	0.0185	28

* Low voltage - high voltage.

Pump data

Impeller type	Max. solids size [mm]	Max. number of starts per hour	Max. installation depth [m]	Enclosure class	Insulation class	Max. liquid temperature [°C]	pH
SuperVortex	80	20	20	IP68	F	40	See page 29

SEV.80.100.22.(Ex).4

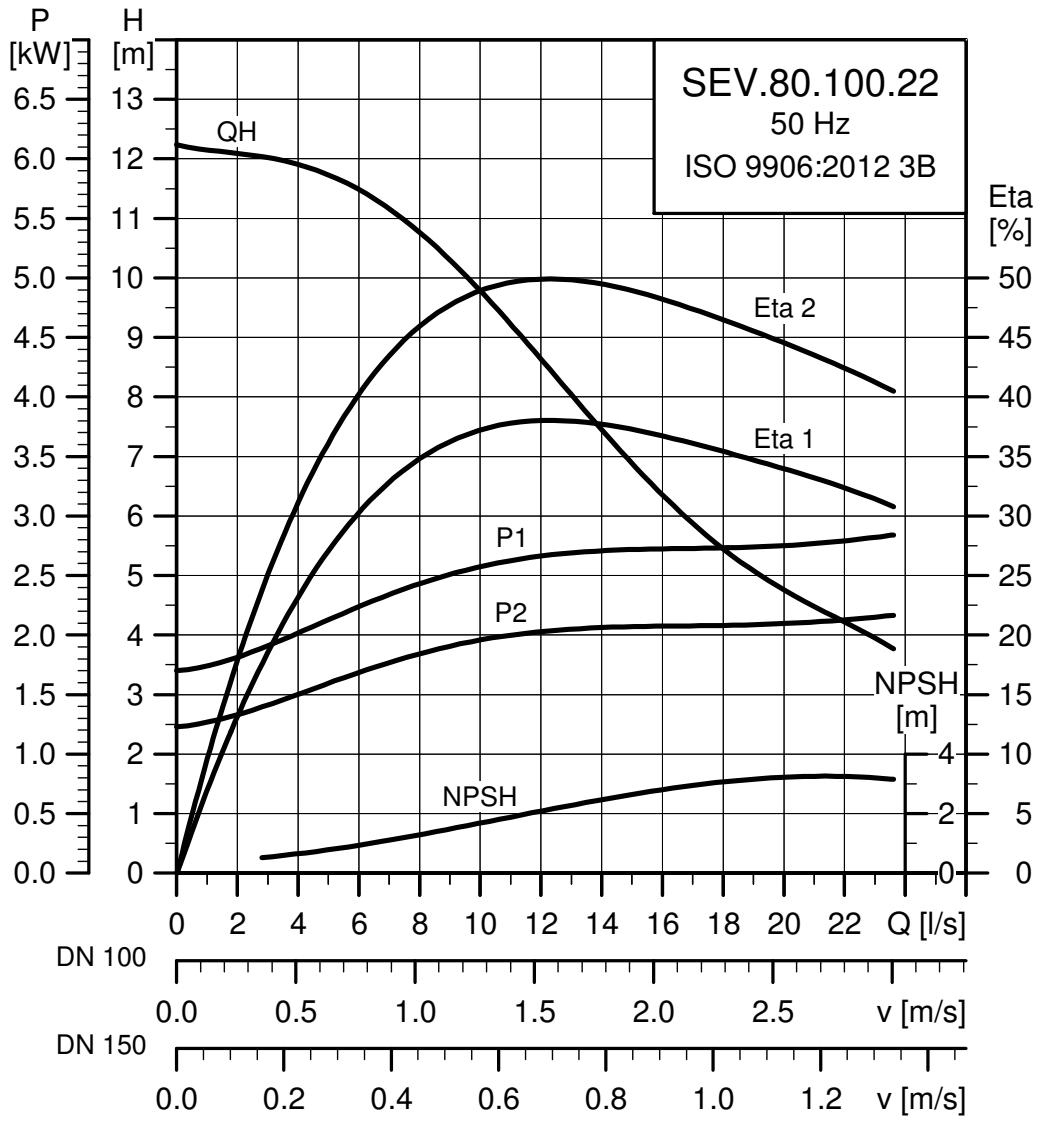

Electrical data

Voltage	P1	P2	Number of poles	Rpm	Starting method	I_N*	I_{start}	η_{motor} [%]			Cos φ			Moment of inertia	Breakdown torque $M_{max.}$
[V]	[kW]	[kW]				[A]	[A]	1/2	3/4	1/1	1/2	3/4	1/1	[kgm²]	[Nm]
3 x 380-415	2.9	2.2	4	1445	DOL	6.0 - 6.0	32	70.9	75.2	76.3	0.53	0.66	0.74	0.024	45

* Low voltage - high voltage.

Pump data

Impeller type	Max. solids size	Max. number of starts per hour	Max. installation depth	Enclosure class	Insulation class	Max. liquid temperature	pH
	[mm]		[m]			[°C]	
SuperVortex	80	20	20	IP68	F	40	See page 29

SEV.80.100.40.(Ex).4

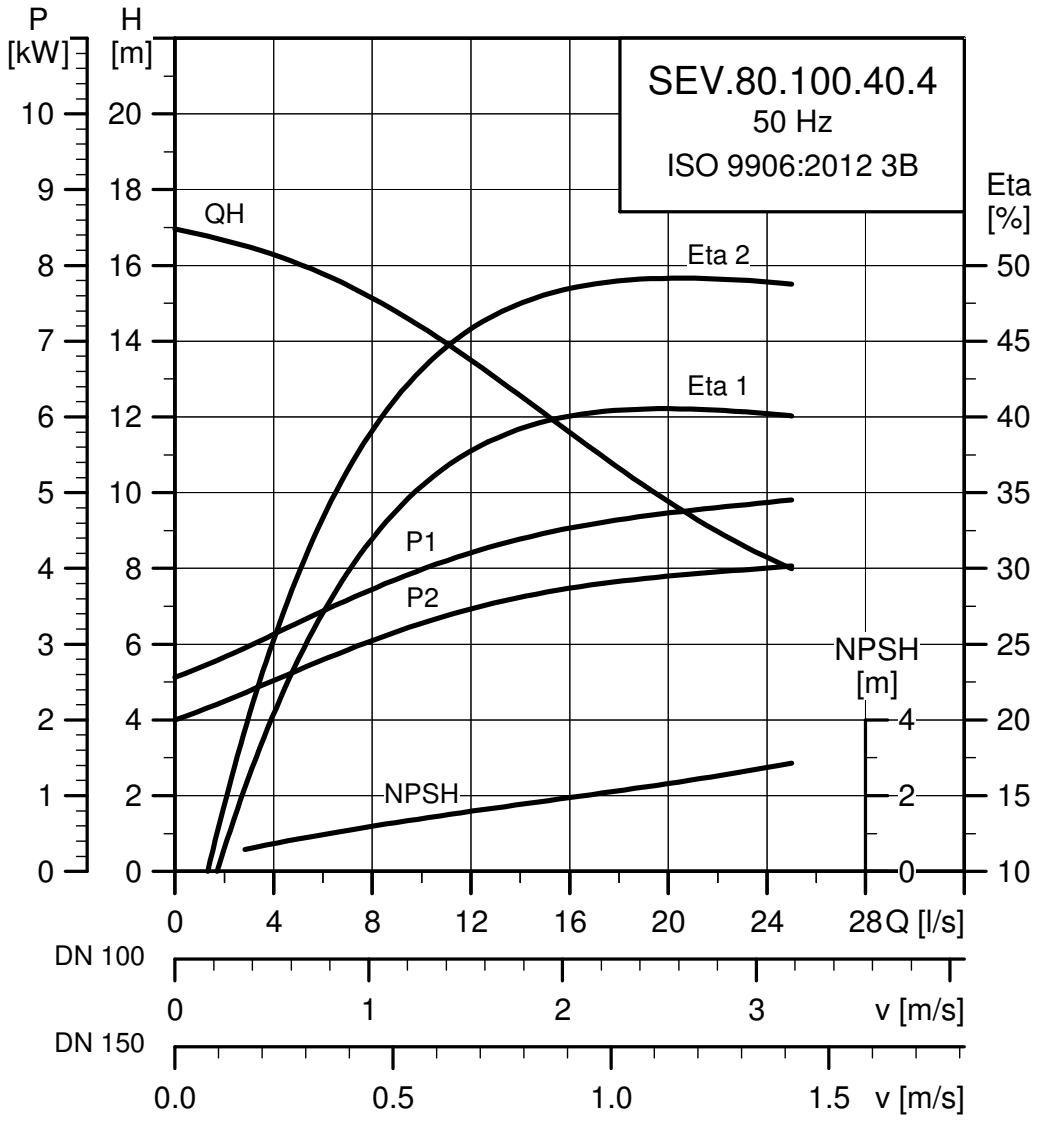

Electrical data

Voltage	P1	P2	Number of poles	Rpm	Starting method	I_N*	I_{start}	η_{motor} [%]			Cos φ			Moment of inertia	Breakdown torque $M_{max.}$
[V]	[kW]	[kW]				[A]	[A]	1/2	3/4	1/1	1/2	3/4	1/1	[kgm²]	[Nm]
3 x 380-415	4.9	4	4	1460	DOL	10.0 - 10.2	64	78.2	81.7	82.2	0.52	0.65	0.73	0.0479	100

* Low voltage - high voltage.

Pump data

Impeller type	Max. solids size	Max. number of starts per hour	Max. installation depth	Enclosure class	Insulation class	Max. liquid temperature	pH
	[mm]		[m]			[°C]	
SuperVortex	80	20	20	IP68	F	40	See page 29

SEV.80.100.40.(Ex).2

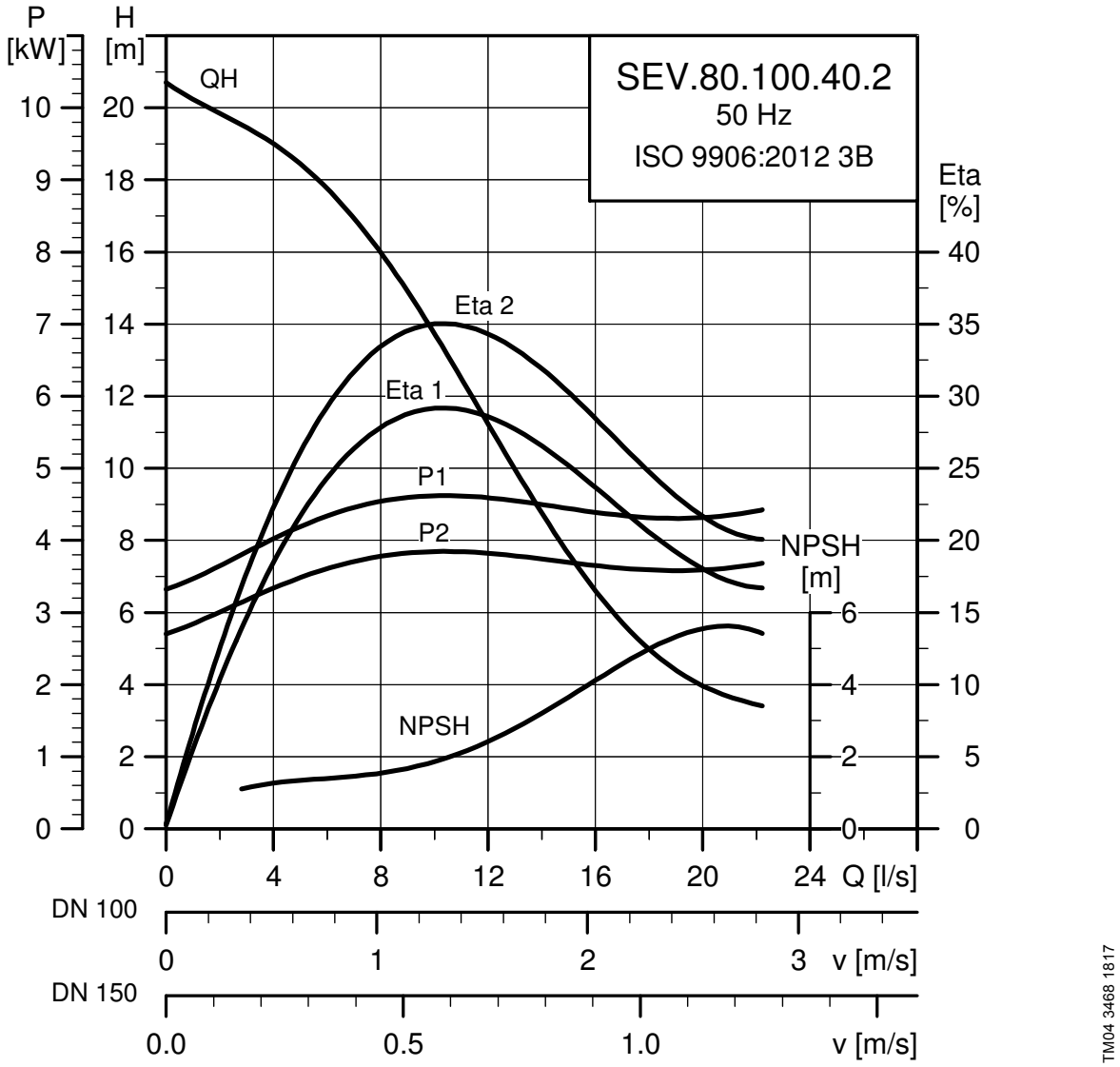

Electrical data

Voltage	P1	P2	Number of poles	Rpm	Starting method	I_N*	I_{start}	η_{motor} [%]			Cos φ			Moment of inertia	Breakdown torque $M_{max.}$
[V]	[kW]	[kW]				[A]	[A]	1/2	3/4	1/1	1/2	3/4	1/1	[kgm²]	[Nm]
3 x 380-415	4.9	4	2	2925	DOL	8.7 - 8.5	68	79.2	82.4	83.3	0.68	0.78	0.84	0.0127	54

* Low voltage - high voltage.

Pump data

Impeller type	Max. solids size	Max. number of starts per hour	Max. installation depth	Enclosure class	Insulation class	Max. liquid temperature	pH
	[mm]		[m]			[°C]	
SuperVortex	80	20	20	IP68	F	40	See page 29

SEV.80.100.60.(Ex).2

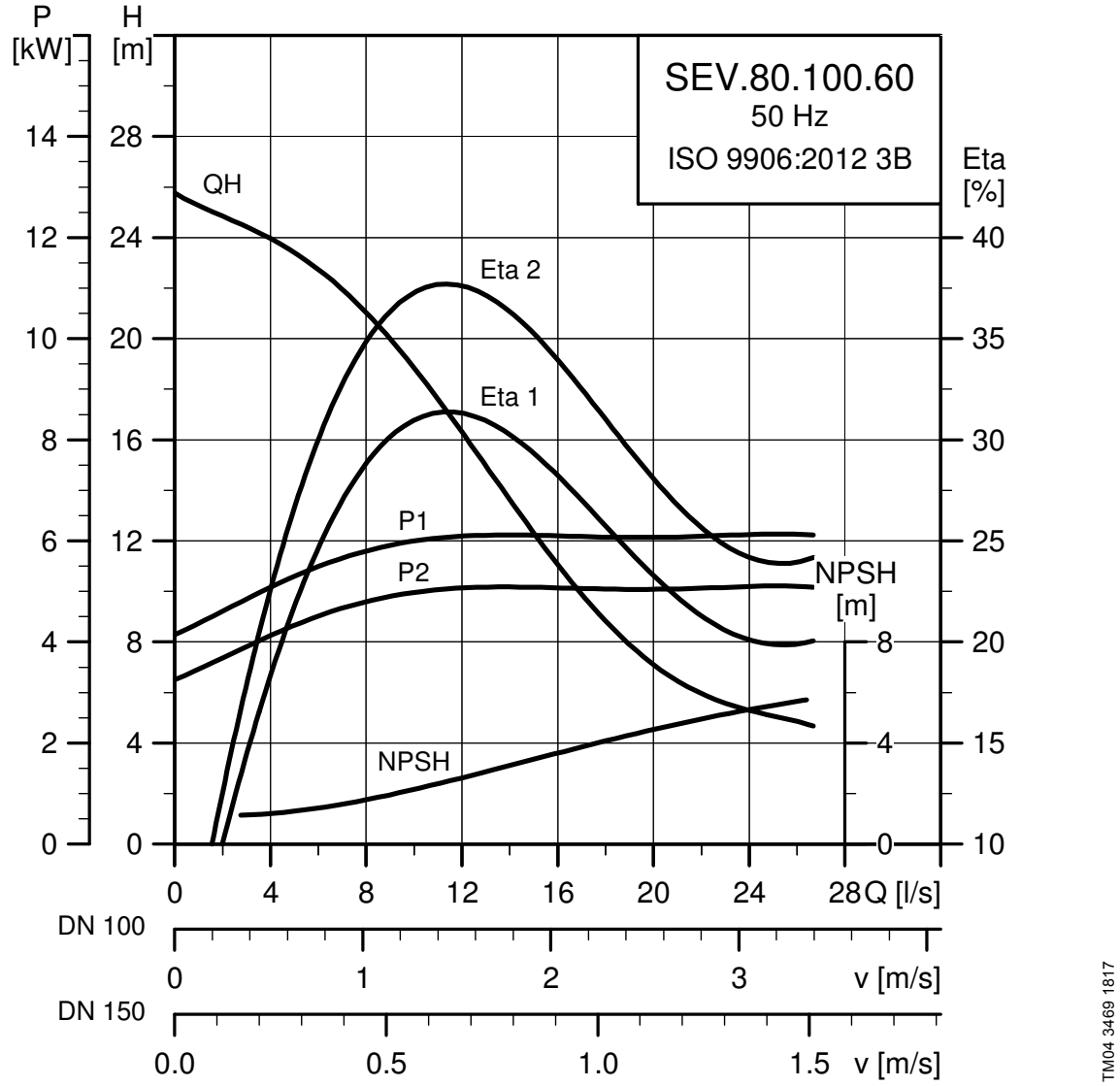

Electrical data

Voltage	P1	P2	Number of poles	Rpm	Starting method	I_N*	I_{start}	η_{motor} [%]			Cos φ			Moment of inertia	Breakdown torque $M_{max.}$
[V]	[kW]	[kW]				[A]	[A]	1/2	3/4	1/1	1/2	3/4	1/1	[kgm²]	[Nm]
3 x 380-415	7.1	6	2	2945	DOL	13.7 - 14.2	143	77.5	82.2	84.1	0.58	0.7	0.78	0.019	112

* Low voltage - high voltage.

Pump data

Impeller type	Max. solids size	Max. number of starts per hour	Max. installation depth	Enclosure class	Insulation class	Max. liquid temperature	pH
	[mm]		[m]			[°C]	
SuperVortex	80	20	20	IP68	F	40	See page 29

SEV.80.100.75.(Ex).2

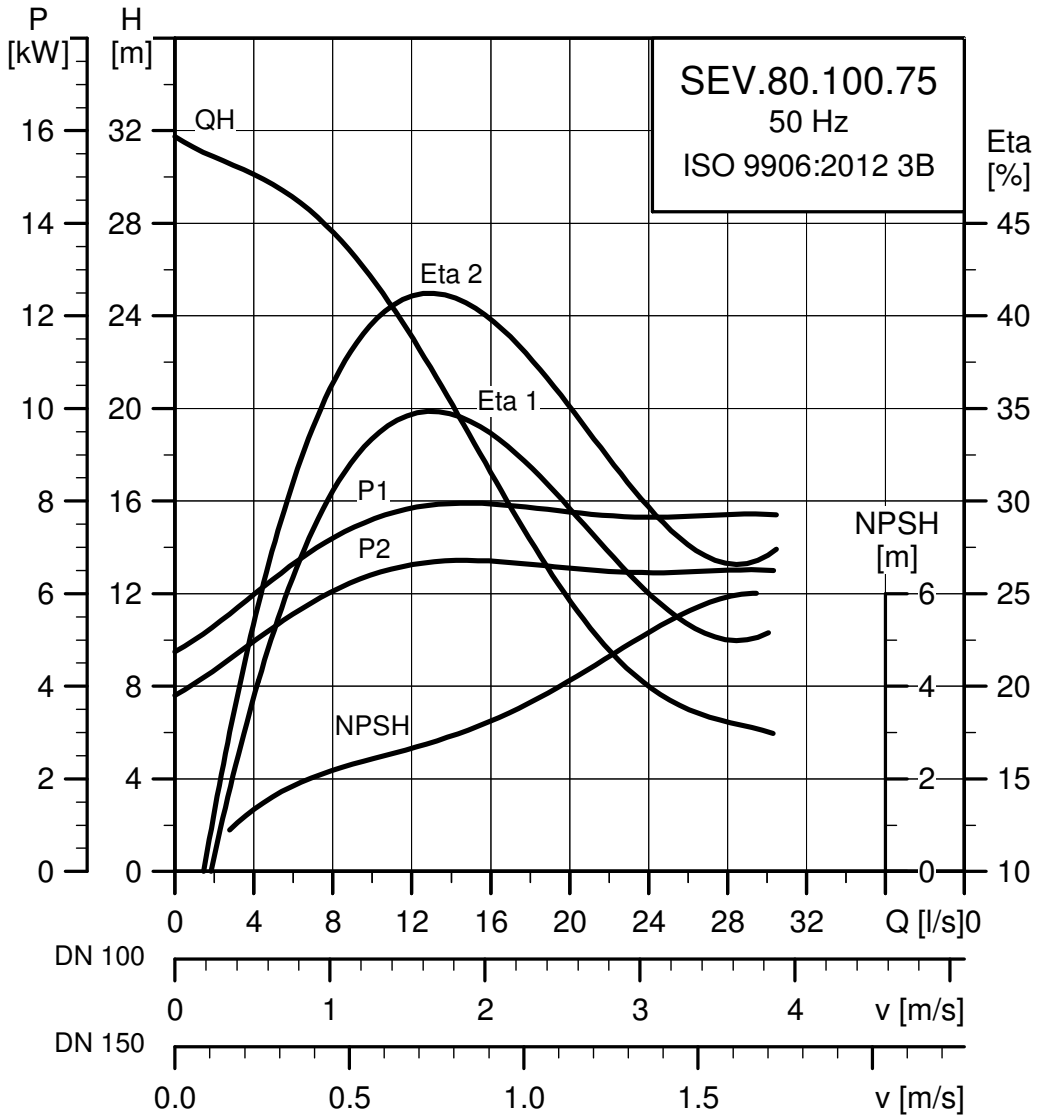

TM04 3470 1817

Electrical data

Voltage	P1	P2	Number of poles	Rpm	Starting method	I_N*	I_{start}	η_{motor} [%]			Cos φ			Moment of inertia	Breakdown torque $M_{max.}$
[V]	[kW]	[kW]				[A]	[A]	1/2	3/4	1/1	1/2	3/4	1/1	[kgm²]	[Nm]
3 x 380-415	8.9	7.5	2	2940	DOL	16.5 - 16.2	146	80.1	83.8	84.8	0.65	0.76	0.83	0.0215	112

* Low voltage - high voltage.

Pump data

Impeller type	Max. solids size	Max. number of starts per hour	Max. installation depth	Enclosure class	Insulation class	Max. liquid temperature	pH
	[mm]		[m]			[°C]	
SuperVortex	80	20	20	IP68	F	40	See page 29

SEV.80.100.92.(Ex).2

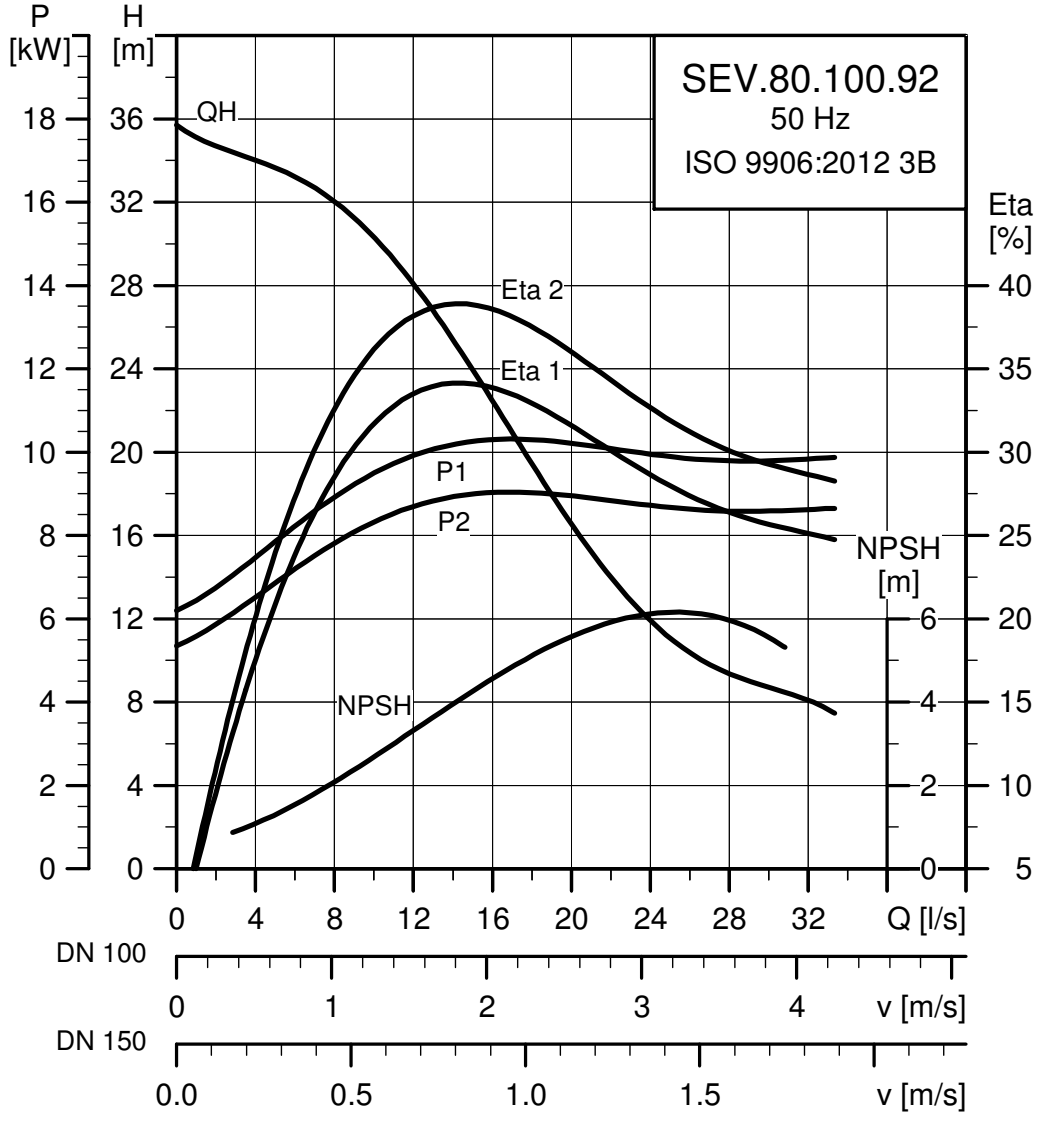

Electrical data

Voltage	P1	P2	Number of poles	Rpm	Starting method	I_N*	I_{start}	η_{motor} [%]			Cos φ			Moment of inertia	Breakdown torque $M_{max.}$
[V]	[kW]	[kW]				[A]	[A]	1/2	3/4	1/1	1/2	3/4	1/1	[kgm²]	[Nm]
3 x 380-415	10.5	9.2	2	2935	DOL	18.8 - 17.5	156	85.4	87.4	87.6	0.78	0.85	0.89	0.0334	99

* Low voltage - high voltage.

Pump data

Impeller type	Max. solids size	Max. number of starts per hour	Max. installation depth	Enclosure class	Insulation class	Max. liquid temperature	pH
	[mm]		[m]			[°C]	
SuperVortex	80	20	20	IP68	F	40	See page 29

SEV.80.100.110.(Ex).2

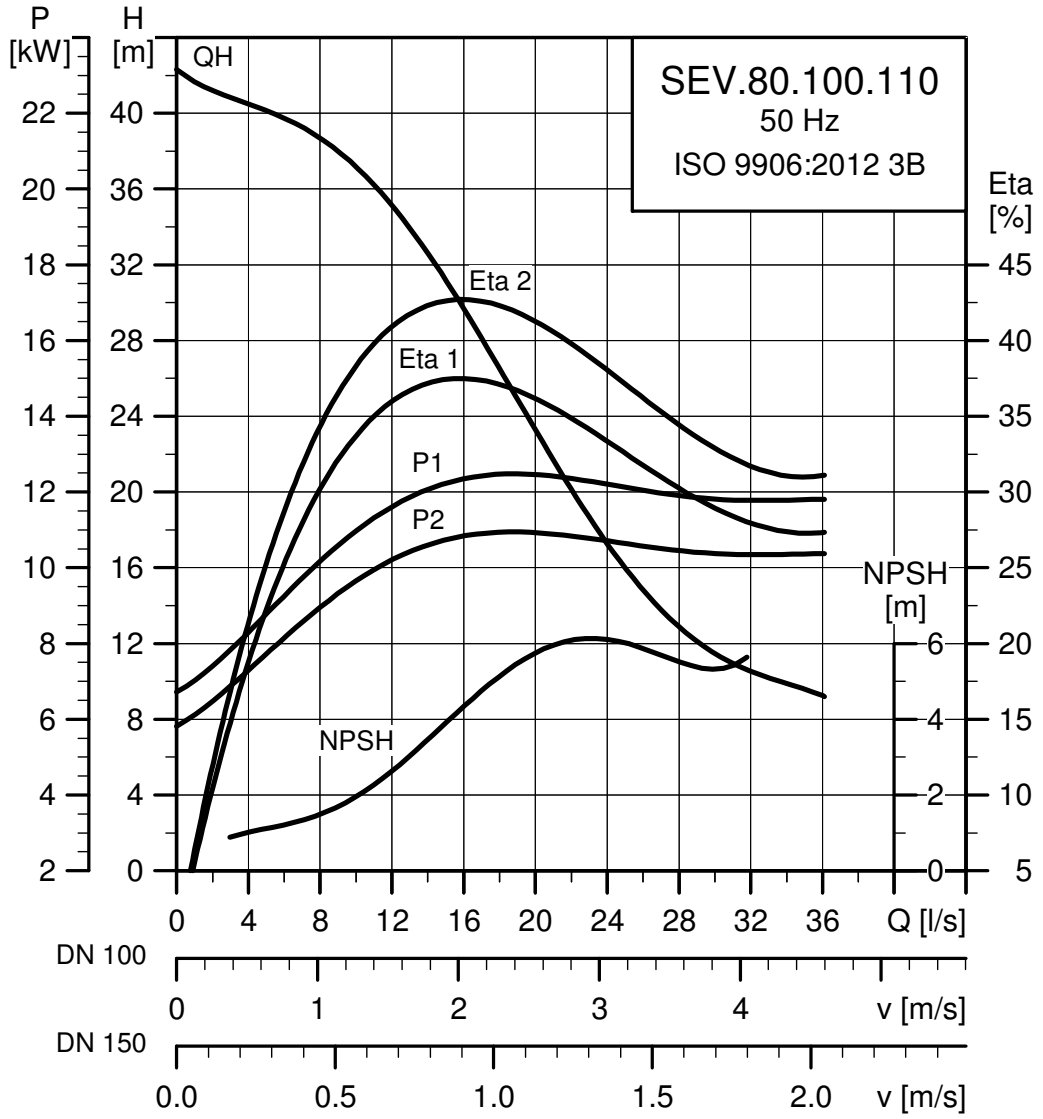

Electrical data

Voltage	P1	P2	Number of poles	Rpm	Starting method	I_N*	I_{start}	η_{motor} [%]			Cos φ			Moment of inertia	Breakdown torque $M_{max.}$
[V]	[kW]	[kW]				[A]	[A]	1/2	3/4	1/1	1/2	3/4	1/1	[kgm²]	[Nm]
3 x 380-415	12.6	11	2	2935	DOL	22.7 - 21.4	155	86.4	88.1	87.7	0.75	0.84	0.88	0.0368	118

* Low voltage - high voltage.

Pump data

Impeller type	Max. solids size	Max. number of starts per hour	Max. installation depth	Enclosure class	Insulation class	Max. liquid temperature	pH
	[mm]		[m]			[°C]	
SuperVortex	80	20	20	IP68	F	40	See page 29

SEV.100.100.30.(Ex).4

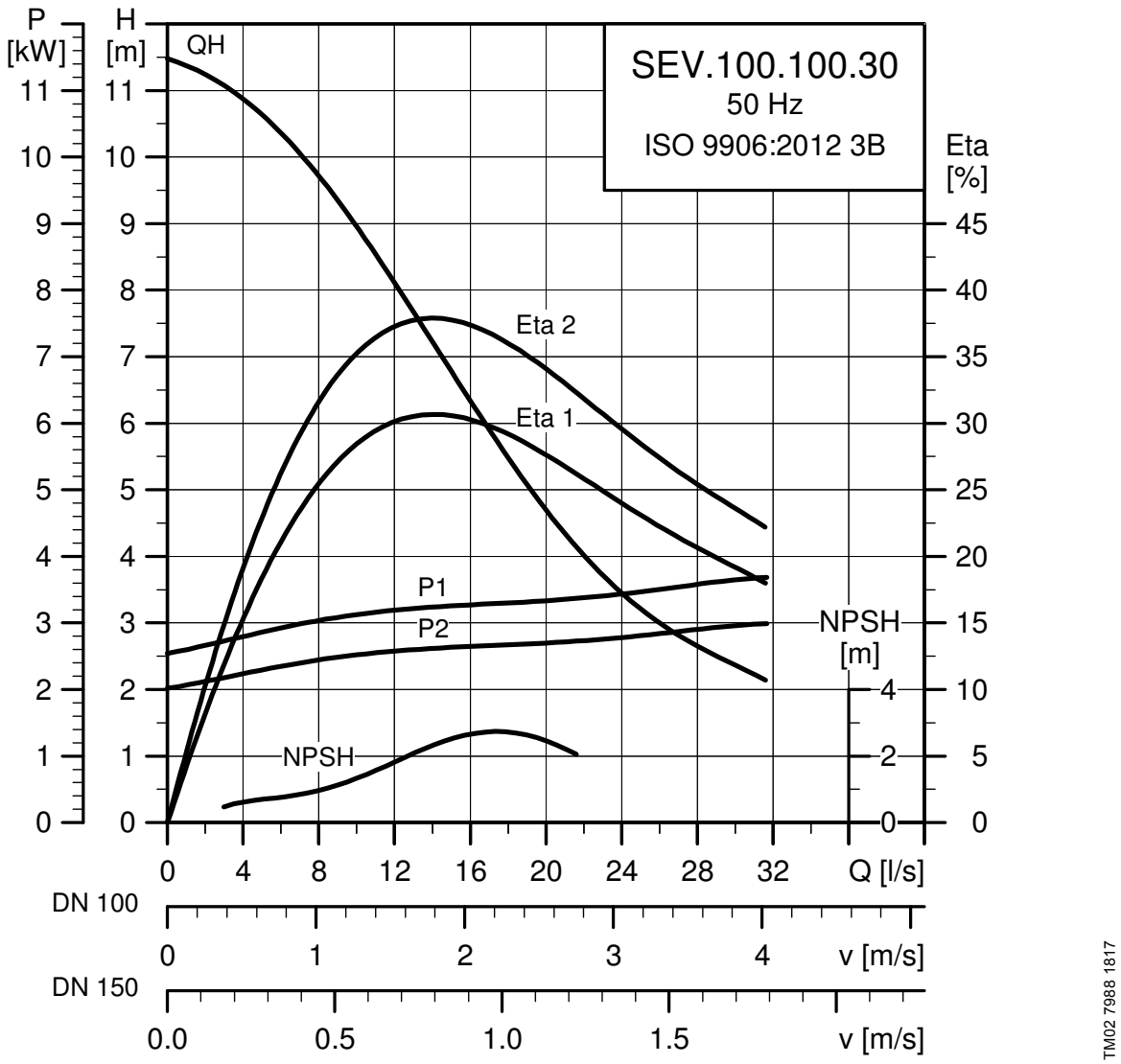

Electrical data

Voltage	P1	P2	Number of poles	Rpm	Starting method	I_N*	I_{start}	η_{motor} [%]			Cos φ			Moment of inertia	Breakdown torque $M_{max.}$
[V]	[kW]	[kW]				[A]	[A]	1/2	3/4	1/1	1/2	3/4	1/1	[kgm²]	[Nm]
3 x 380-415	3.7	3.0	4	1455	DOL	7.8 - 8.0	74	76.4	79.9	81.2	0.5	0.64	0.73	0.0450	71

* Low voltage - high voltage.

Pump data

Impeller type	Max. solids size	Max. number of starts per hour	Max. installation depth	Enclosure class	Insulation class	Max. liquid temperature	pH
	[mm]		[m]			[°C]	
SuperVortex	100	20	20	IP68	F	40	See page 29

SEV.100.100.40.(Ex).4

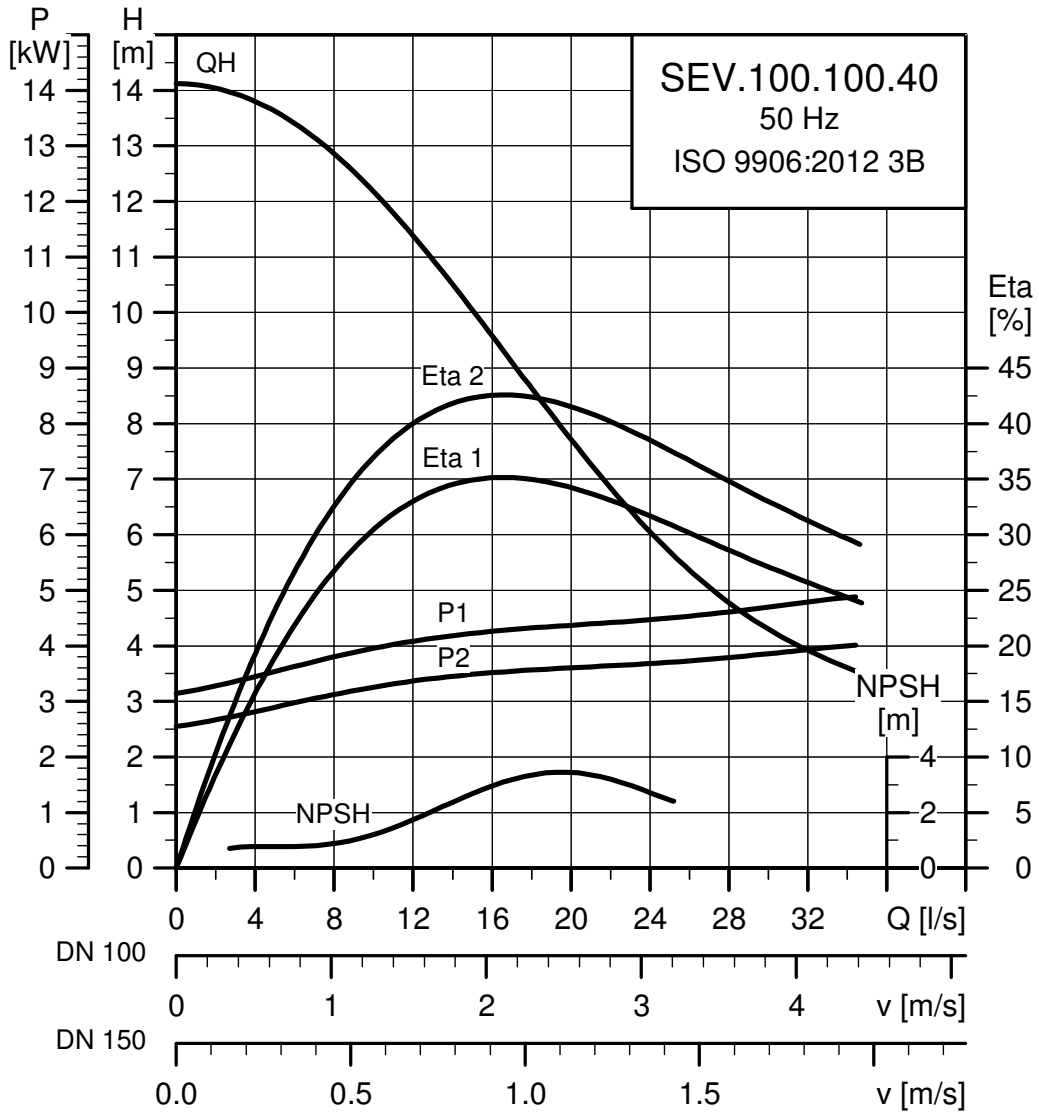

Electrical data

Voltage	P1	P2	Number of poles	Rpm	Starting method	I_N*	I_{start}	η_{motor} [%]			Cos φ			Moment of inertia	Breakdown torque $M_{max.}$
[V]	[kW]	[kW]				[A]	[A]	1/2	3/4	1/1	1/2	3/4	1/1	[kgm²]	[Nm]
3 x 380-415	4.9	4.0	4	1460	Y/D	10.0 - 10.2	67	78.2	81.7	82.2	0.52	0.65	0.73	0.0501	100

* Low voltage - high voltage.

Pump data

Impeller type	Max. solids size	Max. number of starts per hour	Max. installation depth	Enclosure class	Insulation class	Max. liquid temperature	pH
	[mm]		[m]			[°C]	
SuperVortex	100	20	20	IP68	F	40	See page 29

SEV.100.100.55.(Ex).4

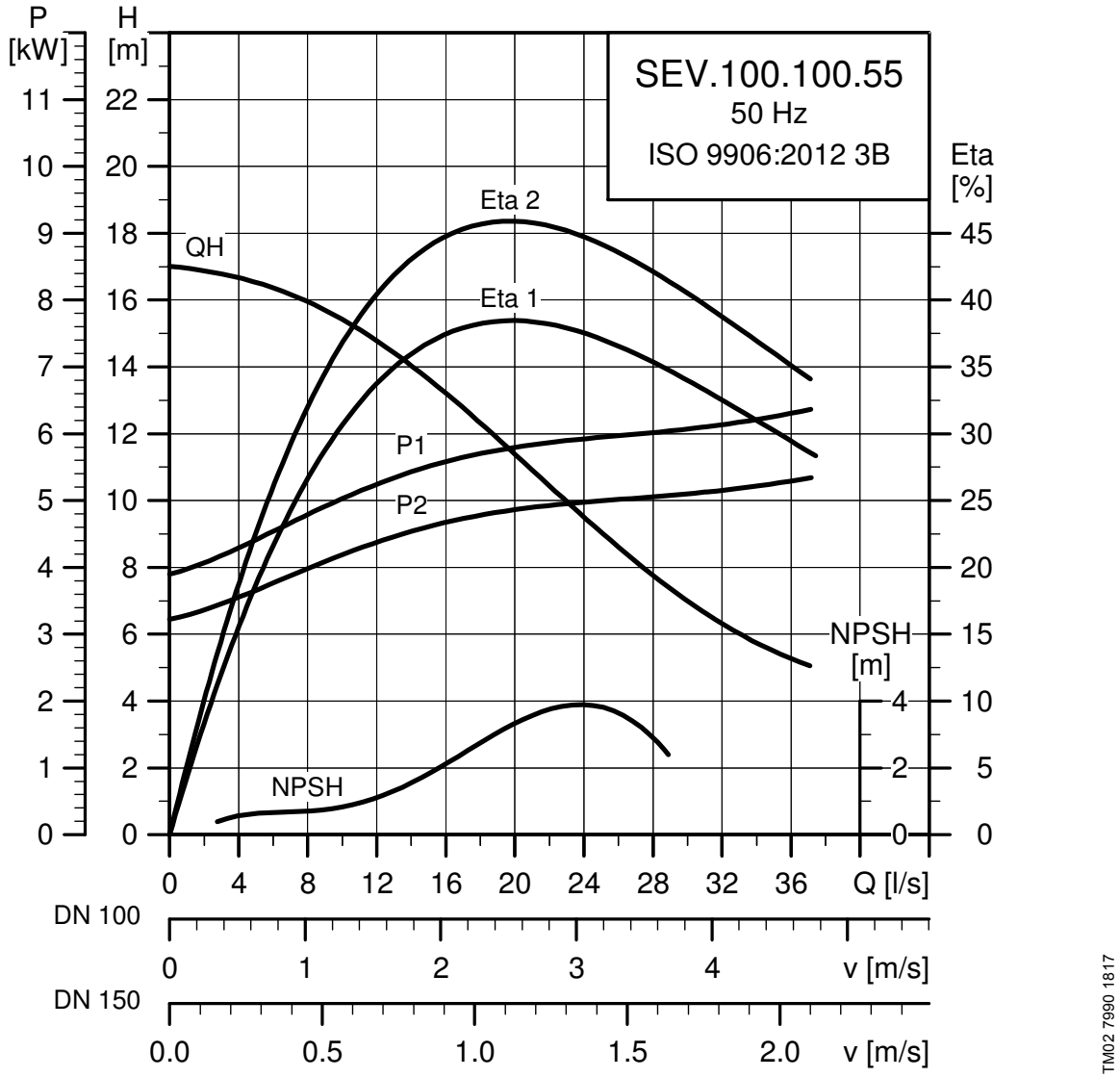

Electrical data

Voltage	P1	P2	Number of poles	Rpm	Starting method	I_N*	I_{start}	η_{motor} [%]			Cos φ			Moment of inertia	Breakdown torque $M_{max.}$
[V]	[kW]	[kW]				[A]	[A]	1/2	3/4	1/1	1/2	3/4	1/1	[kgm²]	[Nm]
3 x 380-415	6.5	5.5	4	1455	Y/D	13.3 - 13.8	87	81	83.3	83.9	0.52	0.65	0.74	0.0552	122

* Low voltage - high voltage.

Pump data

Impeller type	Max. solids size	Max. number of starts per hour	Max. installation depth	Enclosure class	Insulation class	Max. liquid temperature	pH
	[mm]		[m]			[°C]	
SuperVortex	100	20	20	IP68	F	40	See page 29

SEV.100.100.75.(Ex).4

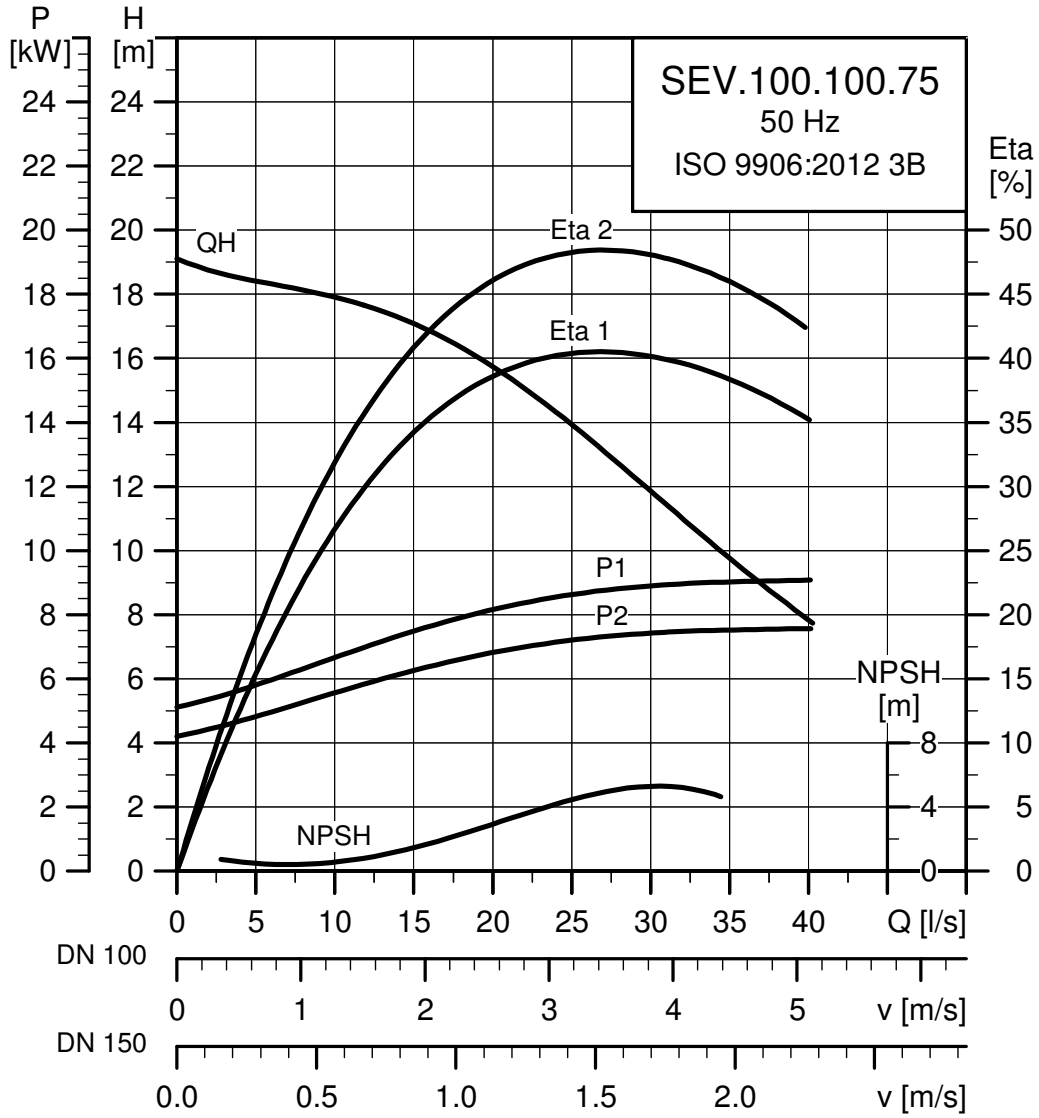

Electrical data

Voltage	P1	P2	Number of poles	Rpm	Starting method	I_N*	I_{start}	η_{motor} [%]			Cos φ			Moment of inertia	Breakdown torque $M_{max.}$
[V]	[kW]	[kW]				[A]	[A]	1/2	3/4	1/1	1/2	3/4	1/1	[kgm²]	[Nm]
3 x 380-415	9.0	7.5	4	1455	Y/D	17.7 - 17.5	107	81.3	83.5	83.4	0.61	0.72	0.79	0.0692	141

Pump data

Impeller type	Max. solids size	Max. number of starts per hour	Max. installation depth	Enclosure class	Insulation class	Max. liquid temperature	pH
	[mm]		[m]			[°C]	
SuperVortex	100	20	20	IP68	F	40	See page 29

11. Accessories

Installation systems

Picture	Description	Dimensions	Material	SE1.50.65	SE1.50.80	SE1.80.80	SE1.80.100	SE1.100.100	SE1.100.150	SEV.65.65	SEV.65.80	SEV.80.80	SEV.80.100	SEV.100.100	Product number
 TM04 4490 1409	Complete auto-coupling system, including guide claw, base plate and upper guide rail bracket. Cast iron, epoxy-coated. With bolts, nuts, gaskets and anchor bolts. **Note:** If your guide rails exceed 4 metres, consider using intermediate guide rail brackets to support your system.	DN 65	Cast iron	●						●					96090992
		DN 80			●	●					●	●			96090993
		DN 80 / DN 65		●						●					96102238
		DN 100					●	●					●	●	96090994
		DN 100 / DN 80			●	●					●	●			96102240
		DN 150							●						96090995
		DN 150 / DN 100					●	●					●	●	96102241
		DN 65	Stainless steel, EN 1.4408	●						●					96825104
		DN 80			●	●					●	●			96825106
		DN 100					●	●					●	●	96825108
		DN 150							●						96945381
 TM05 4253 2112	Intermediate guide rail brackets in stainless steel.	DN 65	Stainless steel	●						●					96825119
		DN 80				●					●	●			96825142
		DN 100					●	●					●	●	96825161
		DN 150							●						96887674
 TM04 6086 4809	Ring stand with flanged 90 ° elbow and hose connection. With bolts, nuts, gaskets and anchor bolts.	DN 65 / DN 65	Cast iron, epoxy-coated	●											96102253
		DN 65 / DN 80			●										96102378
		DN 80 / DN 65								●					96102439
		DN 80 / DN 80									●	●			96102254
		DN 100 / DN 80				●									96102313
		DN 80 / DN 100											●		96943236
		DN 100 / DN 100					●							●	96102255
		DN 150 / DN 100	Galvanised steel					●							96102314
		DN 150 / DN 150							●						96102256
	Ring stand with flanged 90 ° elbow and outside thread connection. With bolts, nuts, gaskets and anchor bolts.	DN 65 / DN 65	Cast iron, epoxy-coated	●											96102379
		DN 65 / DN 80			●										96102380
		DN 80 / DN 65								●					96102440
		DN 80 / DN 80									●	●			96102381
		DN 100 / DN 80				●									96102382
		DN 80 / DN 100											●		96943236
		DN 100 / DN 100					●							●	96102383
		DN 150 / DN 100	Galvanised steel					●							96102384
		DN 150 / DN 150							●						96102385
 TM04 4493 1409	Base stand for vertical dry installation, including 90 ° elbow. Galvanised steel. With bolts, gaskets and anchor bolts.	DN 65	Stainless steel EN 1.4408	●	●										96102257
		DN 80								●	●	●	●		96102258
		DN 100 / DN 80								●	●	●	●		96567174
		DN 100				●	●							●	96102259
		DN 150 / DN 100				●	●								96567175
		DN 150						●	●						96102260
		DN 200 / DN 150						●	●						96567176

Picture	Description	Dimensions	Material	SE1.50.65	SE1.50.80	SE1.80.80	SE1.80.100	SE1.100.100	SE1.100.150	SEV.65.65	SEV.65.80	SEV.80.80	SEV.80.100	SEV.100.100	Product number
 TM04 4494 1409	Brackets for horizontal dry installation. With bolts, gaskets and anchor bolts.	DN 65 (2.2 to 3 kW, 2-pole)	Galvanised steel	•	•										96102261
		DN 65 (4 kW, 2-pole)		•	•										96102262
		DN 80 (2.2 to 3 kW, 2-pole)								•	•				96101912
		DN 80 (1.1 to 2.2 kW, 4-pole)										•	•		96101912
		DN 80 (4 to 7.5 kW, 2-pole)								•	•	•	•		96102200
		DN 80 (4 kW, 4-pole)										•	•		96102200
		DN 80 (9.2 to 11 kW, 2-pole)										•	•		96102386
 TM04 4506 1409		DN 100 (1.5 to 2.2 kW, 4-pole)				•	•								96102201
		DN 100 (3 to 5.5 kW, 4-pole)				•	•							•	96101917
		DN 100 (7.5 kW, 4-pole)				•	•							•	96102202
		DN 150 (4 to 5.5 kW, 4-pole)						•	•						96102263
		DN 150 (7.5 kW, 4-pole)						•	•						96102250

Picture	Description	Dimensions and weights	Product number
 TM02 6126 5102	4 m galvanised lifting chain with lifting link and safety hook. With certificates.	800 kg	96735550
	6 m galvanised lifting chain with lifting link and safety hook. With certificates.		96735553
	8 m galvanised lifting chain with lifting link and safety hook. With certificates.		96735554
	10 m galvanised lifting chain with lifting link and safety hook. With certificates.		96735556
	12 m galvanised lifting chain with lifting link and safety hook. With certificates.		96735557
	4 m stainless steel lifting chain with lifting link and safety hook. With certificates.	800 kg	96735559
	6 m stainless steel lifting chain with lifting link and safety hook. With certificates.		96735564
	8 m stainless steel lifting chain with lifting link and safety hook. With certificates.		96735566
	10 m stainless steel lifting chain with lifting link and safety hook. With certificates.		96735567
	12 m stainless steel lifting chain with lifting link and safety hook. With certificates.		96735569
	Cable protection hose in polyolefin material.	5 m x 1"	96002084

12. Dimensions and weights

Dimensions

Pumps without accessories

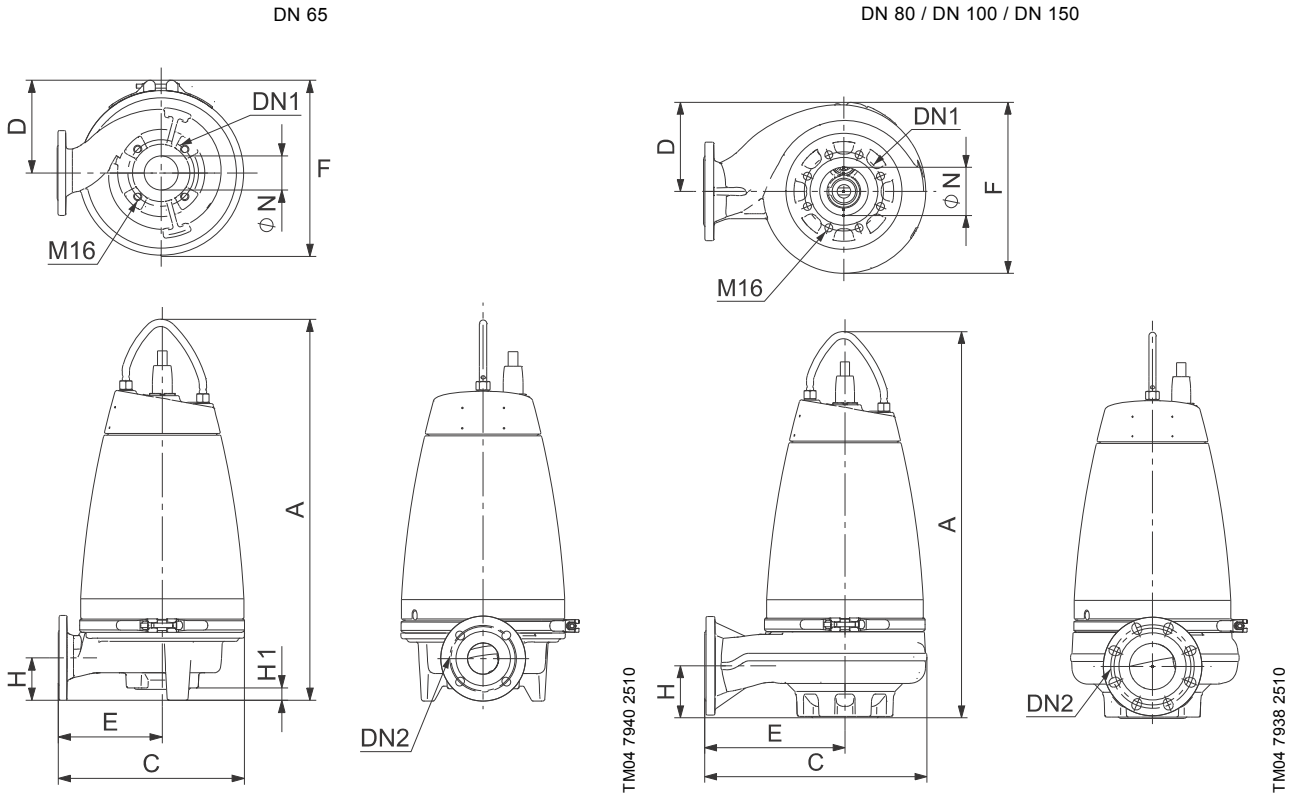

Fig. 27 SE1

SE1.50, DN 65 or DN 80 outlet

Pump type	A	C	D	E	F	H	H1	ØN	DN1	DN2
SE1.50.65.22.2	753	366	171	216	321	93	26	50	65	65
SE1.50.65.30.2	753	366	171	216	321	93	26	50	65	65
SE1.50.65.40.2	831	407	200	227	379	93	24	50	65	65
SE1.50.80.22.2	760	366	171	216	321	100	33	50	65	80
SE1.50.80.30.2	760	366	171	216	321	100	33	50	65	80
SE1.50.80.40.2	838	407	200	227	379	100	31	50	65	80

SE1.80, DN 80 outlet

Pump type	A	C	D	E	F	H	H1	ØN	DN1	DN2
SE1.80.80.15.4	776	435	171	272	347	100	8	80	100	80
SE1.80.80.22.4	776	435	171	272	347	100	8	80	100	80
SE1.80.80.30.4	878	505	200	319	397	118	0	80	100	80
SE1.80.80.40.4	878	505	200	319	397	118	0	80	100	80
SE1.80.80.55.4	878	505	200	319	397	118	0	80	100	80
SE1.80.80.75.4	924	530	217	328	423	118	0	80	100	80

SE1.80, DN 100 outlet

Pump type	A	C	D	E	F	H	H1	ØN	DN1	DN2
SE1.80.100.15.4	788	435	171	272	347	112	20	80	100	100
SE1.80.100.22.4	788	435	171	272	347	112	20	80	100	100
SE1.80.100.30.4	878	505	200	319	397	118	0	80	100	100
SE1.80.100.40.4	878	505	200	319	397	118	0	80	100	100
SE1.80.100.55.4	878	505	200	319	397	118	0	80	100	100
SE1.80.100.75.4	924	530	217	328	423	118	0	80	100	100

SE1.100, DN 100 or DN 150 outlet

Pump type	A	C	D	E	F	H	H1	ØN	DN1	DN2
SE1.100.100.40.4	885	541	200	320	438	115	0	100	150	100
SE1.100.100.55.4	885	541	200	320	438	115	0	100	150	100
SE1.100.100.75.4	932	541	217	312	462	115	0	100	150	100
SE1.100.150.40.4	900	541	200	320	440	143	32	100	150	150
SE1.100.150.55.4	900	541	200	320	440	143	32	100	150	150
SE1.100.150.75.4	948	541	217	306	472	143	32	100	150	150

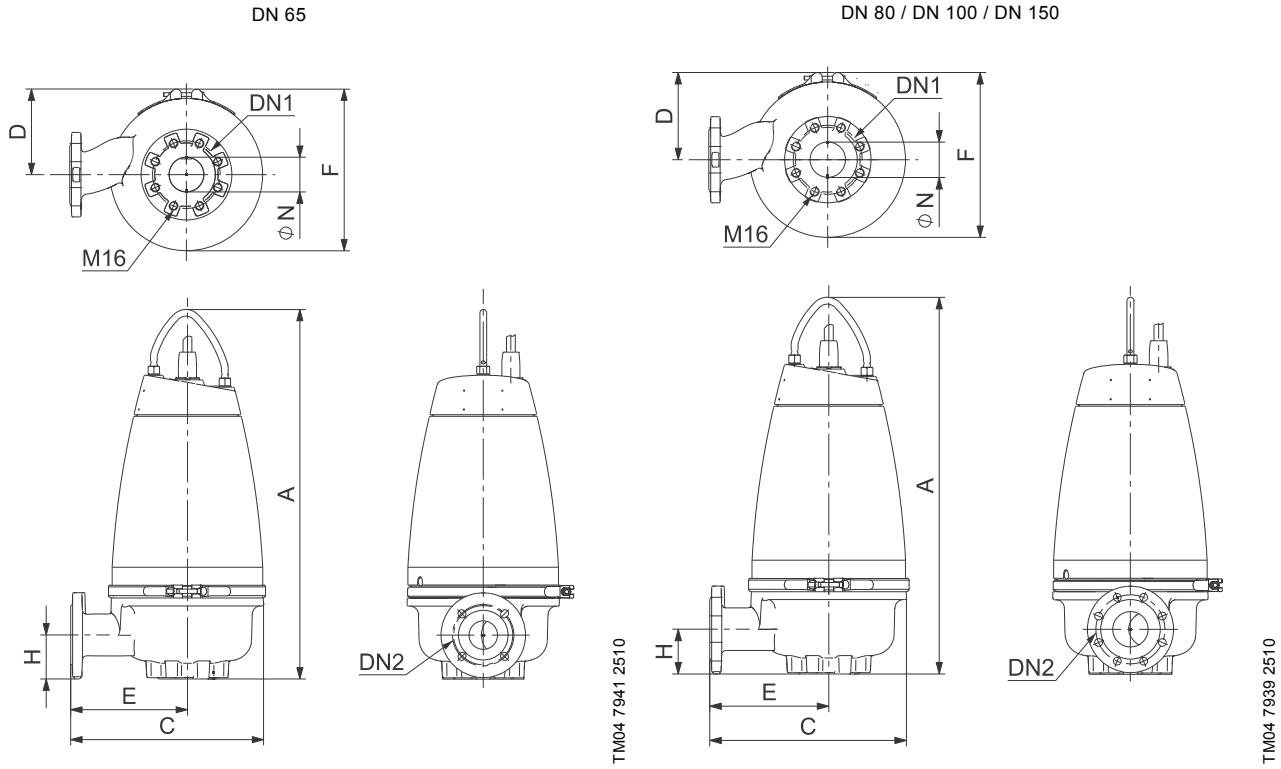

Fig. 28 SEV

SEV.65, DN 65 or DN 80 outlet

Pump type	A	C	D	E	F	H	H1	ØN	DN1	DN2
SEV.65.65.22.2	771	396	171	246	321	102	0	65	80	65
SEV.65.65.30.2	771	396	171	246	321	102	0	65	80	65
SEV.65.65.40.2	848	456	200	276	380	106	0	65	80	65
SEV.65.80.22.2	771	397	171	247	321	103	0	65	80	80
SEV.65.80.30.2	771	397	171	247	321	103	0	65	80	80
SEV.65.80.40.2	848	455	200	276	379	106	0	65	80	80

SEV.80, DN 80 outlet

Pump type	A	C	D	E	F	H	H1	ØN	DN1	DN2
SEV.80.80.11.4	798	409	171	241	339	109	0	80	80	80
SEV.80.80.13.4	798	409	171	241	339	109	0	80	80	80
SEV.80.80.15.4	798	409	171	241	339	109	0	80	80	80
SEV.80.80.22.4	798	409	171	241	339	109	0	80	80	80
SEV.80.80.40.2	874	456	200	276	380	104	0	80	80	80
SEV.80.80.60.2	874	456	200	276	380	104	0	80	80	80
SEV.80.80.75.2	874	456	200	276	380	104	0	80	80	80
SEV.80.80.92.2	922	489	217	293	413	123	0	80	80	80
SEV.80.80.110.2	922	489	217	293	413	123	0	80	80	80

SEV.80, DN 100 outlet

Pump type	A	C	D	E	F	H	H1	ØN	DN1	DN2
SEV.80.100.11.4	798	409	171	241	339	109	0	80	80	100
SEV.80.100.13.4	798	409	171	241	339	109	0	80	80	100
SEV.80.100.15.4	798	409	171	241	339	109	0	80	80	100
SEV.80.100.22.4	798	409	171	241	339	109	0	80	80	100
SEV.80.100.40.2	874	466	200	286	380	104	0	80	80	100
SEV.80.100.60.2	874	466	200	286	380	104	0	80	80	100
SEV.80.100.75.2	874	466	200	286	380	104	0	80	80	100
SEV.80.100.92.2	922	499	217	303	413	123	0	80	80	100
SEV.80.100.110.2	922	499	217	303	413	123	0	80	80	100

SEV.100, DN 100 outlet

Pump type	A	C	D	E	F	H	H1	ØN	DN1	DN2
SEV.100.100.30.4	889	457	200	277	380	134	0	100	100	100
SEV.100.100.40.4	889	457	200	277	380	134	0	100	100	100
SEV.100.100.55.4	889	457	200	277	380	134	0	100	100	100
SEV.100.100.75.4	948	490	217	294	413	145	0	100	100	100

Free-standing submerged pump on ring stand

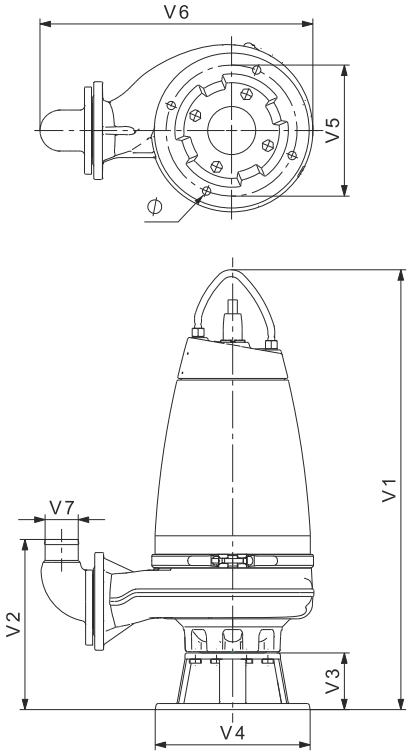

Fig. 29 SE1

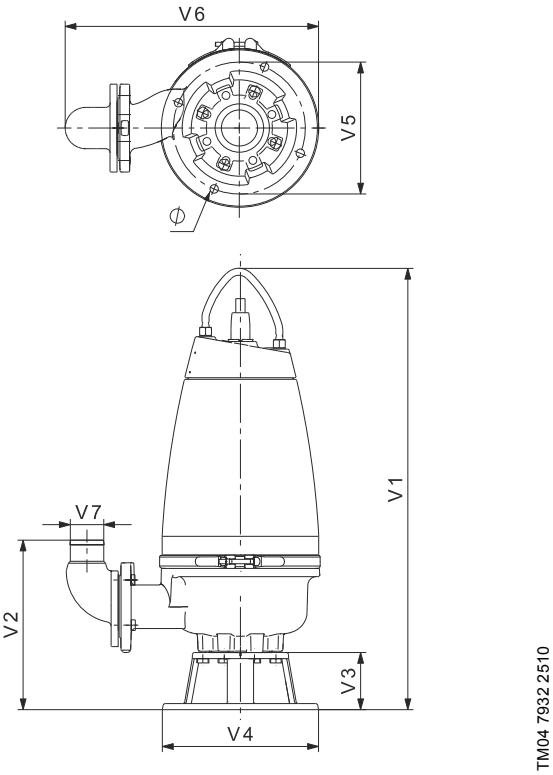

Fig. 30 SEV

SE1.50, DN 65 and DN 80 outlet

Pump type	V1	V2	V3	V4	V5	V6	V7	⌀
SE1.50.65.22.2	857	339	130	325	270	491	65	18
SE1.50.65.30.2	857	339	130	325	270	491	65	18
SE1.50.65.40.2	937	341	130	325	270	519	65	18
SE1.50.80.22.2	857	339	130	325	270	496	80	18
SE1.50.80.30.2	857	339	130	325	270	496	80	18
SE1.50.80.40.2	937	341	130	325	270	525	80	18

SE1.80, DN 80 outlet

Pump type	V1	V2	V3	V4	V5	V6	V7	⌀
SE1.80.80.15.4	898	364	130	355	300	567	80	19
SE1.80.80.22.4	898	364	130	355	300	567	80	19
SE1.80.80.30.4	1008	390	130	355	300	623	80	19
SE1.80.80.40.4	1008	390	130	355	300	623	80	19
SE1.80.80.55.4	1008	390	130	355	300	623	80	19
SE1.80.80.75.4	1054	390	130	355	300	648	80	19

SE1.80, DN 100 outlet

Pump type	V1	V2	V3	V4	V5	V6	V7	Ø
SE1.80.100.15.4	898	369	130	355	300	591	100	19
SE1.80.100.22.4	898	369	130	355	300	591	100	19
SE1.80.100.30.4	1008	395	130	355	300	647	100	19
SE1.80.100.40.4	1008	395	130	355	300	647	100	19
SE1.80.100.55.4	1008	395	130	355	300	647	100	19
SE1.80.100.75.4	1054	395	130	355	300	672	100	19

SE1.100, DN 100 or DN 150 outlet

Pump type	V1	V2	V3	V4	V5	V6	V7	Ø
SE1.100.100.40.4	1071	445	186	450	400	711	100	22
SE1.100.100.55.4	1071	445	186	450	400	711	100	22
SE1.100.100.75.4	1118	445	186	450	400	706	100	22
SE1.100.150.40.4	1054	555	186	450	400	807	150	22
SE1.100.150.55.4	1054	555	186	450	400	807	150	22
SE1.100.150.75.4	1102	555	186	450	400	803	150	22

SEV.65, DN 65 or DN 80 outlet

Pump type	V1	V2	V3	V4	V5	V6	V7	Ø
SEV.65.65.22.2	899	372	128	330	280	524	65	18
SEV.65.65.30.2	899	372	128	330	280	524	65	18
SEV.65.65.40.2	976	376	128	330	280	568	65	18
SEV.65.80.22.2	899	373	128	330	280	530	80	18
SEV.65.80.30.2	899	373	128	330	280	530	80	18
SEV.65.80.40.2	976	376	128	330	280	573	80	18

SEV.80, DN 80 outlet

Pump type	V1	V2	V3	V4	V5	V6	V7	Ø
SEV.80.80.11.4	926	379	128	330	280	527	80	18
SEV.80.80.13.4	926	379	128	330	280	527	80	18
SEV.80.80.15.4	926	379	128	330	280	527	80	18
SEV.80.80.22.4	926	379	128	330	280	527	80	18
SEV.80.80.40.2	1002	374	128	330	280	574	80	18
SEV.80.80.60.2	1002	374	128	330	280	574	80	18
SEV.80.80.75.2	1002	374	128	330	280	574	80	18
SEV.80.80.92.2	1050	393	128	330	280	607	80	18

SEV.80, DN 100 outlet

Pump type	V1	V2	V3	V4	V5	V6	V7	Ø
SEV.80.100.11.4	926	379	128	330	280	551	100	19
SEV.80.100.13.4	926	379	128	330	280	551	100	19
SEV.80.100.15.4	926	379	128	330	280	551	100	19
SEV.80.100.22.4	926	379	128	330	280	551	100	19
SEV.80.100.40.2	1002	379	128	330	280	608	100	19
SEV.80.100.60.2	1002	379	128	330	280	608	100	19
SEV.80.100.75.2	1002	379	128	330	280	608	100	19
SEV.80.100.92.2	1050	398	128	330	280	641	100	19
SEV.80.100.110.2	1050	398	128	330	280	641	100	19
SEV.80.100.92.2	1050	398	128	330	280	641	100	19
SEV.80.100.110.2	1050	398	128	330	280	641	100	19

SEV.100, DN 100 outlet

Pump type	V1	V2	V3	V4	V5	V6	V7	Ø
SEV.100.100.30.4	1019	411	130	355	300	599	100	19
SEV.100.100.40.4	1019	411	130	355	300	599	100	19
SEV.100.100.55.4	1019	411	130	355	300	599	100	19
SEV.100.100.75.4	1078	422	130	355	300	632	100	19

Submerged pump on auto coupling

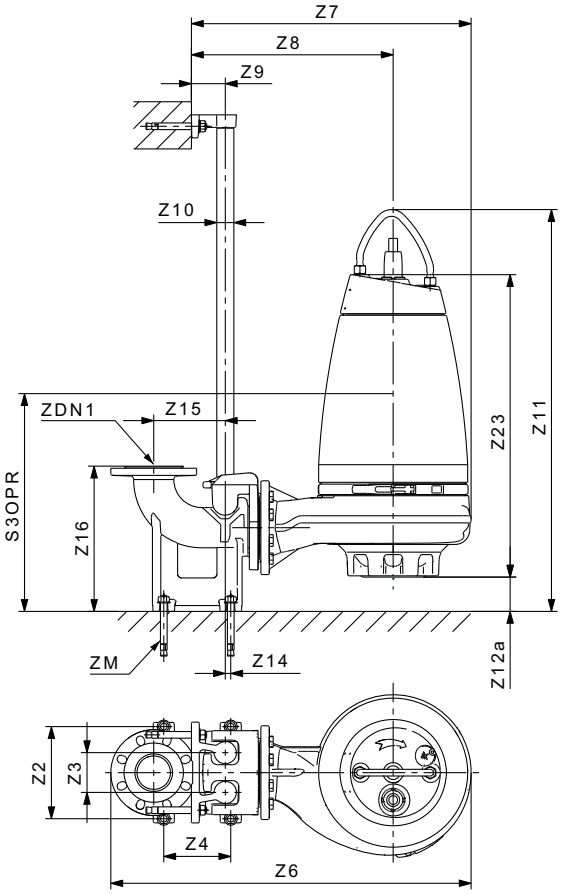

TM04 7931 1317

Fig. 31 SE1

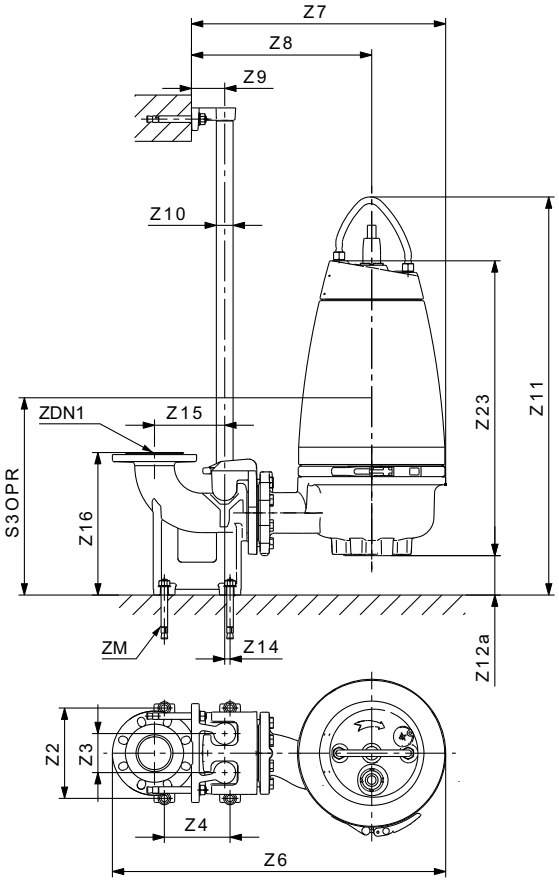

TM04 7935 1317

Fig. 32 SEV

SE1.50, DN 65 or DN 80 outlet

Pump type	Z2	Z3	Z4	Z6	Z7	Z8	Z9	Z10	Z11	Z12a	Z14	Z15	Z16	Z23	ZM	ZDN1	S3OPR
SE1.50.65.22.2	210	95	140	700	513	363	81	1 1/2"	826	99	1	175	266	608	M16	65	236
SE1.50.65.30.2	210	95	140	700	513	363	81	1 1/2"	826	99	1	175	266	608	M16	65	236
SE1.50.65.40.2	210	95	140	741	554	375	81	1 1/2"	904	97	1	175	266	664	M16	65	235
SE1.50.80.22.2	220	95	160	719	526	376	81	1 1/2"	860	133	13	171	345	608	M16	80	270
SE1.50.80.30.2	220	95	160	719	526	376	81	1 1/2"	860	133	13	171	345	608	M16	80	270
SE1.50.80.40.2	220	95	160	760	567	387	81	1 1/2"	938	132	13	171	345	663	M16	80	269

SE1.80, DN 80 outlet

Pump type	Z2	Z3	Z4	Z6	Z7	Z8	Z9	Z10	Z11	Z12a	Z14	Z15	Z16	Z23	ZM	ZDN1	S3OPR
SE1.80.80.15.4	220	95	160	788	595	432	81	1 1/2"	876	108	13	171	345	649	M16	80	291
SE1.80.80.22.4	220	95	160	788	595	432	81	1 1/2"	876	108	13	171	345	649	M16	80	291
SE1.80.80.30.4	220	95	160	858	666	480	81	1 1/2"	960	82	13	171	345	735	M16	80	292
SE1.80.80.40.4	220	95	160	858	666	480	81	1 1/2"	960	82	13	171	345	735	M16	80	292
SE1.80.80.55.4	220	95	160	858	666	480	81	1 1/2"	960	82	13	171	345	735	M16	80	292
SE1.80.80.75.4	220	95	160	883	690	489	81	1 1/2"	1006	82	13	171	345	780	M16	80	293

SE1.80, DN 100 outlet

Pump type	Z2	Z3	Z4	Z6	Z7	Z8	Z9	Z10	Z11	Z12a	Z14	Z15	Z16	Z23	ZM	ZDN1	S3OPR
SE1.80.100.15.4	260	110	220	878	652	489	110	2"	916	148	0	220	413	649	M16	100	330
SE1.80.100.22.4	260	110	220	878	652	489	110	2"	916	148	0	220	413	649	M16	100	330
SE1.80.100.30.4	260	110	220	948	722	536	110	2"	1000	122	0	220	413	735	M16	100	335
SE1.80.100.40.4	260	110	220	948	722	536	110	2"	1000	122	0	220	413	735	M16	100	335
SE1.80.100.55.4	260	110	220	948	722	536	110	2"	1000	122	0	220	413	735	M16	100	335
SE1.80.100.75.4	260	110	220	972	747	545	110	2"	1046	122	0	220	413	790	M16	100	332

SE1.100, DN 100 or DN 150 outlet

Pump type	Z2	Z3	Z4	Z6	Z7	Z8	Z9	Z10	Z11	Z12a	Z14	Z15	Z16	Z23	ZM	ZDN1	S3OPR
SE1.100.100.40.4	260	110	220	983	758	537	110	2"	1009	125	0	220	413	741	M16	100	347
SE1.100.100.55.4	260	110	220	983	758	537	110	2"	1009	125	0	220	413	741	M16	100	347
SE1.100.100.75.4	260	110	220	983	758	529	110	2"	1057	125	0	220	413	788	M16	100	341
SE1.100.150.40.4	300	110	280	1093	780	559	110	2"	1033	164	0	280	450	726	M16	150	386
SE1.100.150.55.4	300	110	280	1093	780	559	110	2"	1033	164	0	280	450	726	M16	150	386
SE1.100.150.75.4	300	110	280	1093	780	545	110	2"	1081	164	0	280	450	773	M16	150	380

SEV.65, DN 65 or DN 80 outlet

Pump type	Z2	Z3	Z4	Z6	Z7	Z8	Z9	Z10	Z11	Z12a	Z14	Z15	Z16	Z23	ZM	ZDN1	S3OPR
SEV.65.65.22.2	210	95	140	730	543	394	81	1 1/2"	834	63	1	175	266	652	M16	65	255
SEV.65.65.30.2	210	95	140	730	543	394	81	1 1/2"	834	63	1	175	266	652	M16	65	255
SEV.65.65.40.2	210	95	140	790	604	424	81	1 1/2"	908	60	1	175	266	705	M16	65	251
SEV.65.80.22.2	220	95	160	750	557	408	81	1 1/2"	868	97	13	171	345	652	M16	80	288
SEV.65.80.30.2	220	95	160	750	557	408	81	1 1/2"	868	97	13	171	345	652	M16	80	288
SEV.65.80.40.2	220	95	160	808	616	437	81	1 1/2"	942	94	13	171	345	705	M16	80	285

SEV.80, DN 80 outlet

Pump type	Z2	Z3	Z4	Z6	Z7	Z8	Z9	Z10	Z11	Z12a	Z14	Z15	Z16	Z23	ZM	ZDN1	S3OPR
SEV.80.80.11.4	220	95	160	762	569	402	81	1 1/2"	889	91	13	171	345	679	M16	80	301
SEV.80.80.13.4	220	95	160	762	569	402	81	1 1/2"	889	91	13	171	345	679	M16	80	301
SEV.80.80.15.4	220	95	160	762	569	402	81	1 1/2"	889	91	13	171	345	679	M16	80	301
SEV.80.80.22.4	220	95	160	762	569	402	81	1 1/2"	889	91	13	171	345	679	M16	80	301
SEV.80.80.40.2	220	95	160	809	617	437	81	1 1/2"	970	96	13	171	345	731	M16	80	312
SEV.80.80.60.2	220	95	160	809	617	437	81	1 1/2"	970	96	13	171	345	731	M16	80	312
SEV.80.80.75.2	220	95	160	809	617	437	81	1 1/2"	970	96	13	171	345	731	M16	80	312
SEV.80.80.92.2	220	95	160	842	650	454	81	1 1/2"	999	77	13	171	345	778	M16	80	290
SEV.80.80.110.2	220	95	160	842	650	454	81	15	999	77	13	171	345	778	M16	80	290

SEV.80, DN 100 outlet

Pump type	Z2	Z3	Z4	Z6	Z7	Z8	Z9	Z10	Z11	Z12a	Z14	Z15	Z16	Z23	ZM	ZDN1	S3OPR
SEV.80.100.11.4	260	110	220	796	625	458	110	2"	929	131	0	220	413	679	M16	100	344
SEV.80.100.13.4	260	110	220	796	625	458	110	2"	929	131	0	220	413	679	M16	100	344
SEV.80.100.15.4	260	110	220	796	625	458	110	2"	929	131	0	220	413	679	M16	100	344
SEV.80.100.22.4	260	110	220	796	625	458	110	2"	929	131	0	220	413	679	M16	100	344
SEV.80.100.40.2	260	110	220	899	673	493	110	2"	1010	136	0	220	413	731	M16	100	345
SEV.80.100.60.2	260	110	220	899	673	493	110	2"	1010	136	0	220	413	731	M16	100	345
SEV.80.100.75.2	260	110	220	899	673	493	110	2"	1010	136	0	220	413	731	M16	100	345
SEV.80.100.92.2	260	110	220	943	706	510	110	2"	1039	117	0	220	413	778	M16	100	326
SEV.80.100.110.2	260	110	220	943	706	510	110	2"	1039	117	0	220	413	778	M16	100	326

SEV.100, DN 100 outlet

Pump type	Z2	Z3	Z4	Z6	Z7	Z8	Z9	Z10	Z11	Z12a	Z14	Z15	Z16	Z23	ZM	ZDN1	S3OPR
SEV.100.100.30.4	260	110	220	900	674	494	110	2"	996	106	0	220	413	747	M16	100	332
SEV.100.100.40.4	260	110	220	900	674	494	110	2"	996	106	0	220	413	747	M16	100	332
SEV.100.100.55.4	260	110	220	900	674	494	110	2"	996	106	0	220	413	747	M16	100	332
SEV.100.100.75.4	260	110	220	933	707	511	110	2"	1043	95	0	220	413	804	M16	100	320

Horizontal dry installation with brackets

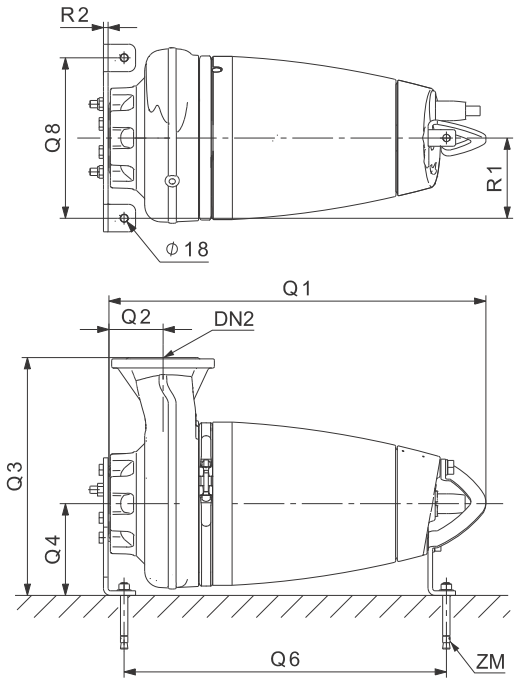

TM04 7930 2510

Fig. 33 SE1

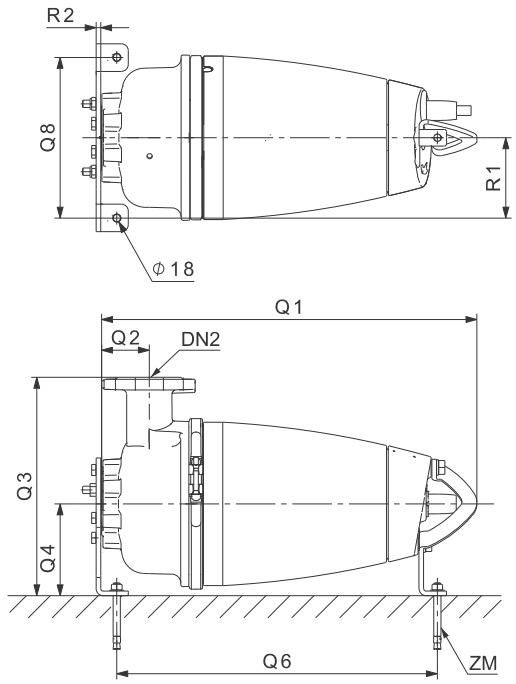

TM04 7934 2510

Fig. 34 SEV

SE1.50, DN 65 or DN 80 outlet

Pump type	R1	R2	Q1	Q2	Q3	Q4	Q6	Q8	ZM	DN2
SE1.50.65.22.2	175	10	682	93	416	200	579	350	M16	65
SE1.50.65.30.2	175	10	682	93	416	200	579	350	M16	65
SE1.50.65.40.2	175	10	749	93	427	200	659	350	M16	65
SE1.50.80.22.2	175	10	682	100	416	200	579	350	M16	80
SE1.50.80.30.2	175	10	682	100	416	200	579	350	M16	80
SE1.50.80.40.2	175	10	749	100	427	200	659	350	M16	80

SE1.80, DN 80 outlet

Pump type	R1	R2	Q1	Q2	Q3	Q4	Q6	Q8	ZM	DN2
SE1.80.80.15.4	175	10	723	100	472	200	620	350	M16	80
SE1.80.80.22.4	175	10	723	100	472	200	620	350	M16	80
SE1.80.80.30.4	175	10	820	118	519	200	699	350	M16	80
SE1.80.80.40.4	175	10	820	118	519	200	699	350	M16	80
SE1.80.80.55.4	175	10	820	118	519	200	699	350	M16	80
SE1.80.80.75.4	175	10	876	118	528	210	741	350	M16	80

SE1.80, DN 100 outlet

Pump type	R1	R2	Q1	Q2	Q3	Q4	Q6	Q8	ZM	DN2
SE1.80.100.15.4	175	10	723	112	472	200	620	350	M16	100
SE1.80.100.22.4	175	10	723	112	472	200	620	350	M16	100
SE1.80.100.30.4	175	10	820	118	519	200	699	350	M16	100
SE1.80.100.40.4	175	10	820	118	519	200	699	350	M16	100
SE1.80.100.55.4	175	10	820	118	519	200	699	350	M16	100
SE1.80.100.75.4	175	10	876	118	528	210	741	350	M16	100

SE1.100, DN 100 or DN 150 outlet

Pump type	R1	R2	Q1	Q2	Q3	Q4	Q6	Q8	ZM	DN2
SE1.100.100.40.4	250	12	827	115	620	300	706	500	M16	100
SE1.100.100.55.4	250	12	827	115	620	300	706	500	M16	100
SE1.100.100.75.4	250	12	884	115	612	300	749	500	M16	100
SE1.100.150.40.4	250	12	811	143	620	300	690	500	M16	150
SE1.100.150.55.4	250	12	811	143	620	300	690	500	M16	150
SE1.100.150.75.4	250	12	868	143	606	300	733	500	M16	150

SEV.65, DN 65 or DN 80 outlet

Pump type	R1	R2	Q1	Q2	Q3	Q4	Q6	Q8	ZM	DN2
SEV.65.65.22.2	175	10	725	102	446	200	623	350	M16	65
SEV.65.65.30.2	175	10	725	102	446	200	623	350	M16	65
SEV.65.65.40.2	175	10	790	106	476	200	700	350	M16	65
SEV.65.80.22.2	175	10	726	103	447	200	623	350	M16	80
SEV.65.80.30.2	175	10	726	103	447	200	623	350	M16	80
SEV.65.80.40.2	175	10	791	106	476	200	700	350	M16	80

SEV.80, DN 80 outlet

Pump type	R1	R2	Q1	Q2	Q3	Q4	Q6	Q8	ZM	DN2
SEV.80.80.11.4	175	10	752	109	441	200	650	350	M16	80
SEV.80.80.13.4	175	10	752	109	441	200	650	350	M16	80
SEV.80.80.15.4	175	10	752	109	441	200	650	350	M16	80
SEV.80.80.22.4	175	10	752	109	441	200	650	350	M16	80
SEV.80.80.40.2	175	10	816	104	476	200	726	350	M16	80
SEV.80.80.60.2	175	10	816	104	476	200	695	350	M16	80
SEV.80.80.75.2	175	10	816	104	476	200	695	350	M16	80
SEV.80.80.92.2	175	10	874	123	493	200	739	350	M16	80
SEV.80.80.110.2	175	10	874	123	493	200	739	350	M16	80

SEV.80, DN 100 outlet

Pump type	R1	R2	Q1	Q2	Q3	Q4	Q6	Q8	ZM	DN2
SEV.80.100.11.4	175	10	752	109	441	200	650	350	M16	100
SEV.80.100.13.4	175	10	752	109	441	200	650	350	M16	100
SEV.80.100.15.4	175	10	752	109	441	200	650	350	M16	100
SEV.80.100.22.4	175	10	752	109	441	200	650	350	M16	100
SEV.80.100.40.2	175	10	816	104	486	200	728	350	M16	100
SEV.80.100.60.2	175	10	816	104	486	200	728	350	M16	100
SEV.80.100.75.2	175	10	816	104	486	200	728	350	M16	100
SEV.80.100.92.2	175	10	874	123	503	200	739	350	M16	100
SEV.80.100.110.2	175	10	874	123	503	200	739	350	M16	100

SEV.100, DN 100 outlet

Pump type	R1	R2	Q1	Q2	Q3	Q4	Q6	Q8	ZM	DN2
SEV.100.100.30.4	175	10	832	134	477	200	711	350	M16	100
SEV.100.100.40.4	175	10	832	134	477	200	711	350	M16	100
SEV.100.100.55.4	175	10	832	134	477	200	711	350	M16	100
SEV.100.100.75.4	175	10	900	145	494	210	765	350	M16	100

Vertical dry installation

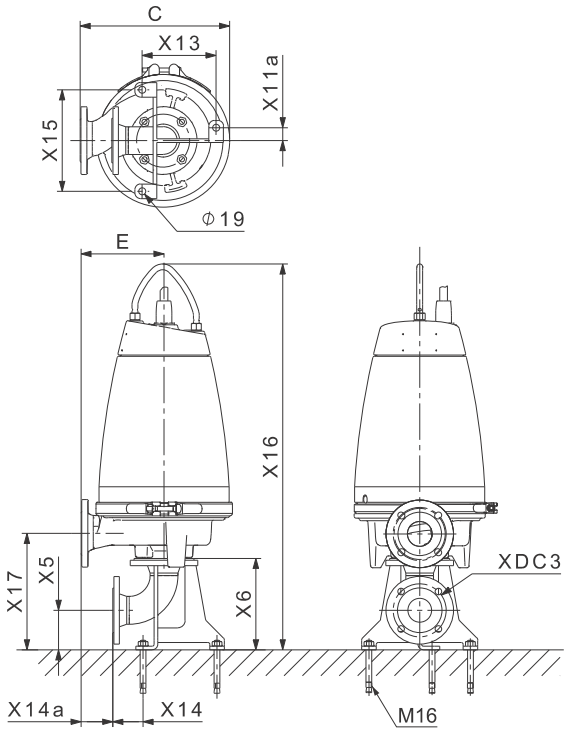

Fig. 35 SE1

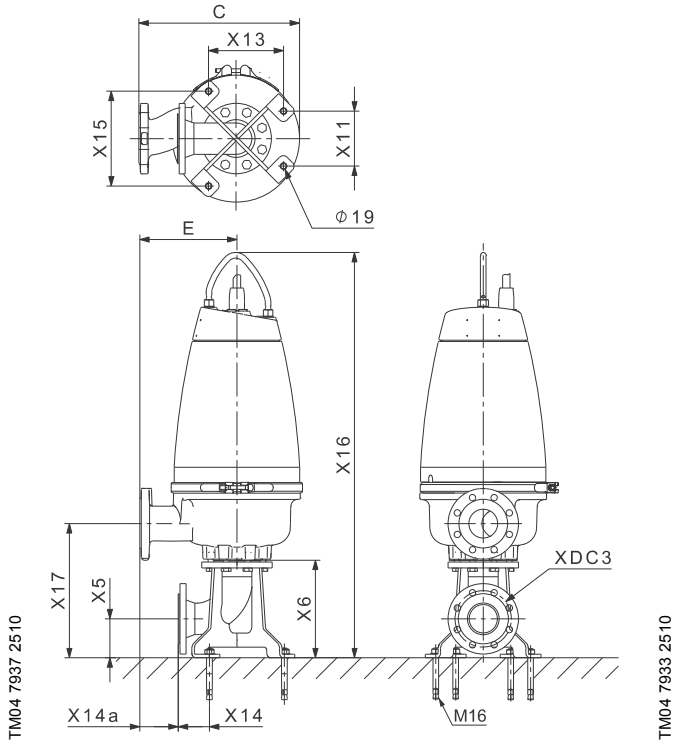

Fig. 36 SEV

SE1.50, DN 65 or DN 80 outlet

Pump type	C	E	X5	X6	X11a	X13	X14	X14a	X16	X17	XDC3
SE1.50.65.22.2	366	216	108	248	30	202	62	76	975	315	65
SE1.50.65.30.2	366	216	108	248	30	202	62	76	975	315	65
SE1.50.65.40.2	407	227	108	248	30	202	62	87	1055	317	65
SE1.50.80.22.2	366	216	108	248	30	202	62	76	975	315	65
SE1.50.80.30.2	366	216	108	248	30	202	62	76	975	315	65
SE1.50.80.40.2	407	227	108	248	30	202	62	87	1055	317	65

SE1.80, DN 80 outlet

Pump type	C	E	X5	X6	X11a*	X13	X14	X14a	X16	X17	XDC3
SE1.80.80.15.4	435	272	136	341	99	255	106	67	1109	433	100
SE1.80.80.22.4	435	272	136	341	99	255	106	67	1109	433	100
SE1.80.80.30.4	505	319	136	341	99	255	106	115	1218	458	100
SE1.80.80.40.4	505	319	136	341	99	255	106	115	1218	458	100
SE1.80.80.55.4	505	319	136	341	99	255	106	115	1218	458	100
SE1.80.80.75.4	530	328	136	341	99	255	106	124	1265	459	100

* Base plate DN 150 or DN 100, X11a = 177.5 mm.

SE1.80, DN 100 outlet

Pump type	C	E	X5	X6	X11a*	X13	X14	X14a	X16	X17	XDC3
SE1.80.100.15.4	435	272	136	341	99	255	106	67	1109	433	100
SE1.80.100.22.4	435	272	136	341	99	255	106	67	1109	433	100
SE1.80.100.30.4	505	319	136	341	99	255	106	115	1218	459	100
SE1.80.100.40.4	505	319	136	341	99	255	106	115	1218	459	100
SE1.80.100.55.4	505	319	136	341	99	255	106	115	1218	459	100
SE1.80.100.75.4	530	328	136	341	99	255	106	124	1265	459	100

* Base plate DN 150 or DN 100, X11a = 177.5 mm.

SE1.100, DN 100 or DN 150 outlet

Pump type	C	E	X5	X6	X11a*	X13	X14	X14a	X16	X17	XDC3
SE1.100.100.40.4	541	320	159	443	99	339	135	37	1327	558	150
SE1.100.100.55.4	541	320	159	443	99	339	135	37	1327	558	150
SE1.100.100.75.4	541	312	159	443	99	339	135	29	1375	558	150
SE1.100.150.40.4	541	320	159	443	99	339	135	37	1311	553	150
SE1.100.150.55.4	541	320	159	443	99	339	135	37	1311	553	150
SE1.100.150.75.4	541	306	159	443	99	339	135	23	1359	553	150

* Base plate DN 200 or DN 150, X11a = 230.5 mm.

SEV.65, DN 65 or DN 80 outlet

Pump type	C	E	X5	X6	X11	X13	X14	X14a	X16	X17	XDC3
SEV.65.65.22.2	396	246	111	276	156	213	76	82	1046	378	80
SEV.65.65.30.2	396	246	111	276	156	213	76	82	1046	378	80
SEV.65.65.40.2	456	276	111	276	156	213	76	112	1123	381	80
SEV.65.80.22.2	397	247	111	276	156	213	76	83	1047	379	80
SEV.65.80.30.2	397	247	111	276	156	213	76	83	1047	379	80
SEV.65.80.40.2	455	276	111	276	156	213	76	112	1124	382	80

SEV.80, DN 80 outlet

Pump type	C	E	X5	X6	X11	X13	X14	X14a	X16	X17	XDC3
SEV.80.80.11.4	409	241	111	276	156	213	76	77	1073	385	80
SEV.80.80.13.4	409	241	111	276	156	213	76	77	1073	385	80
SEV.80.80.15.4	409	241	111	276	156	213	76	77	1073	385	80
SEV.80.80.22.4	409	241	111	276	156	213	76	77	1073	385	80
SEV.80.80.40.2	456	276	111	276	156	213	76	112	1149	380	80
SEV.80.80.60.2	456	276	111	276	156	213	76	112	1149	380	80
SEV.80.80.75.2	456	276	111	276	156	213	76	112	1149	380	80
SEV.80.80.92.2	489	293	111	276	156	213	76	129	1198	399	80
SEV.80.80.110.2	489	293	111	276	156	213	76	129	1198	399	80

SEV.80, DN 100 outlet

Pump type	C	E	X5	X6	X11	X13	X14	X14a	X16	X17	XDC3
SEV.80.100.11.4	409	241	111	276	156	213	76	77	1073	385	100
SEV.80.100.13.4	409	241	111	276	156	213	76	77	1073	385	100
SEV.80.100.15.4	409	241	111	276	156	213	76	77	1073	385	100
SEV.80.100.22.4	409	241	111	276	156	213	76	77	1073	385	100
SEV.80.100.40.2	466	286	111	276	156	213	76	122	1149	385	100
SEV.80.100.60.2	466	286	111	276	156	213	76	122	1149	385	100
SEV.80.100.75.2	466	286	111	276	156	213	76	122	1149	385	100
SEV.80.100.92.2	499	303	111	276	156	213	76	139	1198	399	100
SEV.80.100.110.2	499	303	111	276	156	213	76	139	1198	399	100

SEV.100, DN 100 outlet

Pump type	C	E	X5	X6	X11	X13	X14	X14a	X16	X17	XDC3
SEV.100.100.30.4	457	277	136	341	198	255	106	73	1230	474	100
SEV.100.100.40.4	457	277	136	341	198	255	106	73	1230	474	100
SEV.100.100.55.4	457	277	136	341	198	255	106	73	1230	474	100
SEV.100.100.75.4	490	294	136	341	198	255	106	89	1288	485	100

Weights

Pump type	Outlet	Weight [kg]
SE1.50.65.22.2	DN 65	86
SE1.50.65.30.2		90
SE1.50.65.40.2		122
SE1.50.80.22.2	DN 80	87
SE1.50.80.30.2		91
SE1.50.80.40.2		123
SE1.80.80.15.4		100
SE1.80.80.22.4		102
SE1.80.80.30.4		143
SE1.80.80.40.4		152
SE1.80.80.55.4		157
SE1.80.80.75.4		205
SE1.80.100.15.4	DN 100	101
SE1.80.100.22.4		103
SE1.80.100.30.4		145
SE1.80.100.40.4		153
SE1.80.100.55.4		158
SE1.80.100.75.4		207
SE1.100.100.40.4		157
SE1.100.100.55.4		161
SE1.100.100.75.4		207
SE1.100.150.40.4	DN 150	164
SE1.100.150.55.4		169
SE1.100.150.75.4		213
SEV.65.65.22.2	DN 65	89
SEV.65.65.30.2		92
SEV.65.65.40.2		128
SEV.65.80.22.2	DN 80	90
SEV.65.80.30.2		94
SEV.65.80.40.2		126
SEV.80.80.11.4		95
SEV.80.80.13.4		103
SEV.80.80.15.4		103
SEV.80.80.22.4		106
SEV.80.80.40.2		131
SEV.80.80.60.2		141
SEV.80.80.75.2		142
SEV.80.80.92.2		190
SEV.80.80.110.2		195

Pump type	Outlet	Weight [kg]
SEV.80.100.11.4	DN 100	94
SEV.80.100.13.4		102
SEV.80.100.15.4		102
SEV.80.100.22.4		105
SEV.80.100.40.2		133
SEV.80.100.60.2		143
SEV.80.100.75.2		144
SEV.80.100.92.2		191
SEV.80.100.110.2		196
SEV.100.100.30.4		134
SEV.100.100.40.4		141
SEV.100.100.55.4		146
SEV.100.100.75.4		190

13. Grundfos Product Center

Online search and sizing tool to help you make the right choice.

http://product-selection.grundfos.com

"SIZING" enables you to size a pump based on entered data and selection choices.

"REPLACEMENT" enables you to find a replacement product. Search results will include information on the following:

- the lowest purchase price
- the lowest energy consumption
- the lowest total life cycle cost.

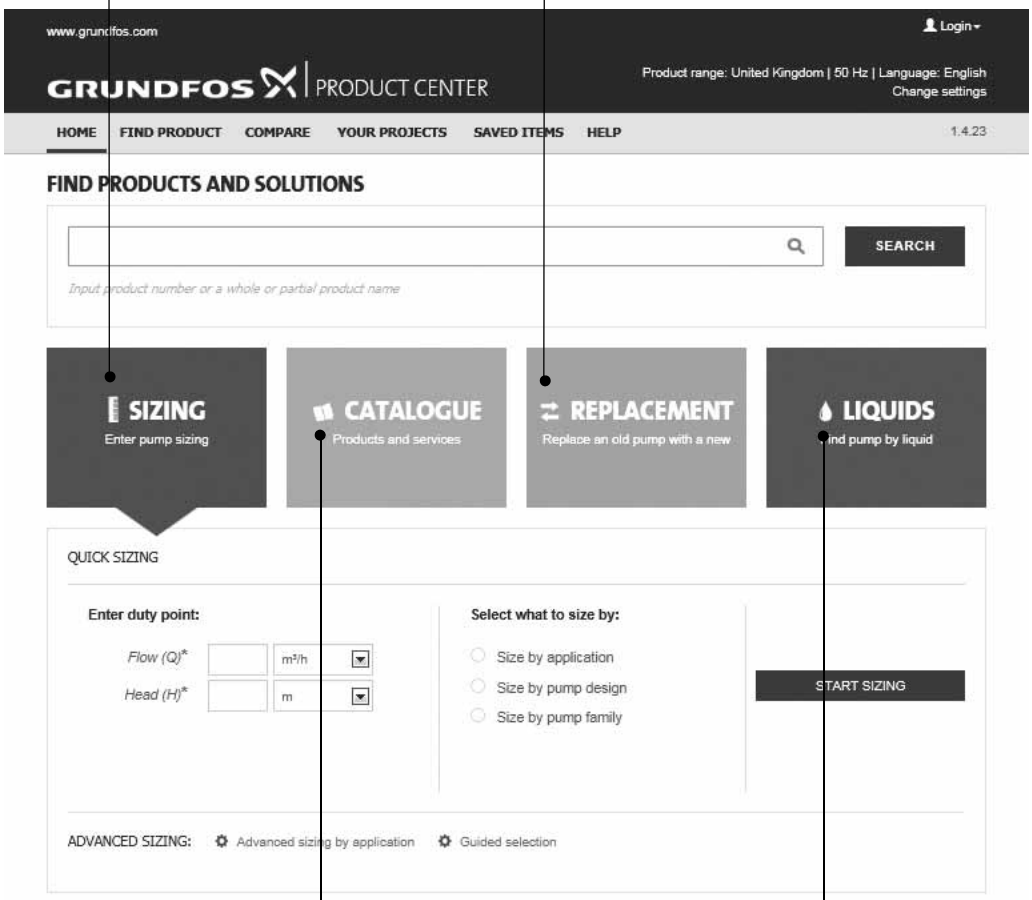

"CATALOGUE" gives you access to the Grundfos product catalogue.

"LIQUIDS" enables you to find pumps designed for aggressive, flammable or other special liquids.

All the information you need in one place

Performance curves, technical specifications, pictures, dimensional drawings, motor curves, wiring diagrams, spare parts, service kits, 3D drawings, documents, system parts. The Product Center displays any recent and saved items - including complete projects - right on the main page.

Downloads

On the product pages, you can download installation and operating instructions, data booklets, service instructions, etc. in PDF format.

Subject to alterations.

be think innovate

97756118 1017

ECM: 1208451

GRUNDFOS A/S
DK-8850 Bjerringbro . Denmark
Telephone: +45 87 50 14 00
www.grundfos.com

GRUNDFOS