GSD

Cast Iron End Suction Motor Pumps (to EN733)

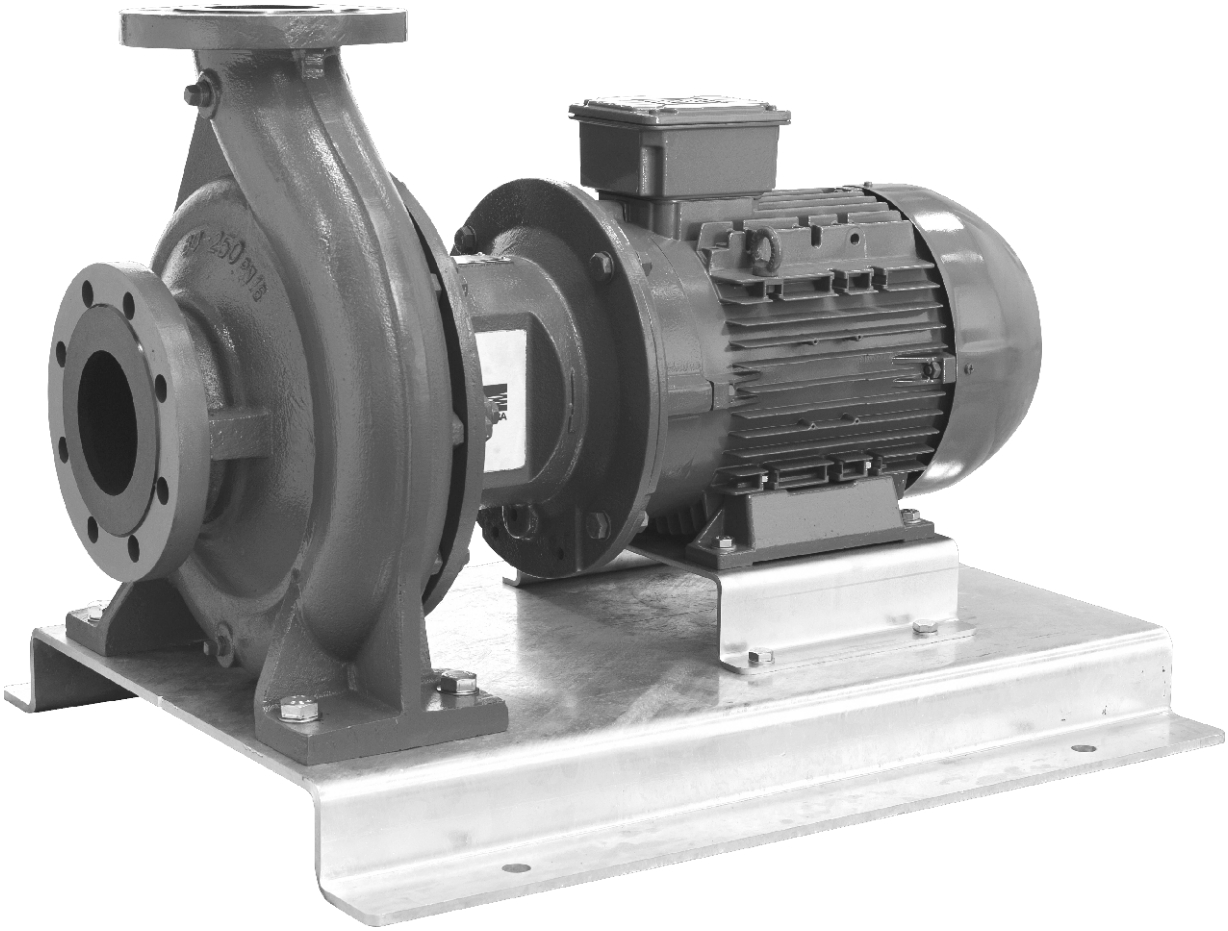

Contents

SPECIFICATIONS

Features, Applications & Exploded View	101
Specifications	102
Model Code & Nameplate details	103
Performance Curve & MEI explanation	104
Selection Chart - 2 Pole	105
Selection Chart - 4 Pole	106

PERFORMANCE CURVES

Index of performance curves	200
2 Pole performance curves	201 to 227
4 Pole performance curves	228 to 261

CONSTRUCTION

Sectional view & materials of construction	300
Configurations	301
Mechanical seal	302

DIMENSIONS

Index of dimensions	400
Dimensions on baseplate	
Dimensional drawing	401
Flange dimensions (PN16)	401
Dimension tables	402 to 407
Dimensions without baseplate	
Type 1A - drawing and dimension table	408 to 409
Type 2A - drawing and dimension table	410 to 411
Type 3A - drawing and dimension table	412 to 413
Type 3B - drawing and dimension table	414 to 415
Type 3C - drawing and dimension table	416 to 417
Type 4A - drawing and dimension table	418 to 419
Type 5A - drawing and dimension table	420 to 421
Type 5B - drawing and dimension table	422 to 423
Type 6A - drawing and dimension table	424 to 426
Type 6B - drawing and dimension table	427 to 428
Pump & motor only - no spacers *(for reference)*	
Pumps & motor only - drawing and dimension tables	429 to 435
Pump end detailed dimensions	436 to 437
Motor dimensions (WEG W21 IE3)	438 to 439

TECHNICAL DATA

MEI - Minimum efficiency index by model	500
Minimum/Maximum impeller diameters	501
Noise levels - 2 Pole models	502
Noise levels - 4 Pole models	503
Motor data (WEG W21 IE3)	504

E.&O.E. All care has been taken to ensure the accuracy of the information and is correct to the best of our knowledge and is given without guarantee. Specifications subject to change without notice.

Features, applications & exploded view

A versatile high quality compact close coupled motor pump suitable for many applications where water needs to be transferred or boosted

- Pump dimensions to EN733#
- High efficiency hydraulic design (MEI≥0.6 all models)
- Cast Iron/Bronze/Stainless steel construction
- Compact close coupled design

Applications include:-

- Water supply & pressure boosting
- Building services & cooling towers
- Industrial
- Irrigation, etc.

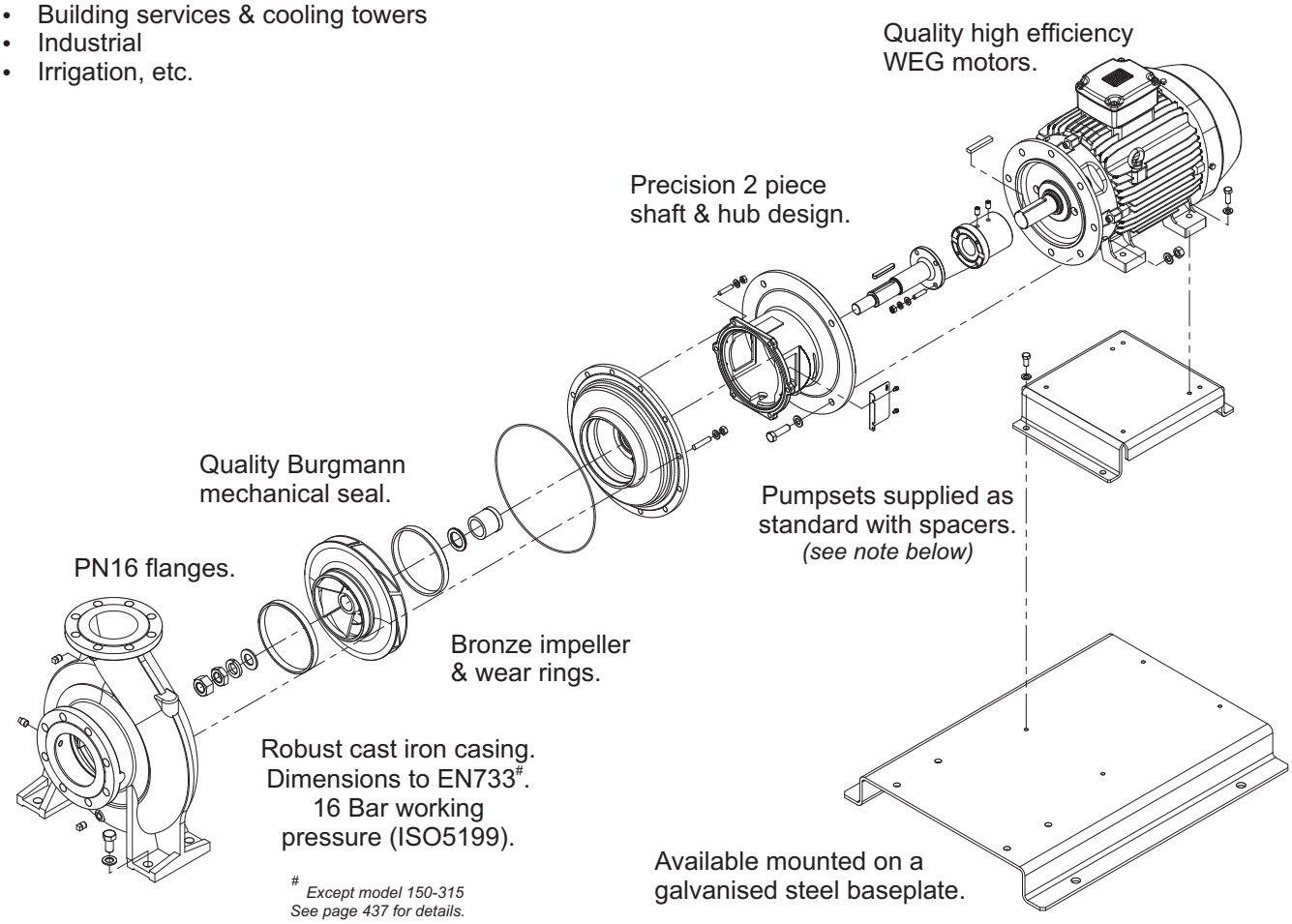

Except model 150-315
See page 437 for details.

Pumpsets with motors over 90 frame* are fitted with spacers for ease of installation and maintenance. There are various types and combinations of spacers depending on the model. (See page 301 for more details.) The motors are bolted to the motor spacers, so that the complete rotating element with motor and spacers is a single rigid assembly that can be "slid" back for ease of maintenance and reassembly.

** following models use a stay instead of motor spacers*
GSD4 40-315/4.0 kW GSD4 100-160/3.0 kW
GSD4 100-160/2.2 kW GSD4 100-200/3.0 kW

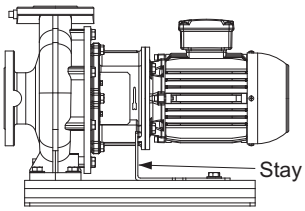

All models with 90 frame motors (and the 4 models above) have a single stay as shown on the drawing.

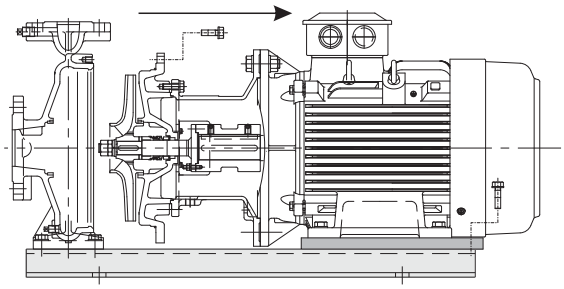

Specifications

		Standard	Option
Pump	Type	Close coupled end suction motor pump to EN733 (Pump end dimensions)#	
	Flanges	EN PN 16 (EN 1092-2)	
Scope	Pump discharge	32 mm to 150 mm	
	Motor power	2 Pole: 1.5 to 110 kW 4 Pole: 1.1 to 75 kW	
	Performance	2 pole: (Q) 8 - 800 m³/hr (H) 10 - 150 m hd 4 pole: (Q) 4 - 650 m³/hr (H) 3 - 70 m hd	
Liquid handled	Type	Water	
	Temperature	-10° to +120°C See note ① page 302	
Max. allowable working pressure (MAWP)		16 Bar*	
Max. allowable suction pressure (MASP)**		<16 Bar - Pump shut-off pressure (PSP)	
Construction	Impeller	Closed centrifugal	
	Shaft	Stub shaft & hub	
	Mechanical seal	Single spring, rubber bellows (to EN12756)	
Materials	Casing	Cast iron (FC250)	
	Impeller	Bronze (CAC 406)	
	Casing wear rings	Bronze (CAC 406)	
	Shaft	420 Stainless steel *(wetted part)*	
	Mechanical Seal	Carbon/SiC/EPDM	
	Back cover	Cast iron (FC250)	
	Motor bracket	Cast iron (FC250)	
	Spacers	*Refer page 301*	
Motor	Type	WEG W21	
	Efficiency Std	IE3 (or E2)	
	Enclosure	IP55	
	Insulation class	Class F	
	Motor frame material	Aluminium (up to 200 Fr.) Cast Iron (225 Fr. & above)	
Supply		Motor pump c/w spacers where required. *(refer to page 301 for details)*	On galvanised steel baseplate

* 16 Bar rating to ISO5199
**MASP < MAWP - PSP

Except model 150-315 See page 437 for details.

Model Code

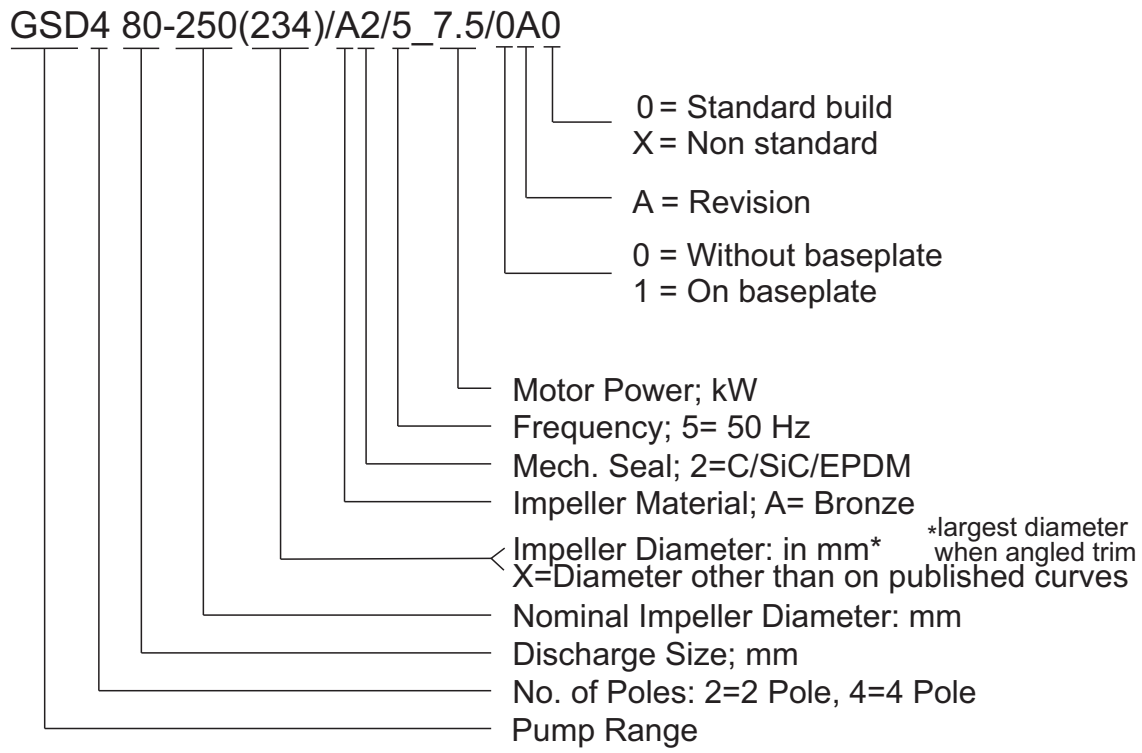

Nameplate

Example: Standard model

Example: Non standard model

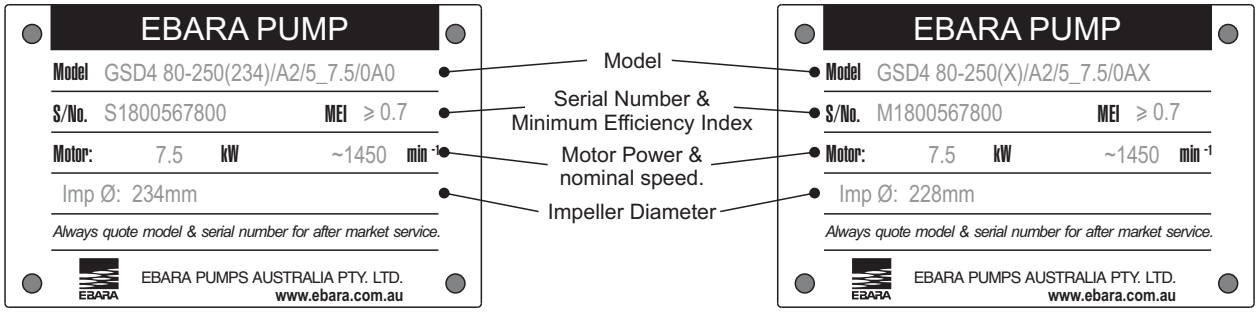

Performance Curves

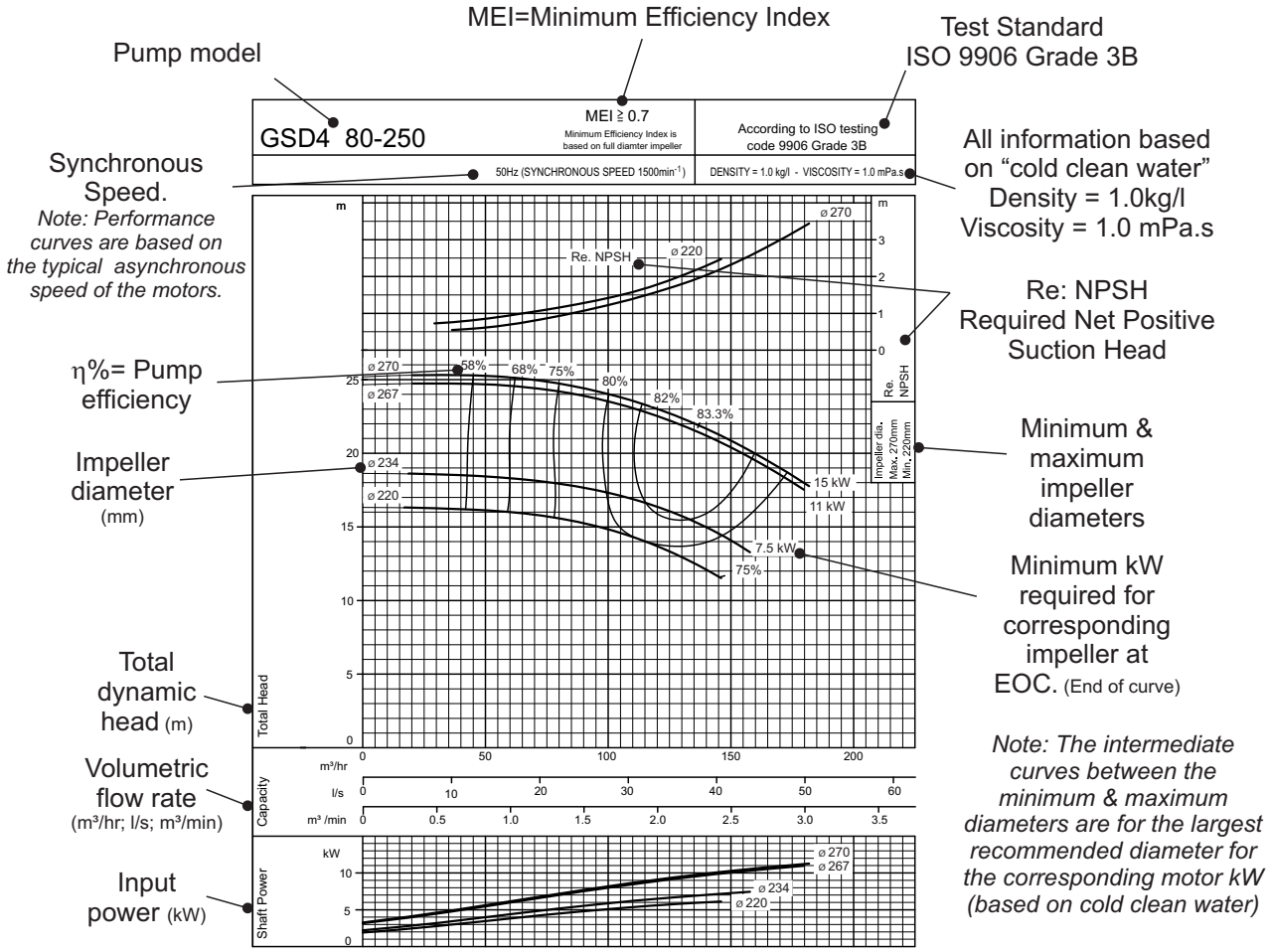

Note: The intermediate curves between the minimum & maximum diameters are for the largest recommended diameter for the corresponding motor kW (based on cold clean water)

MEI - Minimum efficiency index

The Minimum Efficiency Index (MEI) was introduced in Europe as a comparative measure of a pumps efficiency. Recognising that pumping equipment is a major consumer of electrical power, this comparative measure was developed, and pumping equipment had to meet a minimum standard (MEI>0.4) to be sold in Europe after January 2015.
The MEI is based on the full size impeller, and takes into account best efficiency point as well as part load and overload efficiencies to provide a broader comparison. Basically the higher the MEI, the higher the efficiency and comparative performance of the pumps.
The majority of the GSD range are MEI>0.7, with the balance >0.6, an indication of the high quality design and manufacture by Ebara.

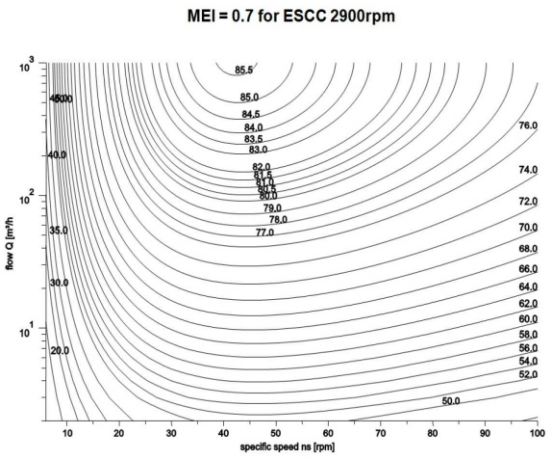

Selection Chart - 2 Pole - 3000 rpm (synchronous speed)

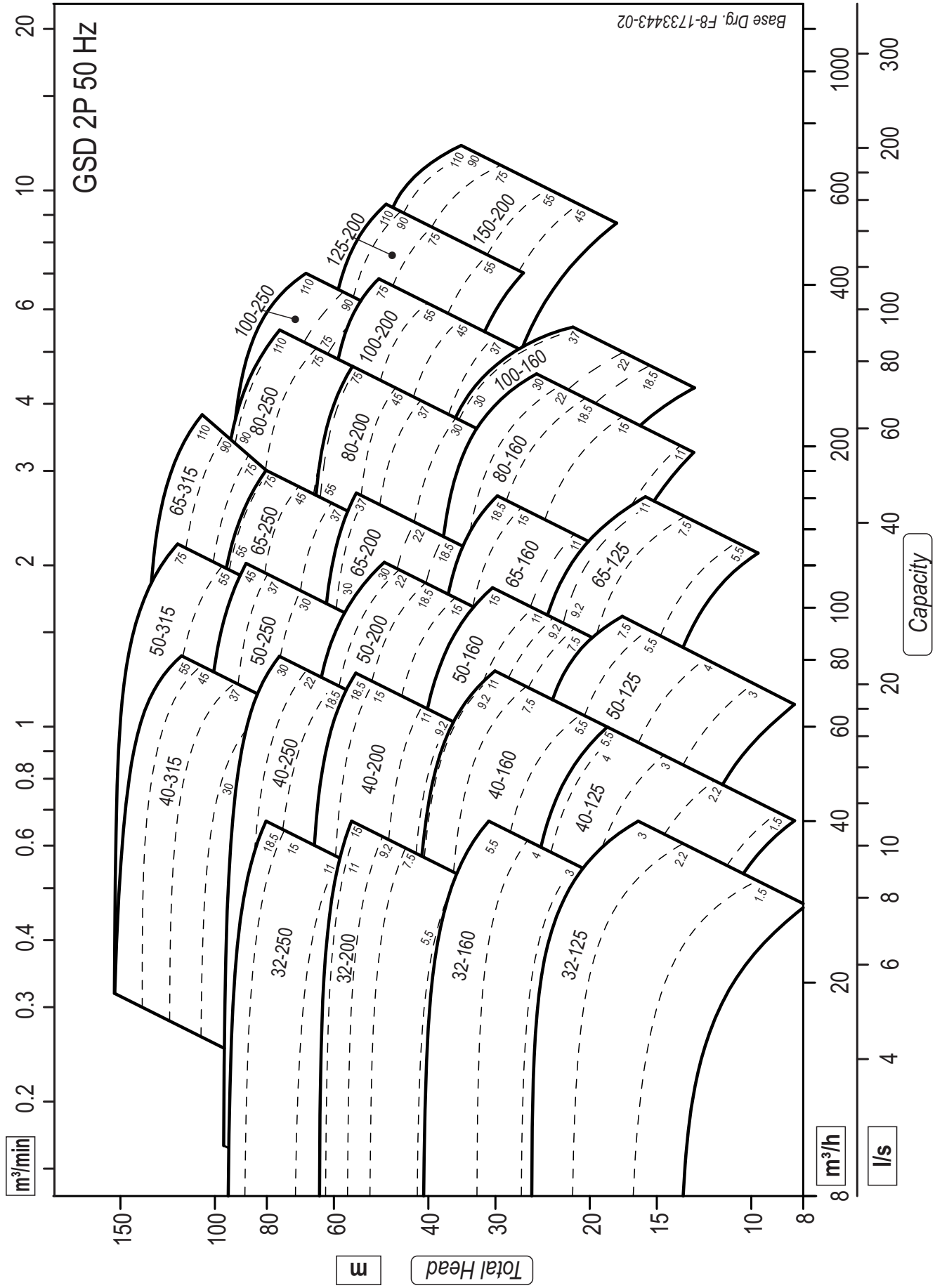

Selection Chart - 4 Pole - 1500 rpm (synchronous speed)

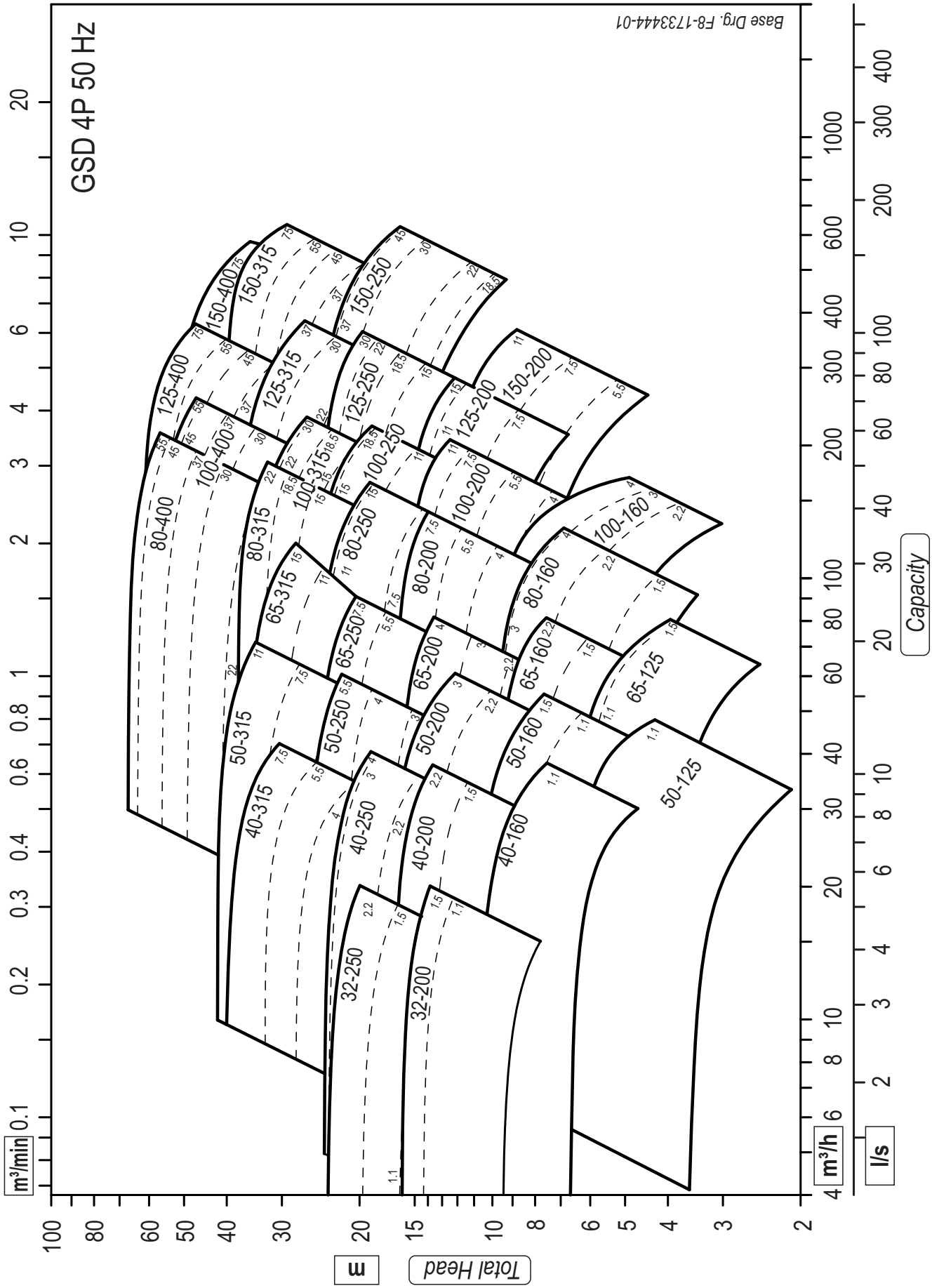

Index - Performance Curves

2 Pole Performance Curves

Model	Page
32-125	201
32-160	202
32-200	203
32-250	204
40-125	205
40-160	206
40-200	207
40-250	208
40-315	209
50-125	210
50-160	211
50-200	212
50-250	213
50-315	214
65-125	215
65-160	216
65-200	217
65-250	218
65-315	219
80-160	220
80-200	221
80-250	222
100-160	223
100-200	224
100-250	225
125-200	226
150-200	227

4 Pole Performance Curves

Model	Page
32-200	228
32-250	229
40-160	230
40-200	231
40-250	232
40-315	233
50-125	234
50-160	235
50-200	236
50-250	237
50-315	238
65-125	239
65-160	240
65-200	241
65-250	242
65-315	243
80-160	244
80-200	245
80-250	246
80-315	247
80-400	248
100-160	249
100-200	250
100-250	251
100-315	252
100-400	253
125-200	254
125-250	255
125-315	256
125-400	257
150-200	258
150-250	259
150-315	260
150-400	261

Performance Curve

GSD 32-125 (2 Pole)	MEI ≧ 0.7 Minimum Efficiency Index is based on full diamter impeller	According to ISO testing code 9906 Grade 3B
50Hz (SYNCHRONOUS SPEED 3000min^{-1})		DENSITY = 1.0 kg/l - VISCOSITY = 1.0 mPa·s

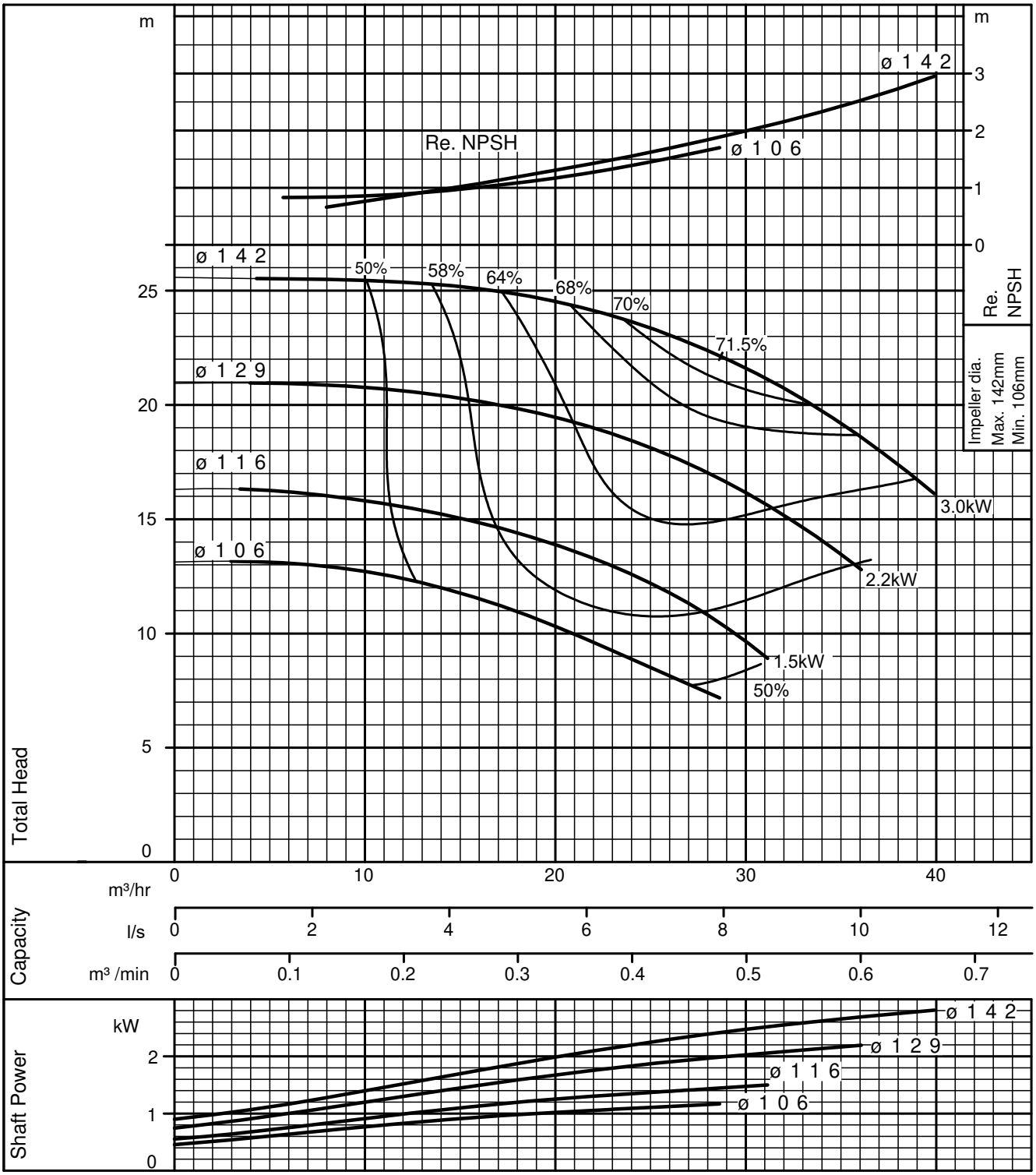

Performance Curve

GSD 32-160 (2 Pole)	MEI ≧ 0.7 Minimum Efficiency Index is based on full diamter impeller	According to ISO testing code 9906 Grade 3B
	50Hz (SYNCHRONOUS SPEED 3000min^{-1})	DENSITY = 1.0 kg/l - VISCOSITY = 1.0 mPa·s

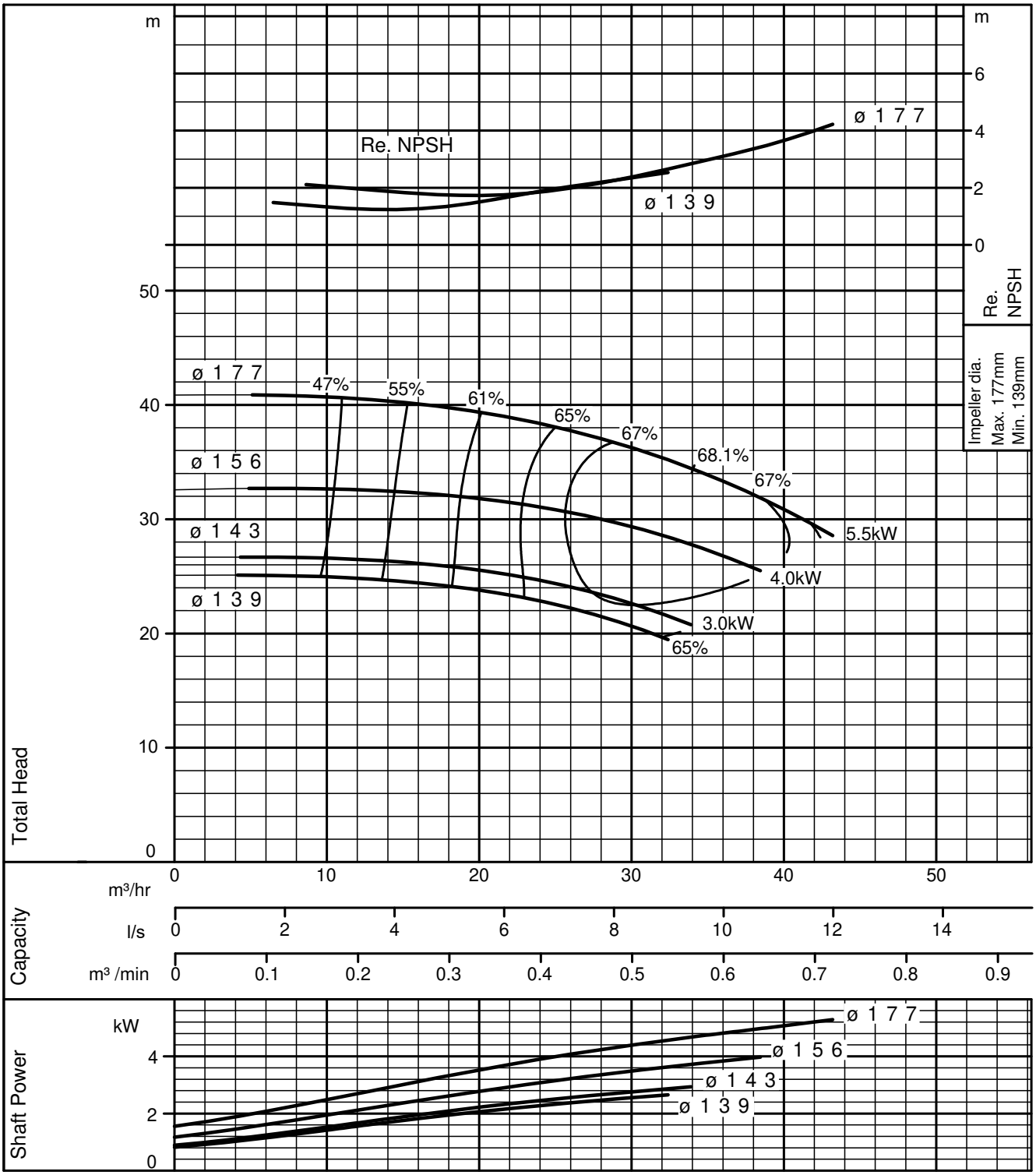

Performance Curve

GSD 32-200 (2 Pole)	MEI ≧ 0.7 Minimum Efficiency Index is based on full diamter impeller	According to ISO testing code 9906 Grade 3B
50Hz (SYNCHRONOUS SPEED 3000min^{-1})		DENSITY = 1.0 kg/l - VISCOSITY = 1.0 mPa·s

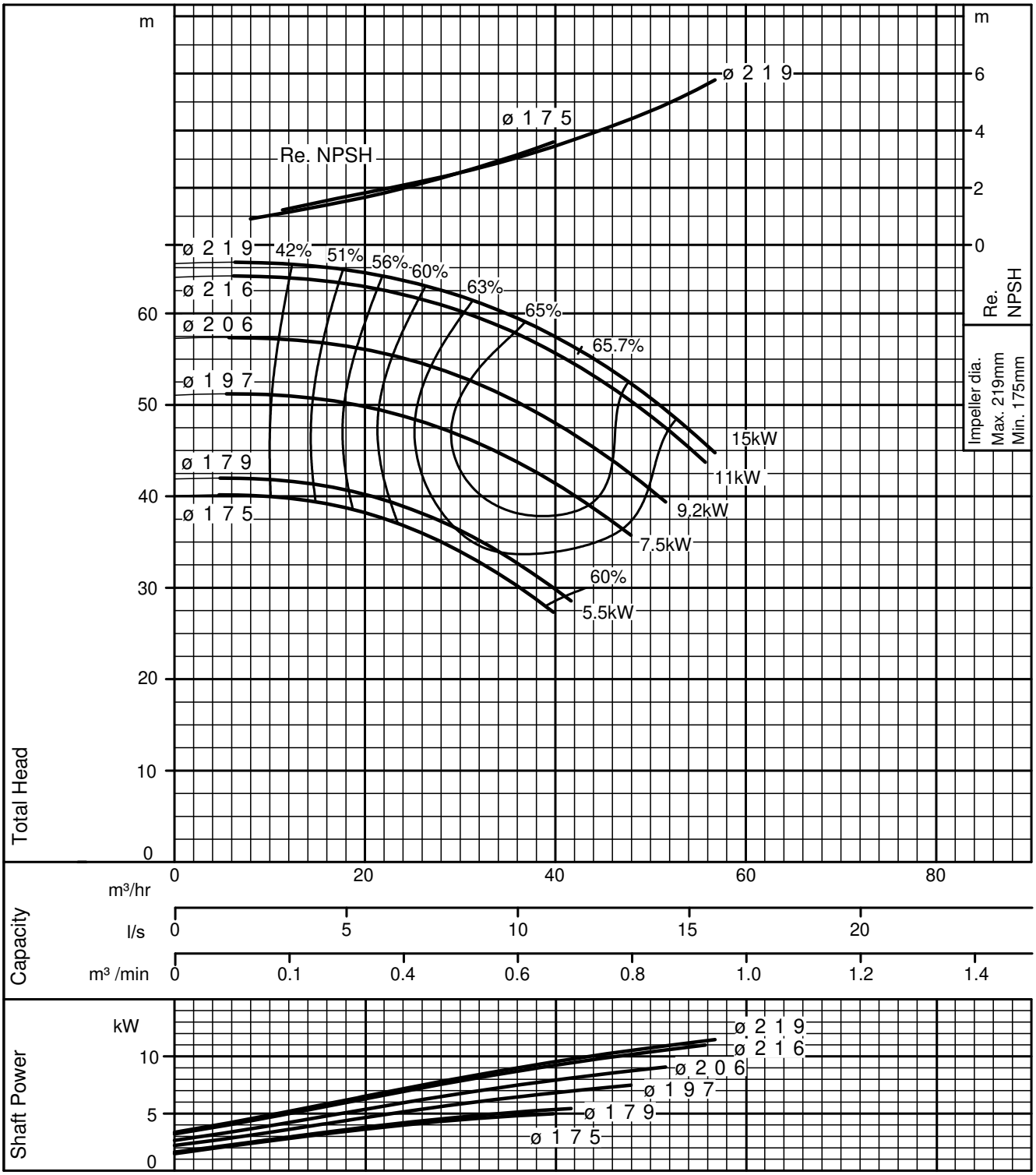

Performance Curve

GSD 32-250 (2 Pole)	MEI ≧ 0.7 Minimum Efficiency Index is based on full diamter impeller	According to ISO testing code 9906 Grade 3B
	50Hz (SYNCHRONOUS SPEED 3000min^{-1})	DENSITY = 1.0 kg/l - VISCOSITY = 1.0 mPa·s

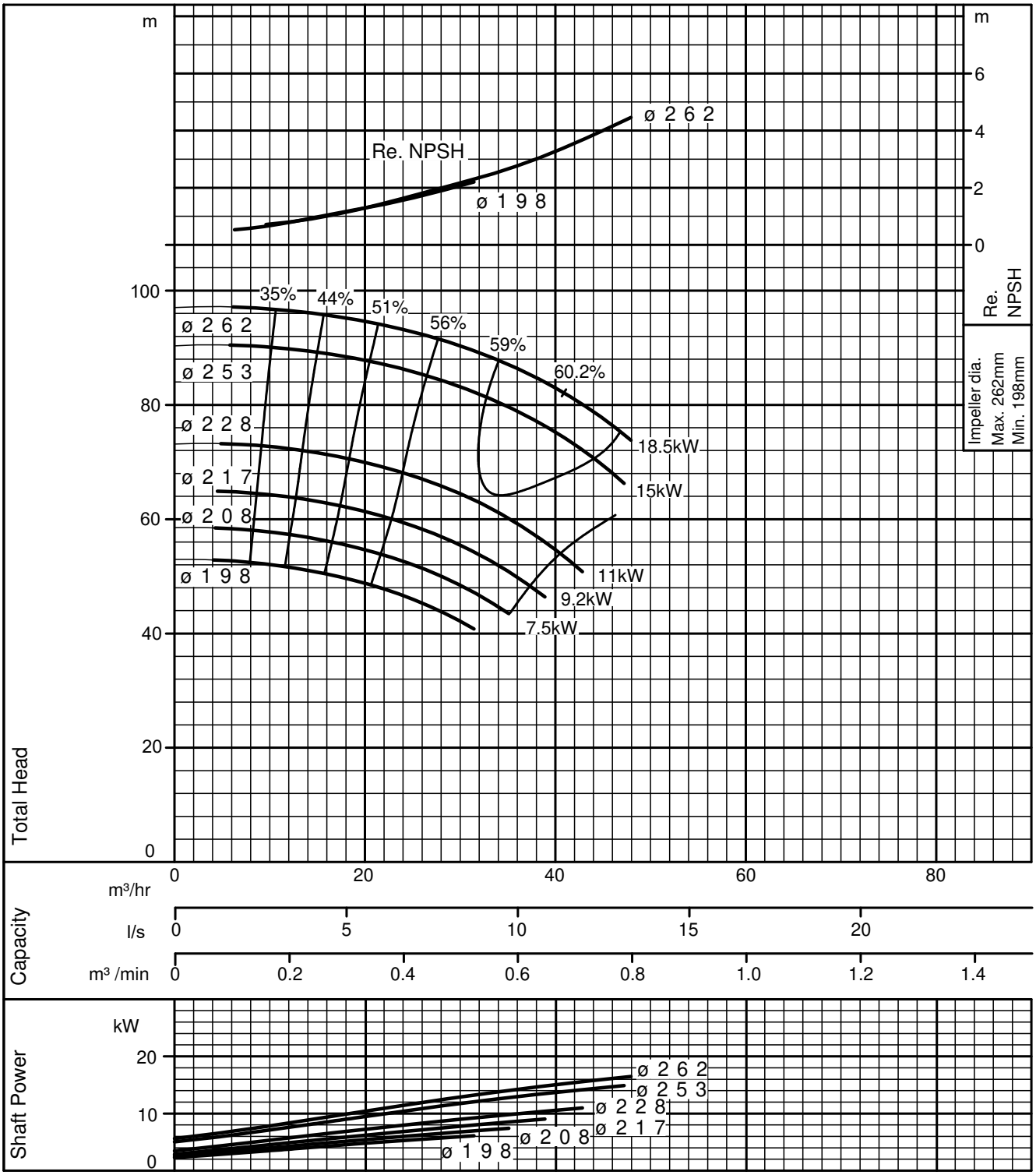

Performance Curve

GSD 40-125 (2 Pole)	MEI ≧ 0.7 Minimum Efficiency Index is based on full diamter impeller	According to ISO testing code 9906 Grade 3B
	50Hz (SYNCHRONOUS SPEED 3000min^{-1})	DENSITY = 1.0 kg/l - VISCOSITY = 1.0 mPa·s

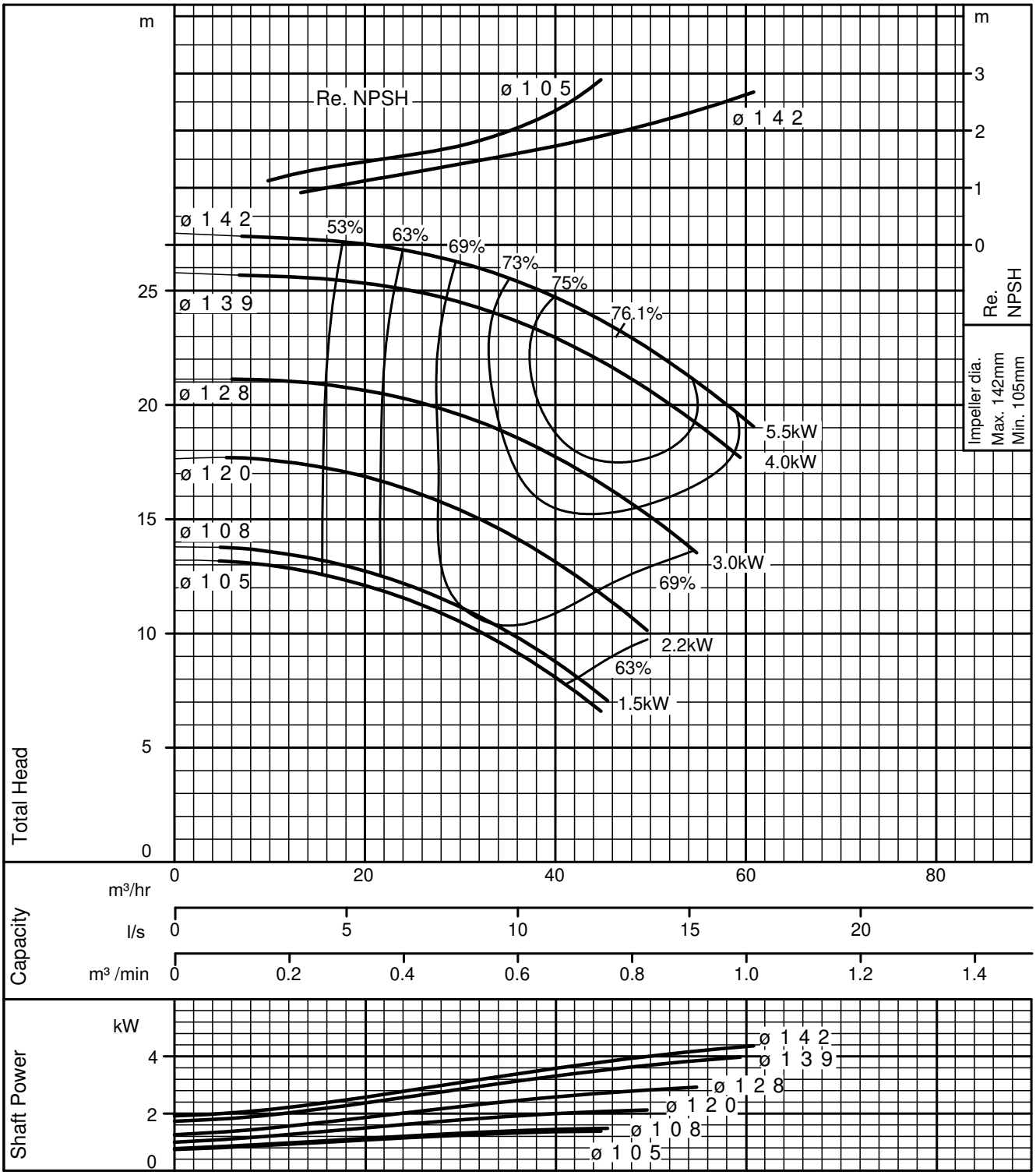

Performance Curve

GSD 40-160 (2 Pole)	MEI ≧ 0.7 Minimum Efficiency Index is based on full diamter impeller	According to ISO testing code 9906 Grade 3B
	50Hz (SYNCHRONOUS SPEED 3000min^{-1})	DENSITY = 1.0 kg/l - VISCOSITY = 1.0 mPa·s

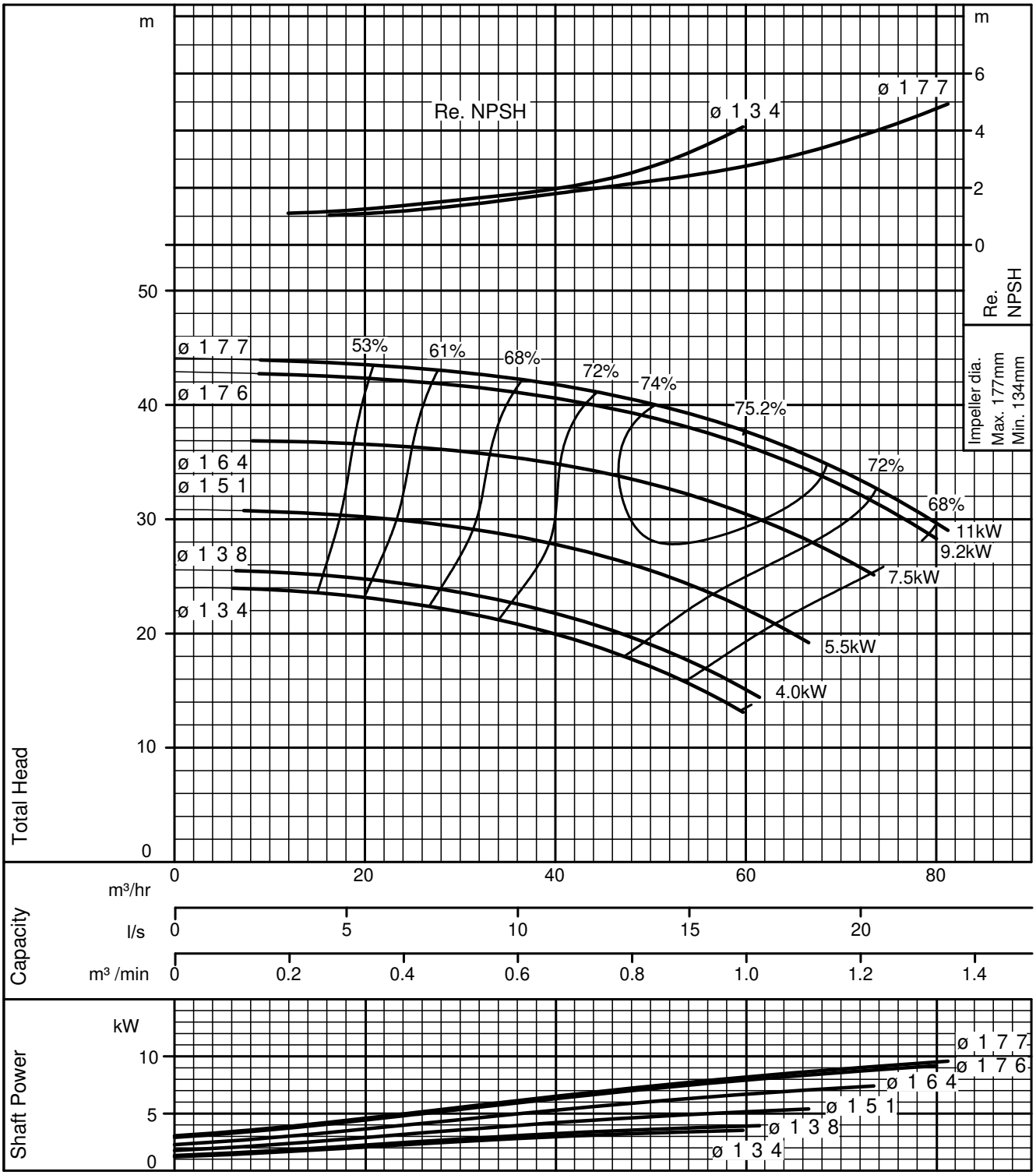

Performance Curve

GSD 40-200 (2 Pole)	MEI ≧ 0.7 Minimum Efficiency Index is based on full diamter impeller	According to ISO testing code 9906 Grade 3B
	50Hz (SYNCHRONOUS SPEED 3000min^{-1})	DENSITY = 1.0 kg/l - VISCOSITY = 1.0 mPa·s

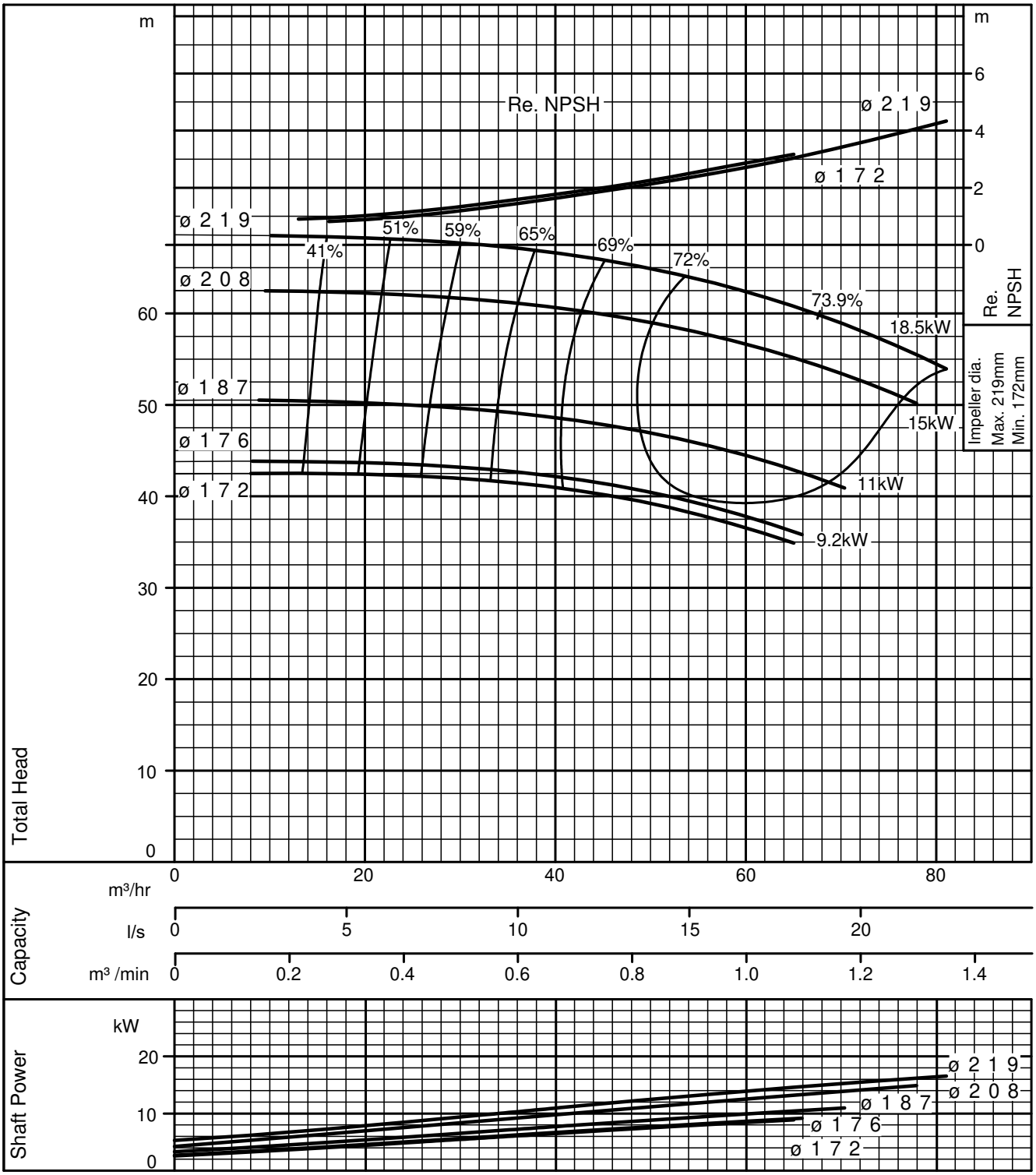

Performance Curve

GSD 40-250 (2 Pole)	MEI ≧ 0.7 Minimum Efficiency Index is based on full diamter impeller	According to ISO testing code 9906 Grade 3B
	50Hz (SYNCHRONOUS SPEED 3000min^{-1})	DENSITY = 1.0 kg/l - VISCOSITY = 1.0 mPa·s

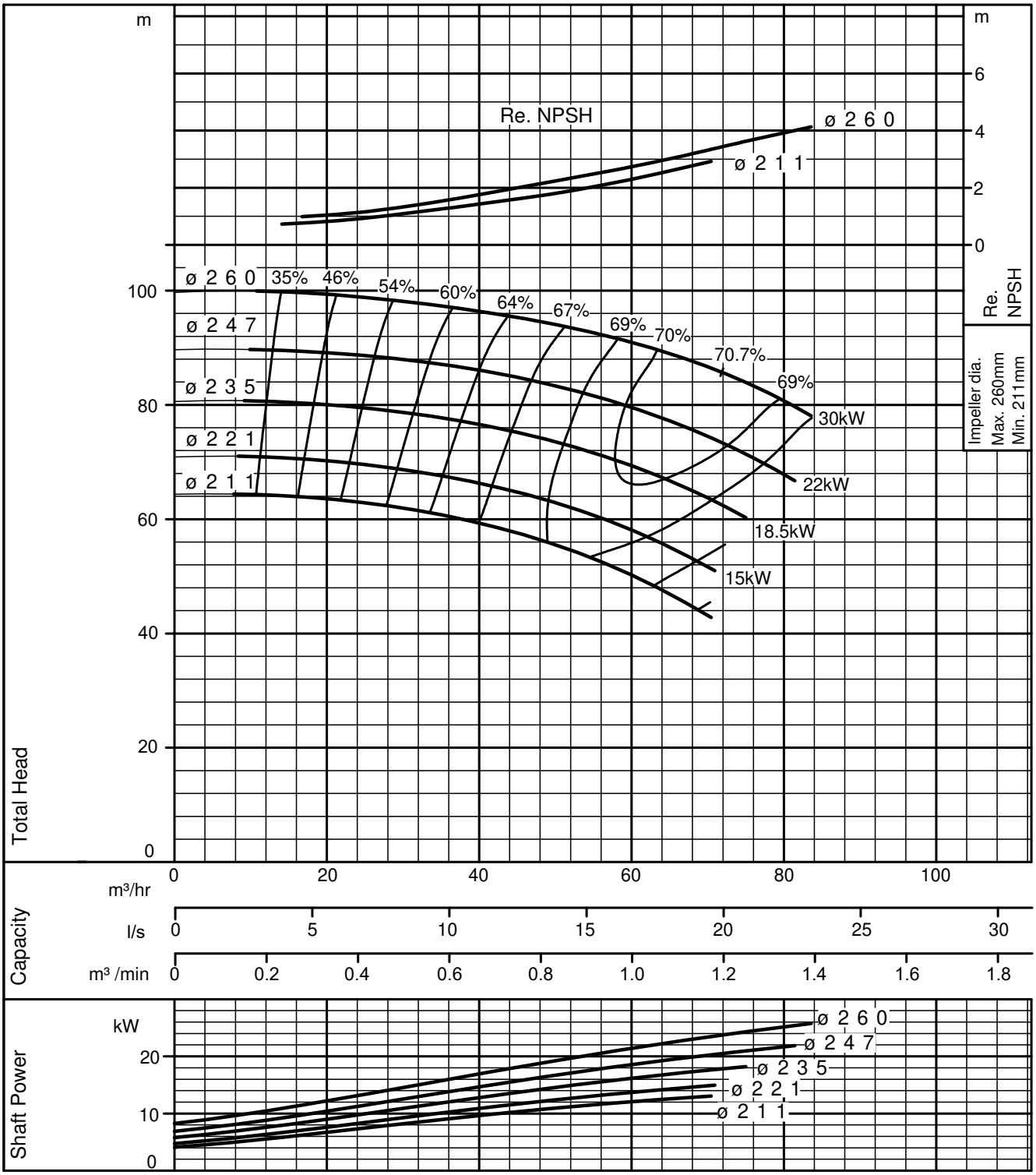

Performance Curve

GSD 40-315 (2 Pole)	MEI ≧ 0.7 Minimum Efficiency Index is based on full diamter impeller	According to ISO testing code 9906 Grade 3B
	50Hz (SYNCHRONOUS SPEED 3000min^{-1})	DENSITY = 1.0 kg/l - VISCOSITY = 1.0 mPa·s

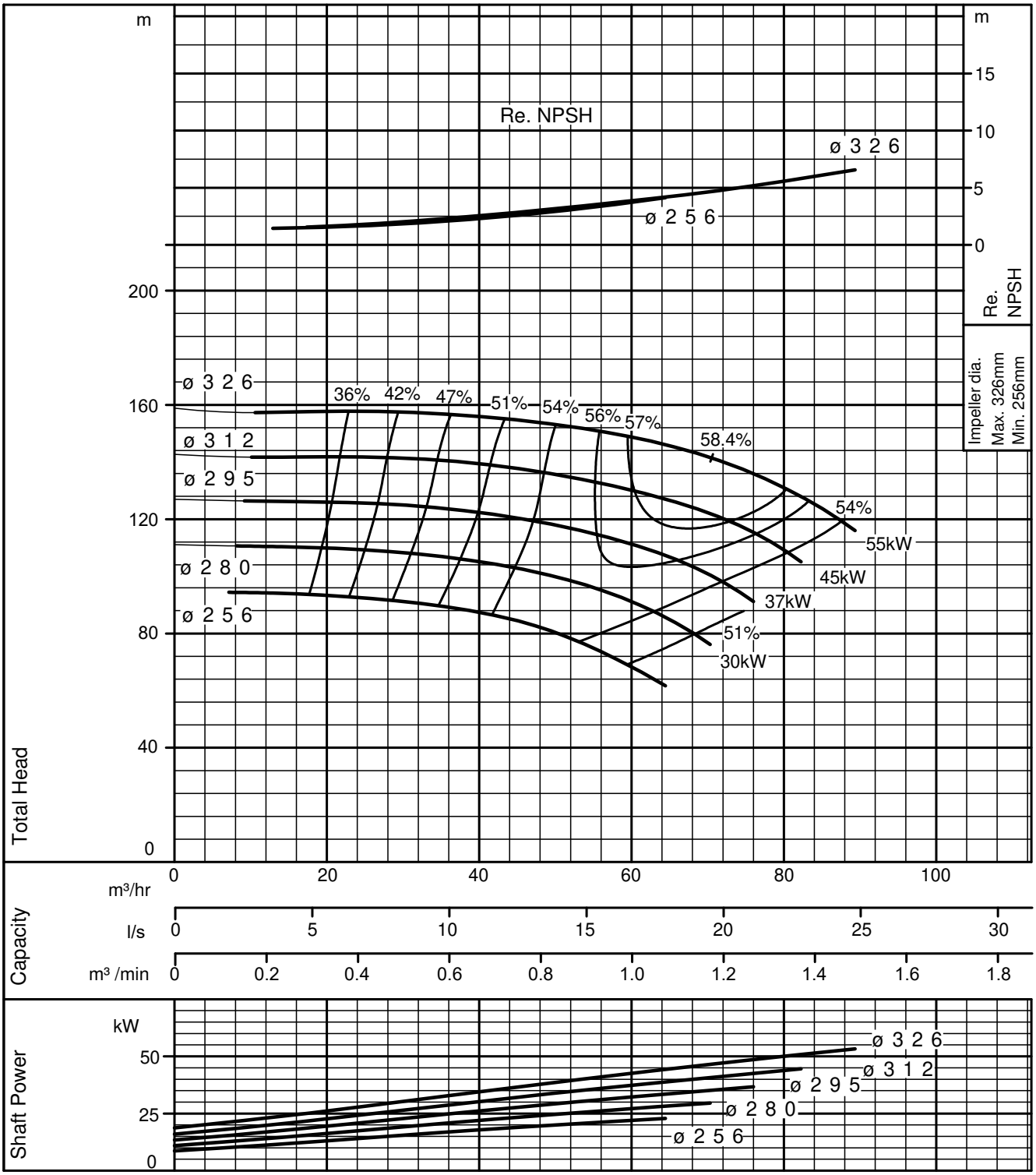

Performance Curve

GSD 50-125 (2 Pole)	MEI ≧ 0.7 Minimum Efficiency Index is based on full diamter impeller	According to ISO testing code 9906 Grade 3B
	50Hz (SYNCHRONOUS SPEED 3000min^{-1})	DENSITY = 1.0 kg/l - VISCOSITY = 1.0 mPa·s

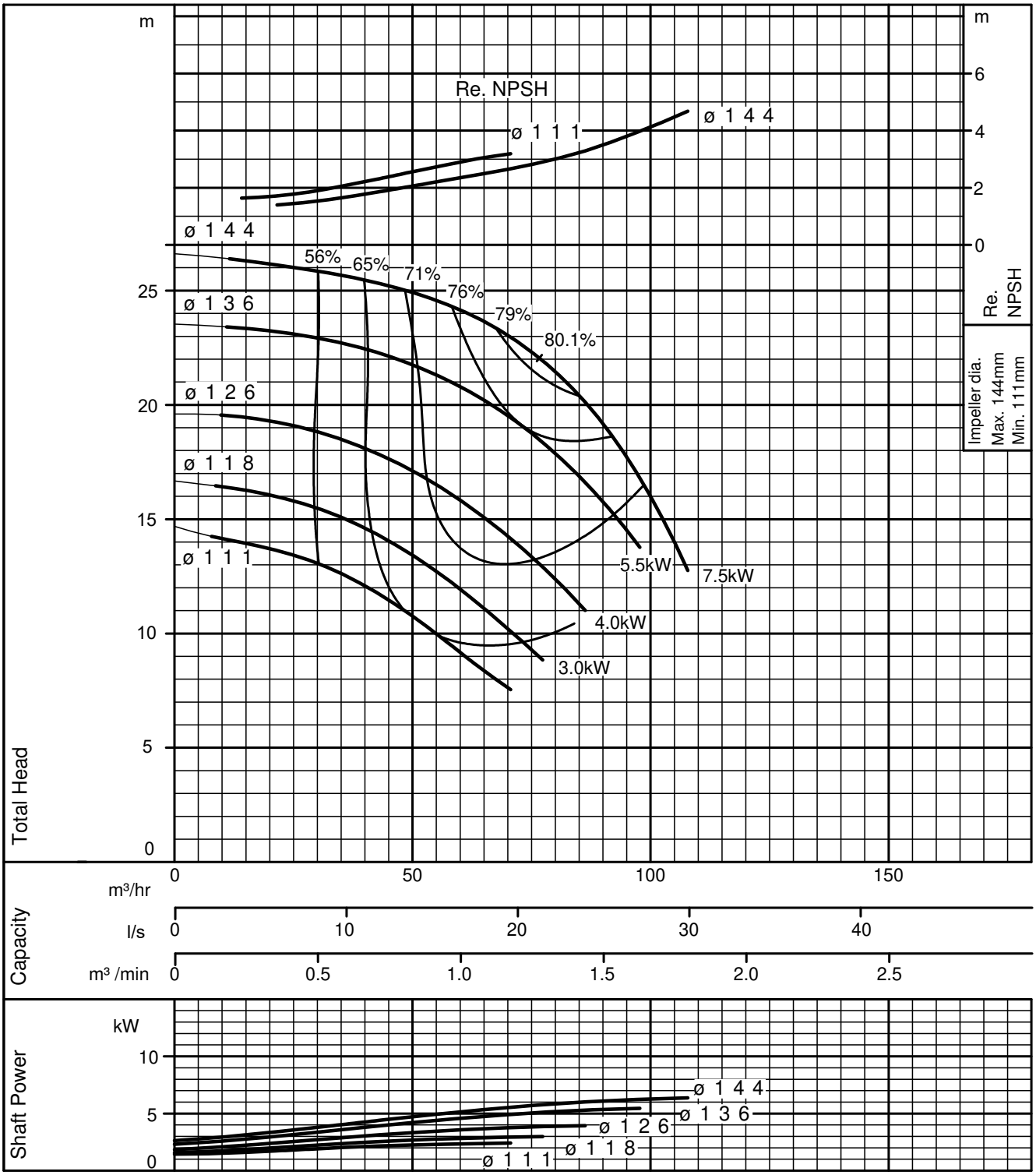

Performance Curve

GSD 50-160 (2 Pole)	MEI ≧ 0.7 Minimum Efficiency Index is based on full diamter impeller	According to ISO testing code 9906 Grade 3B
	50Hz (SYNCHRONOUS SPEED 3000min^{-1})	DENSITY = 1.0 kg/l - VISCOSITY = 1.0 mPa·s

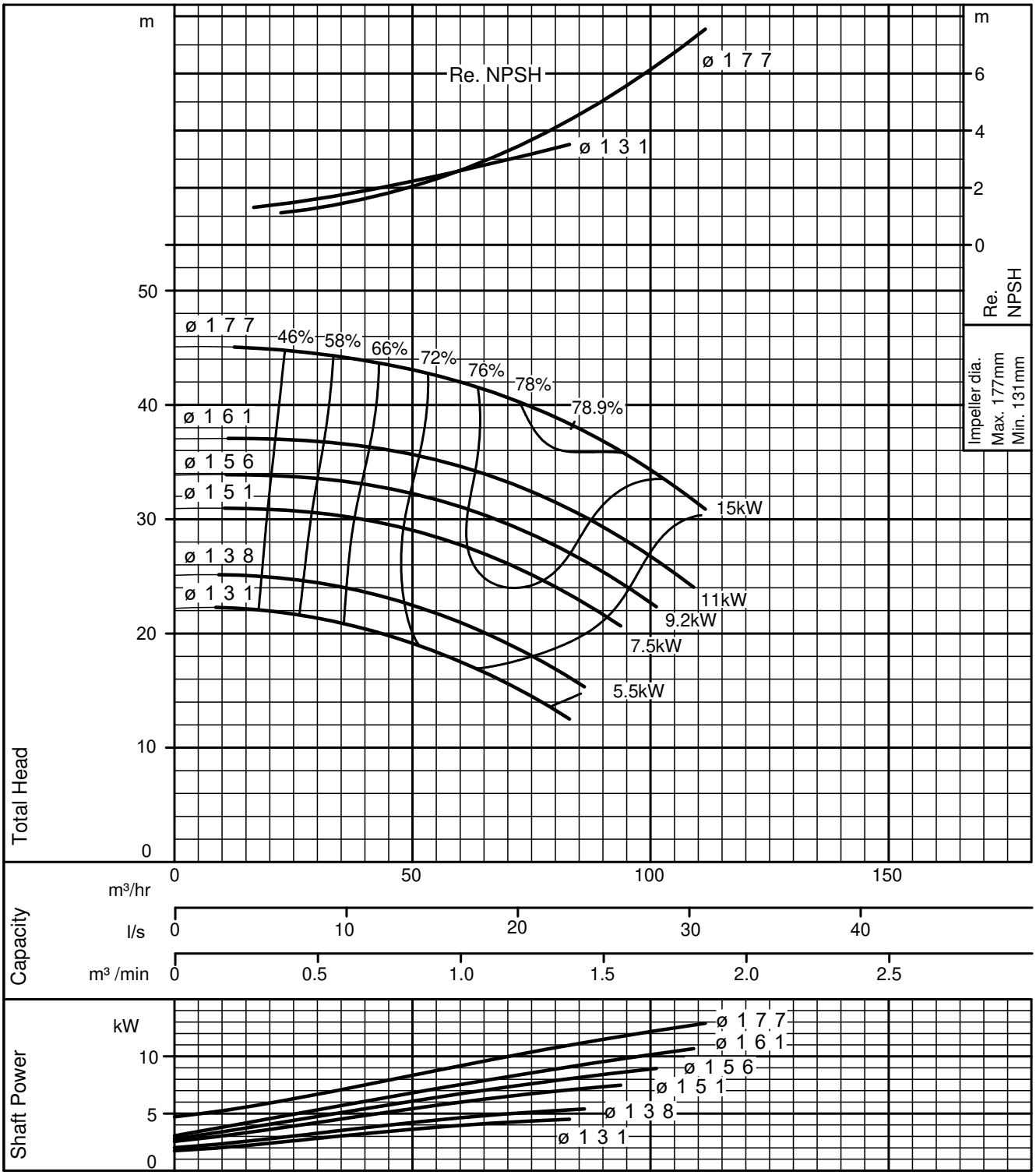

Performance Curve

GSD 50-200 (2 Pole)	MEI ≧ 0.7 Minimum Efficiency Index is based on full diamter impeller	According to ISO testing code 9906 Grade 3B
	50Hz (SYNCHRONOUS SPEED 3000min^{-1})	DENSITY = 1.0 kg/l - VISCOSITY = 1.0 mPa·s

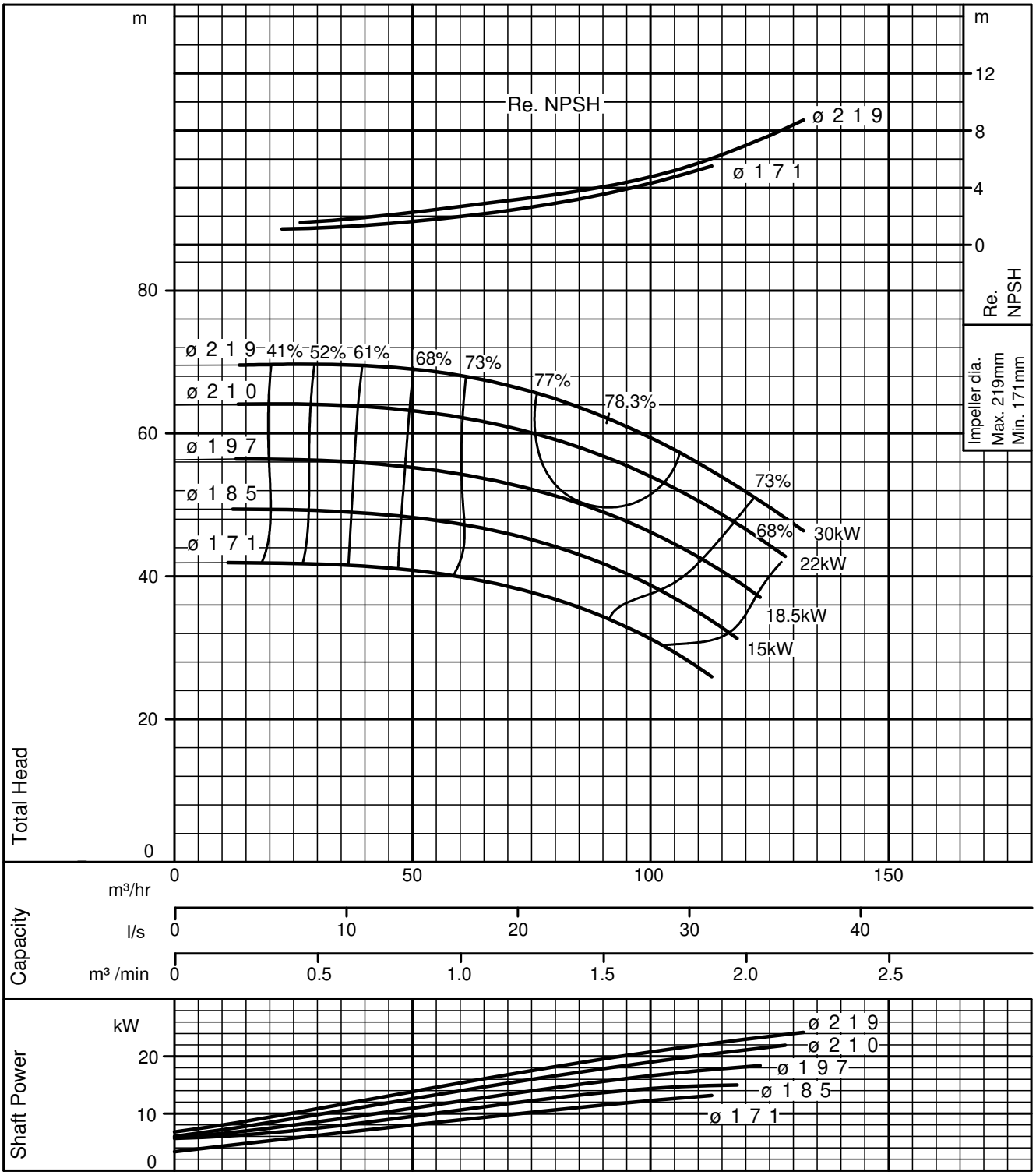

Performance Curve

GSD 50-250 (2 Pole)	MEI ≧ 0.7 Minimum Efficiency Index is based on full diamter impeller	According to ISO testing code 9906 Grade 3B
	50Hz (SYNCHRONOUS SPEED 3000min^{-1})	DENSITY = 1.0 kg/l - VISCOSITY = 1.0 mPa·s

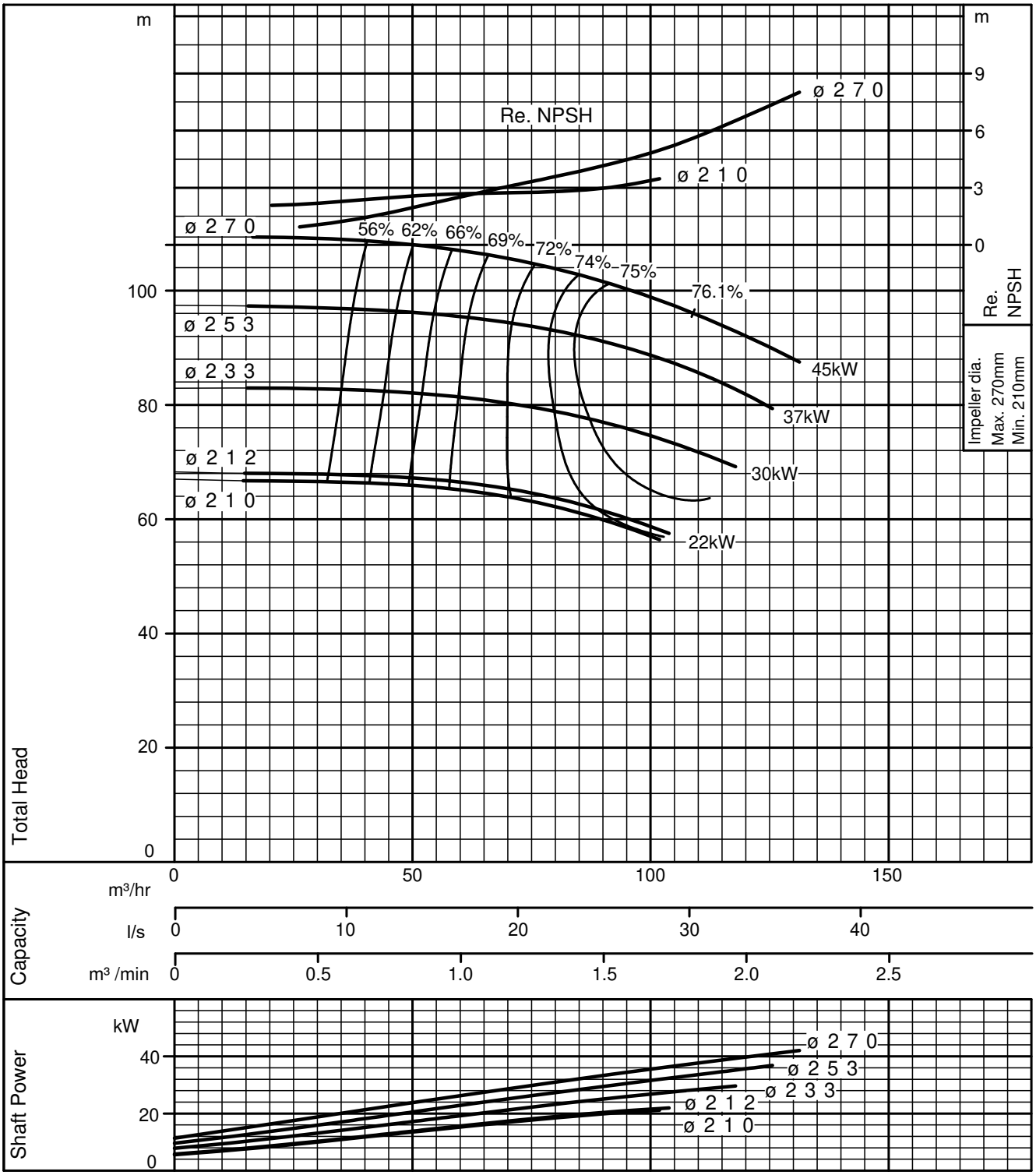

Performance Curve

GSD 50-315 (2 Pole)	MEI ≧ 0.7 Minimum Efficiency Index is based on full diamter impeller	According to ISO testing code 9906 Grade 3B
	50Hz (SYNCHRONOUS SPEED 3000min^{-1})	DENSITY = 1.0 kg/l - VISCOSITY = 1.0 mPa·s

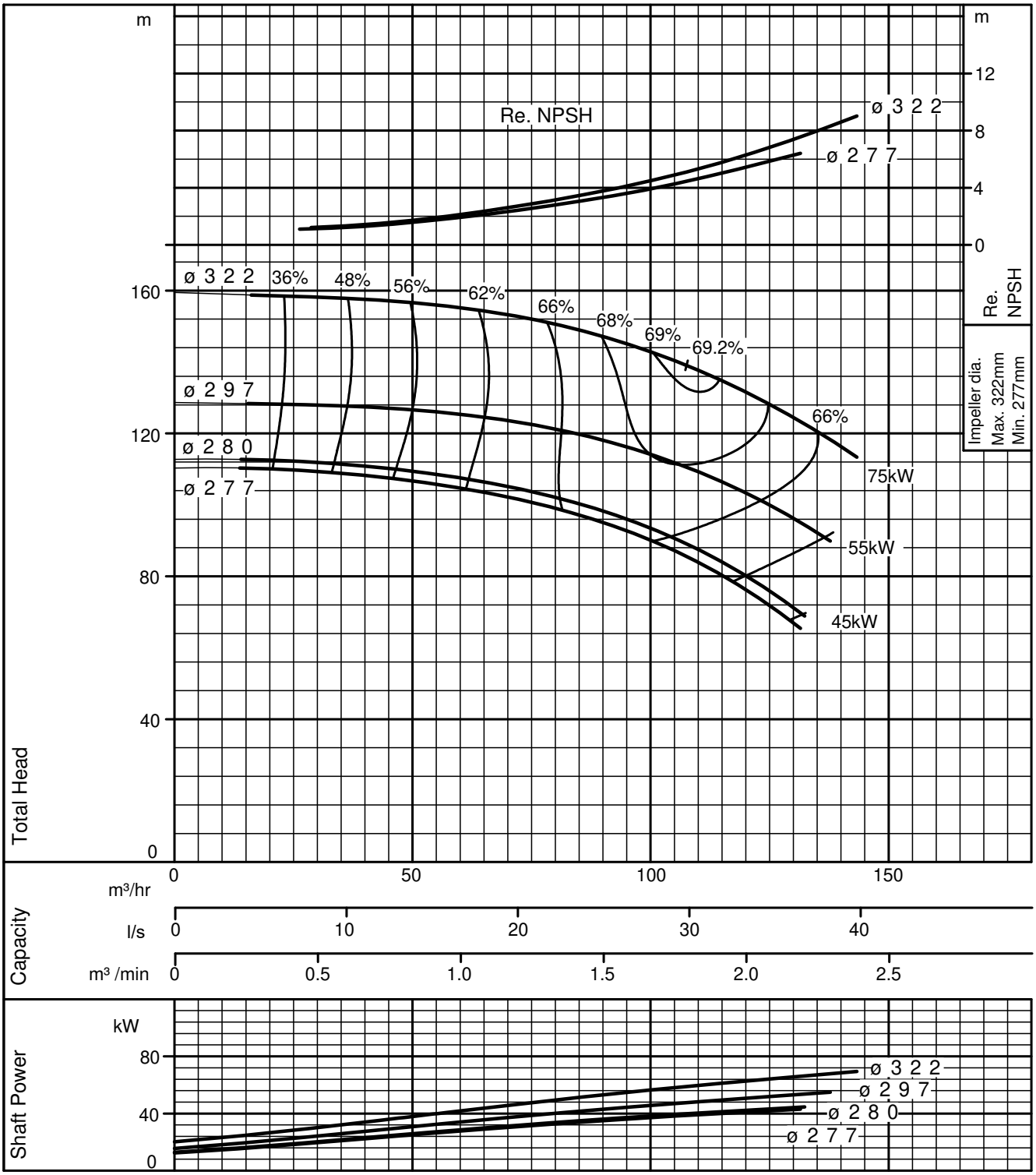

Performance Curve

GSD 65-125 (2 Pole)	MEI ≧ 0.7 Minimum Efficiency Index is based on full diamter impeller	According to ISO testing code 9906 Grade 3B
	50Hz (SYNCHRONOUS SPEED 3000min^{-1})	DENSITY = 1.0 kg/l - VISCOSITY = 1.0 mPa·s

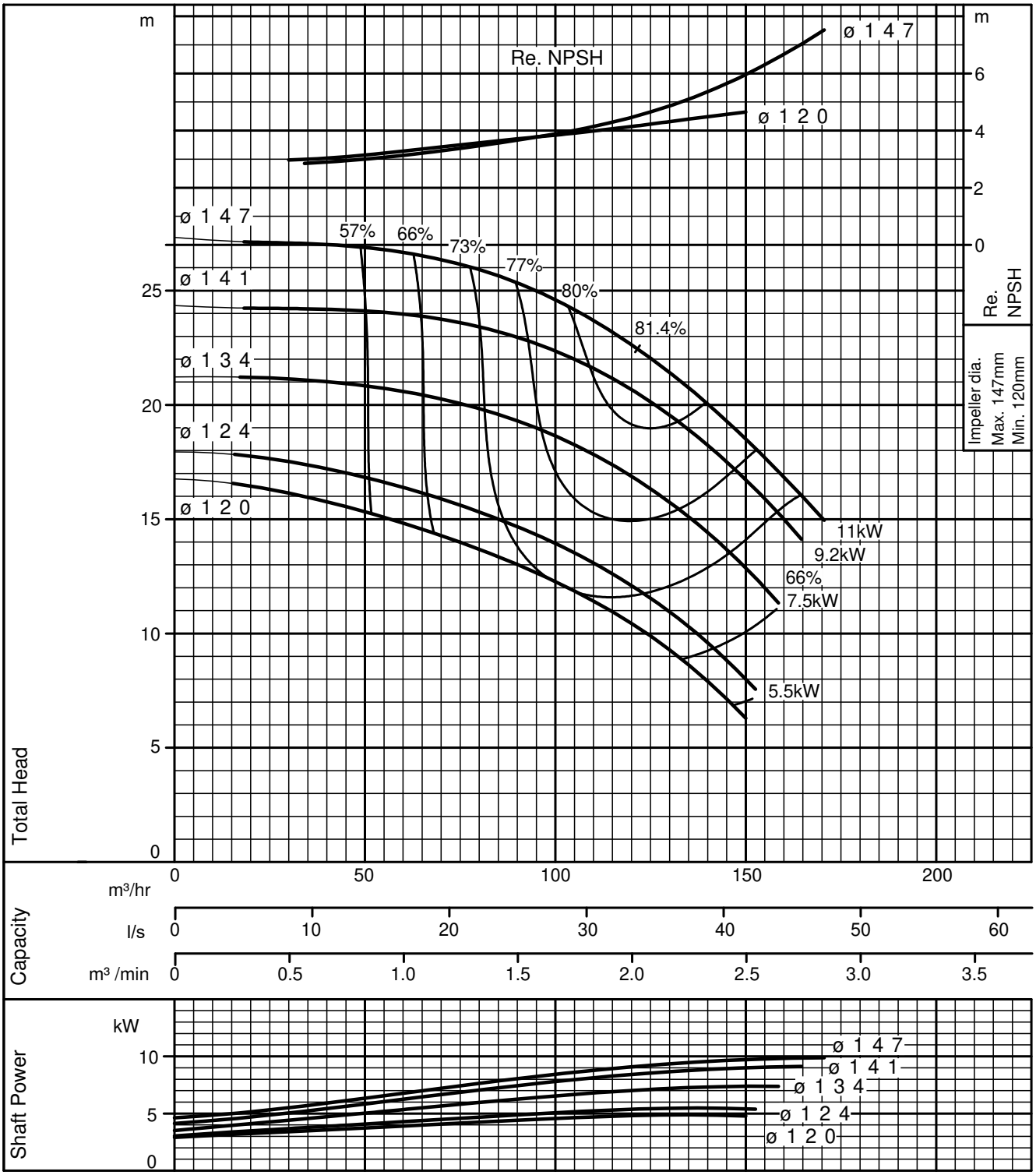

Performance Curve

GSD 65-160 (2 Pole)	MEI ≧ 0.7 Minimum Efficiency Index is based on full diamter impeller	According to ISO testing code 9906 Grade 3B
	50Hz (SYNCHRONOUS SPEED 3000min^{-1})	DENSITY = 1.0 kg/l - VISCOSITY = 1.0 mPa·s

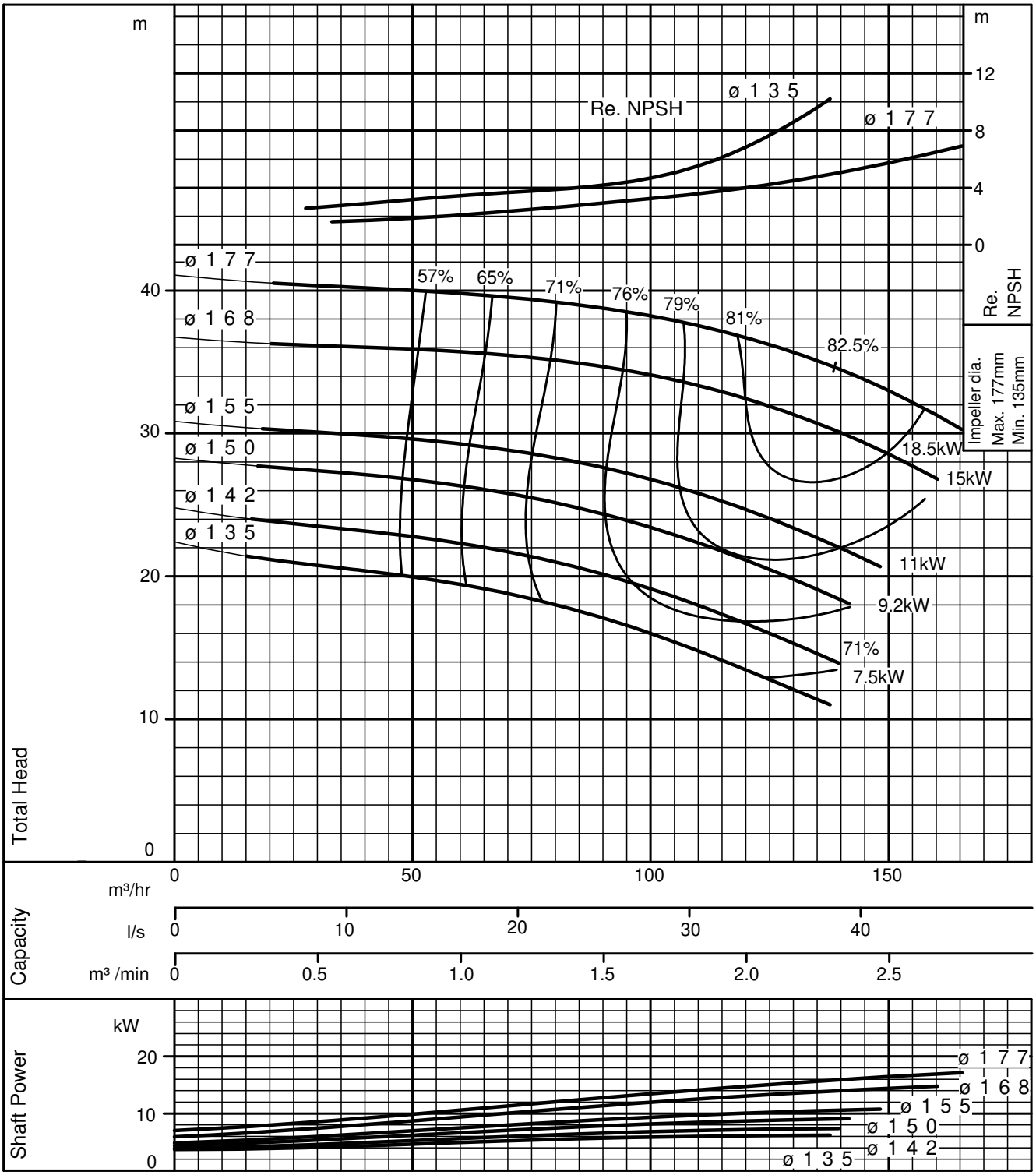

Performance Curve

GSD 65-200 (2 Pole)	MEI ≧ 0.7 Minimum Efficiency Index is based on full diamter impeller	According to ISO testing code 9906 Grade 3B
	50Hz (SYNCHRONOUS SPEED 3000min^{-1})	DENSITY = 1.0 kg/l - VISCOSITY = 1.0 mPa·s

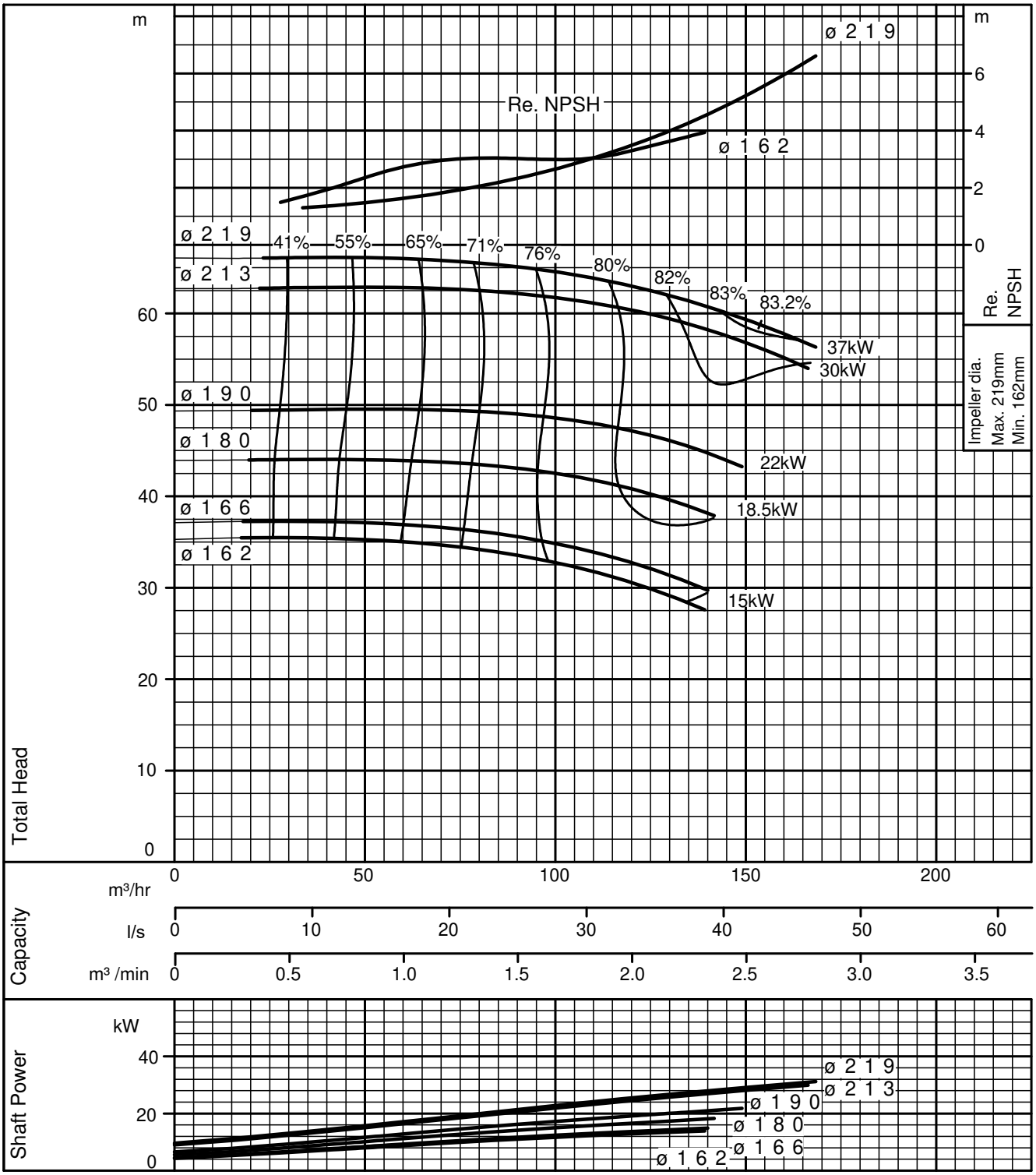

Performance Curve

GSD 65-250 (2 Pole)	MEI ≧ 0.7 Minimum Efficiency Index is based on full diamter impeller	According to ISO testing code 9906 Grade 3B
	50Hz (SYNCHRONOUS SPEED 3000min^{-1})	DENSITY = 1.0 kg/l - VISCOSITY = 1.0 mPa·s

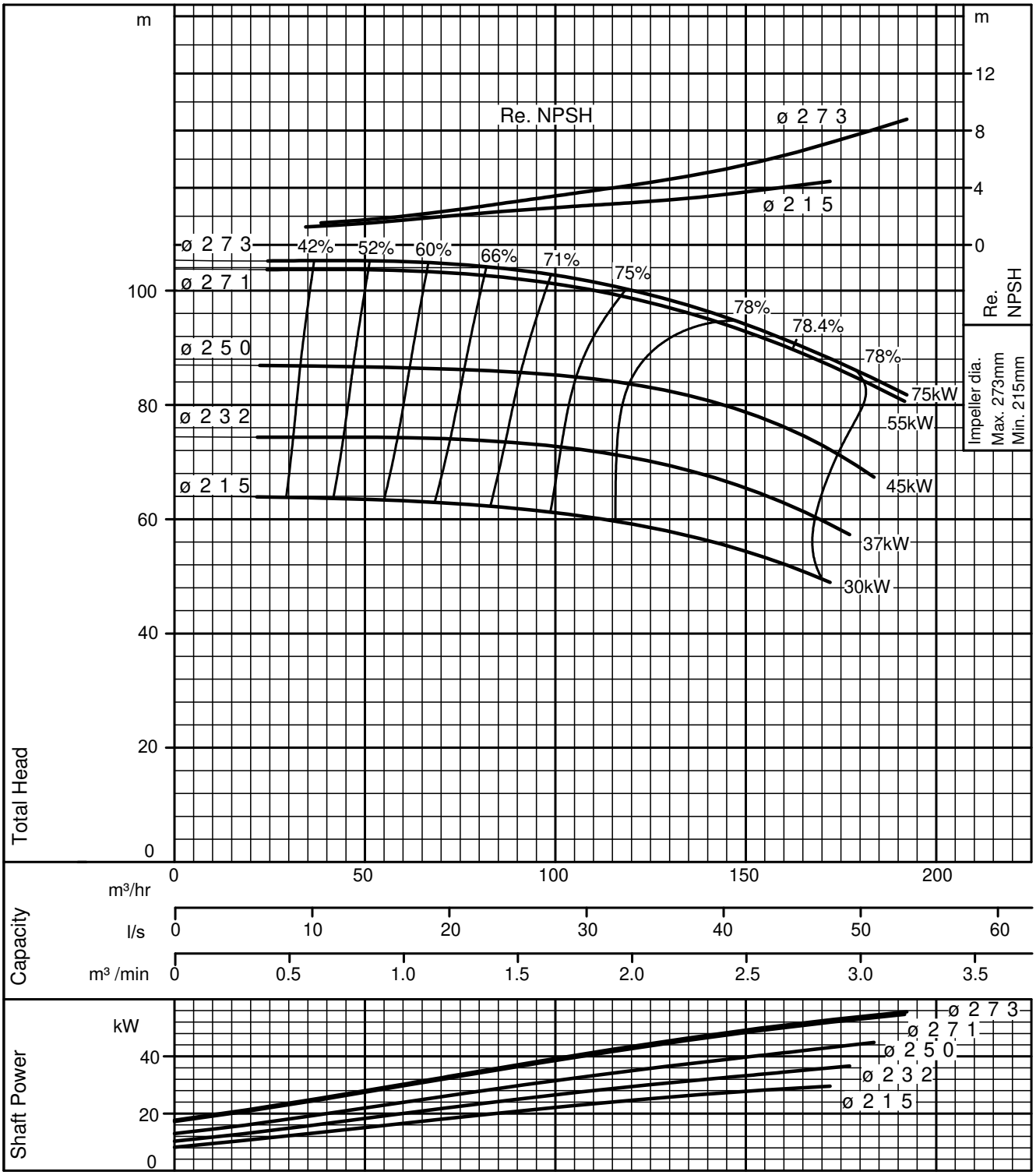

Performance Curve

GSD 65-315 (2 Pole)	MEI ≧ 0.7 Minimum Efficiency Index is based on full diamter impeller	According to ISO testing code 9906 Grade 3B
	50Hz (SYNCHRONOUS SPEED 3000min^{-1})	DENSITY = 1.0 kg/l - VISCOSITY = 1.0 mPa·s

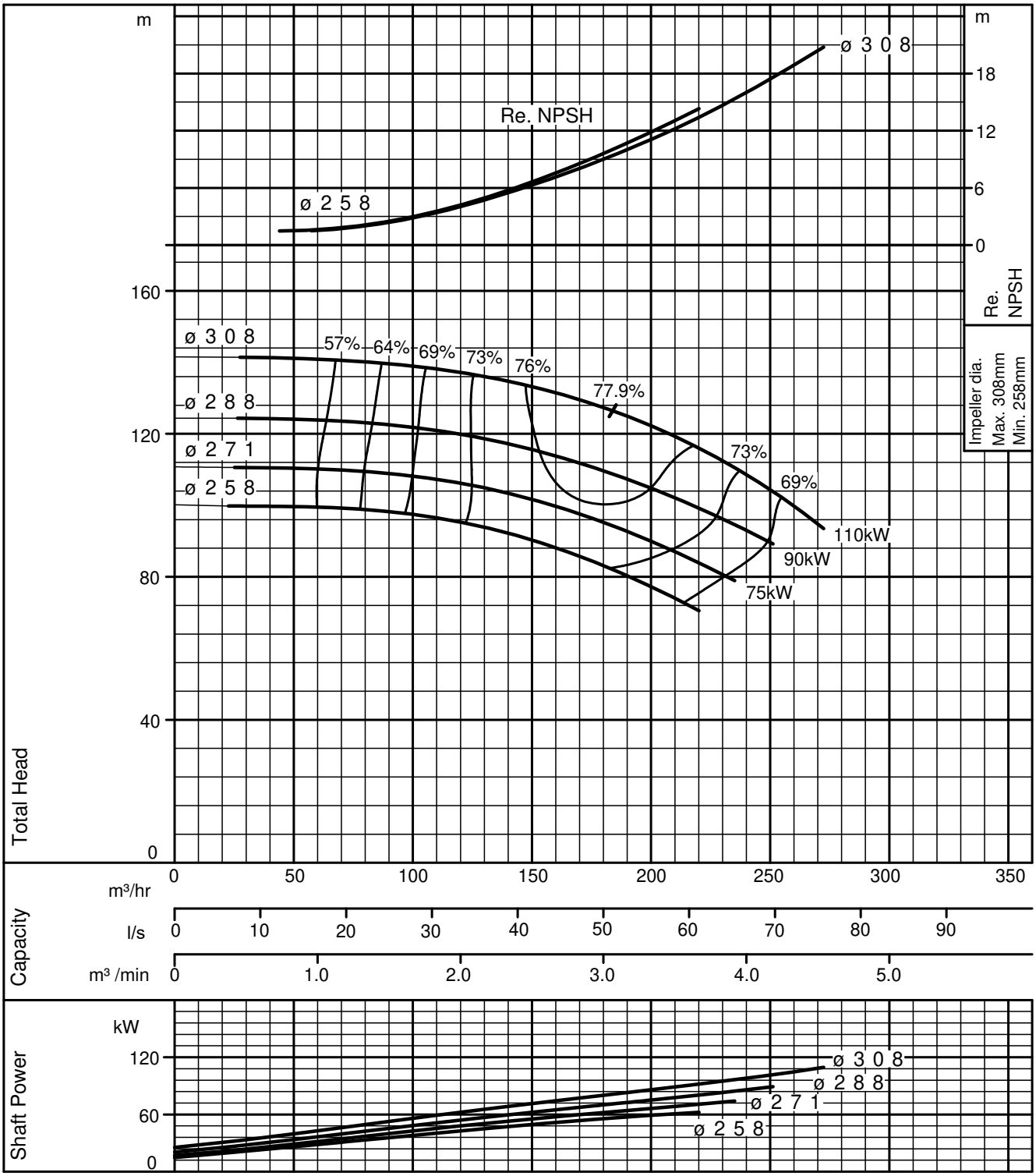

Performance Curve

GSD 80-160 (2 Pole)	MEI ≧ 0.7 Minimum Efficiency Index is based on full diamter impeller	According to ISO testing code 9906 Grade 3B
	50Hz (SYNCHRONOUS SPEED 3000min^{-1})	DENSITY = 1.0 kg/l - VISCOSITY = 1.0 mPa·s

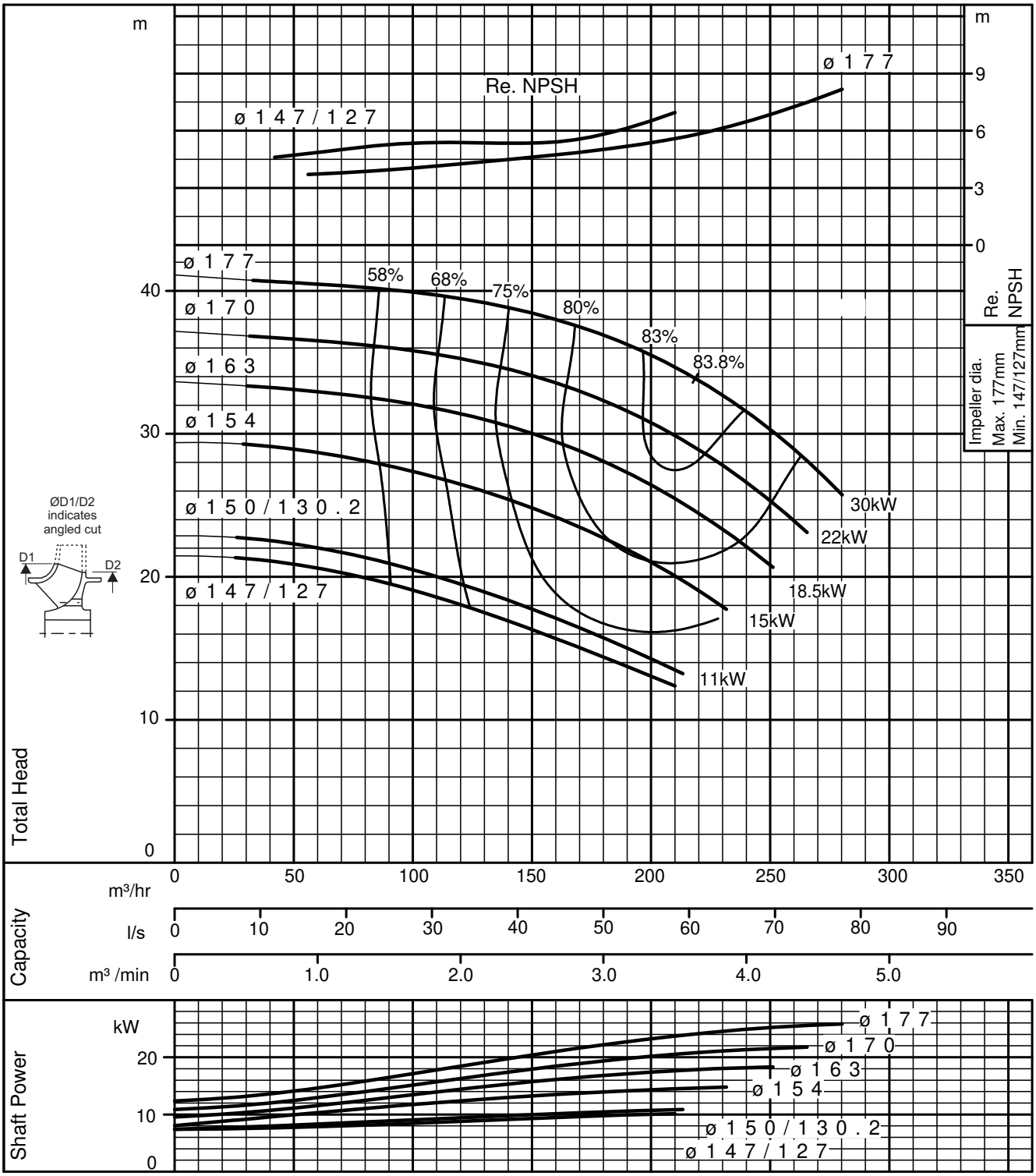

Performance Curve

GSD 80-200 (2 Pole)	MEI ≧ 0.7 Minimum Efficiency Index is based on full diamter impeller	According to ISO testing code 9906 Grade 3B
	50Hz (SYNCHRONOUS SPEED 3000min^{-1})	DENSITY = 1.0 kg/l - VISCOSITY = 1.0 mPa·s

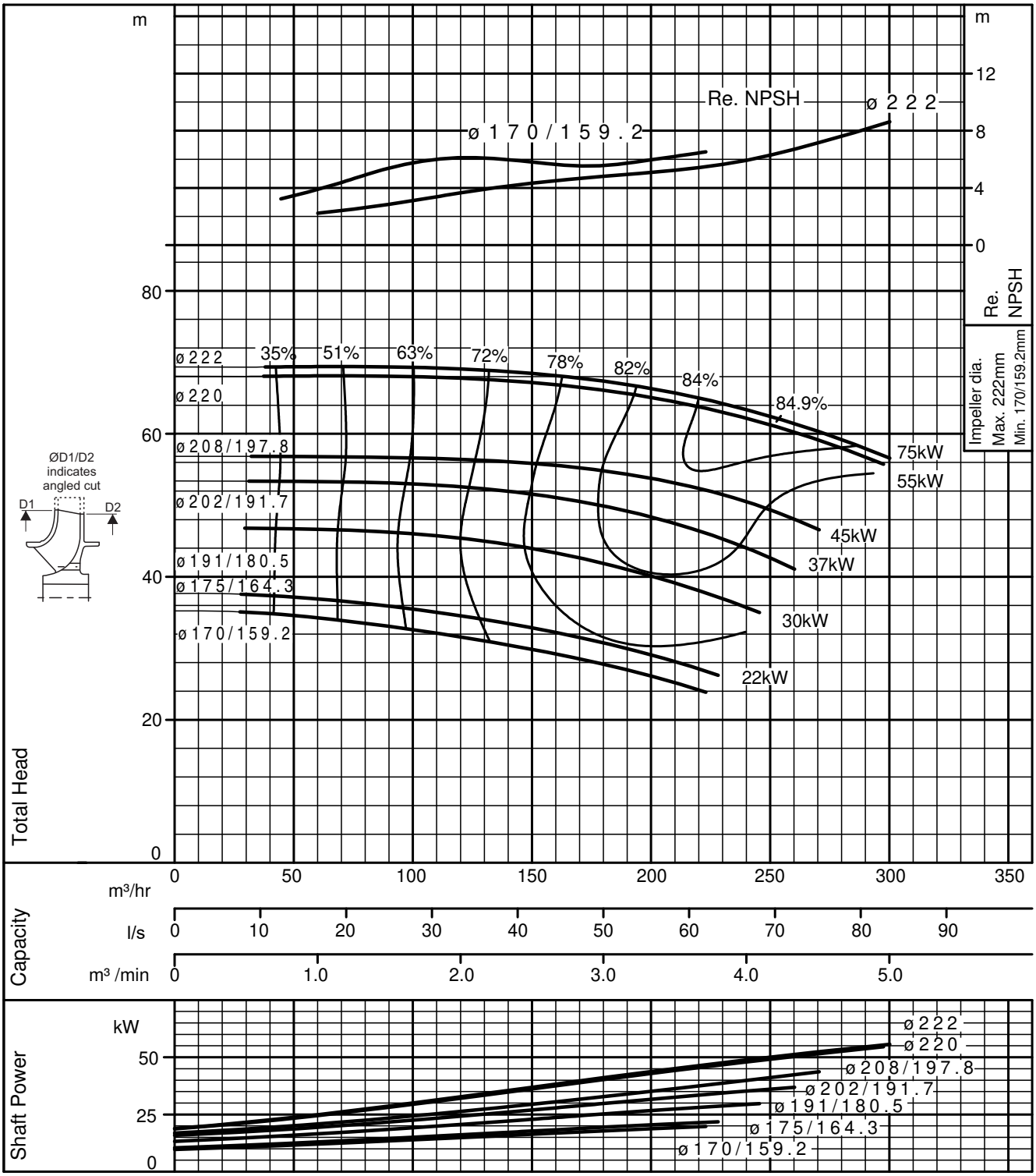

Performance Curve

GSD 80-250 (2 Pole)	MEI ≧ 0.7 Minimum Efficiency Index is based on full diamter impeller	According to ISO testing code 9906 Grade 3B
	50Hz (SYNCHRONOUS SPEED 3000min^{-1})	DENSITY = 1.0 kg/l - VISCOSITY = 1.0 mPa·s

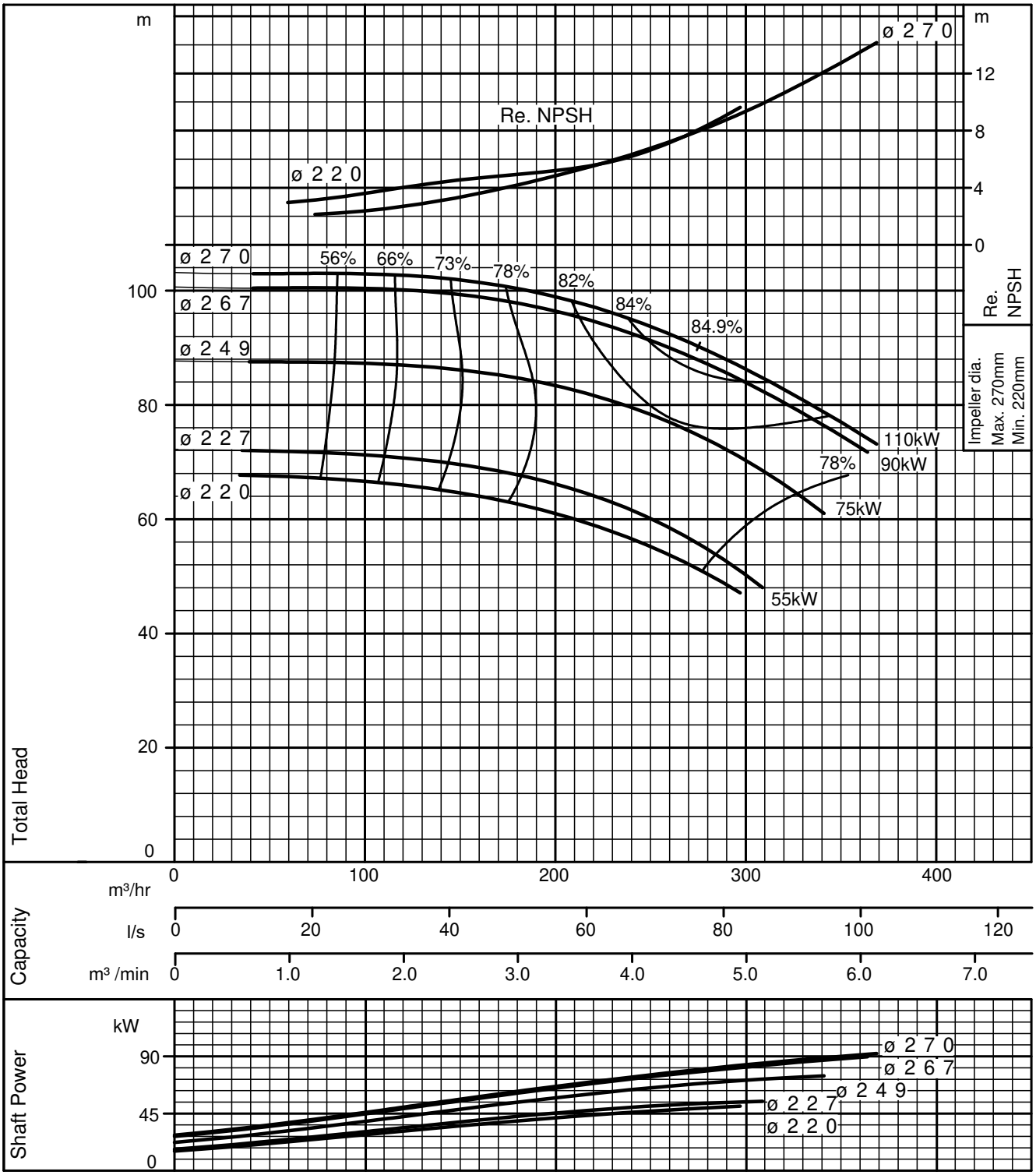

Performance Curve

GSD 100-160 (2 Pole)	MEI ≧ 0.6 Minimum Efficiency Index is based on full diamter impeller	According to ISO testing code 9906 Grade 3B
	50Hz (SYNCHRONOUS SPEED 3000min^{-1})	DENSITY = 1.0 kg/l - VISCOSITY = 1.0 mPa·s

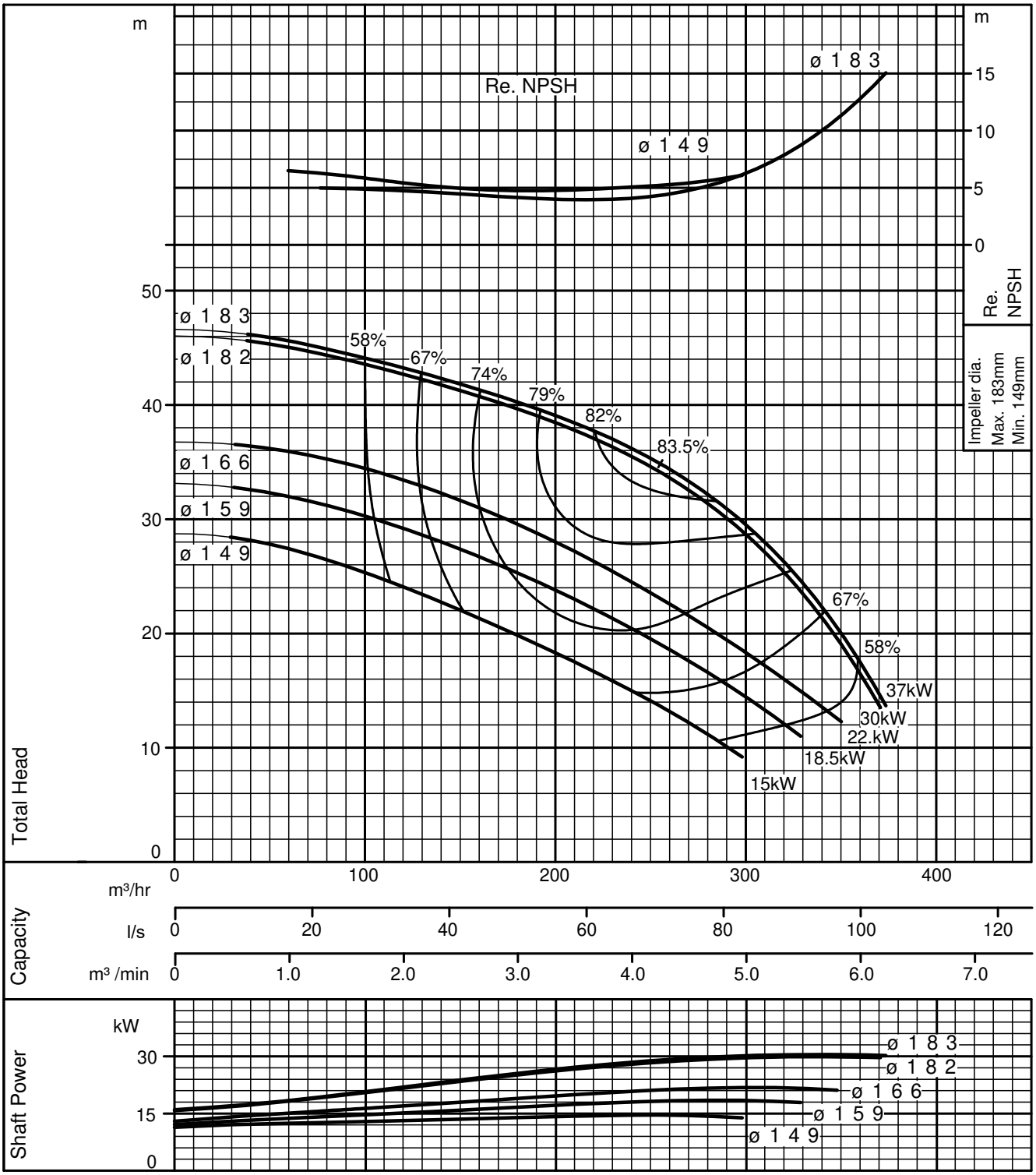

Performance Curve

GSD 100-200 (2 Pole)	MEI ≧ 0.7 Minimum Efficiency Index is based on full diamter impeller	According to ISO testing code 9906 Grade 3B
	50Hz (SYNCHRONOUS SPEED 3000min^{-1})	DENSITY = 1.0 kg/l - VISCOSITY = 1.0 mPa·s

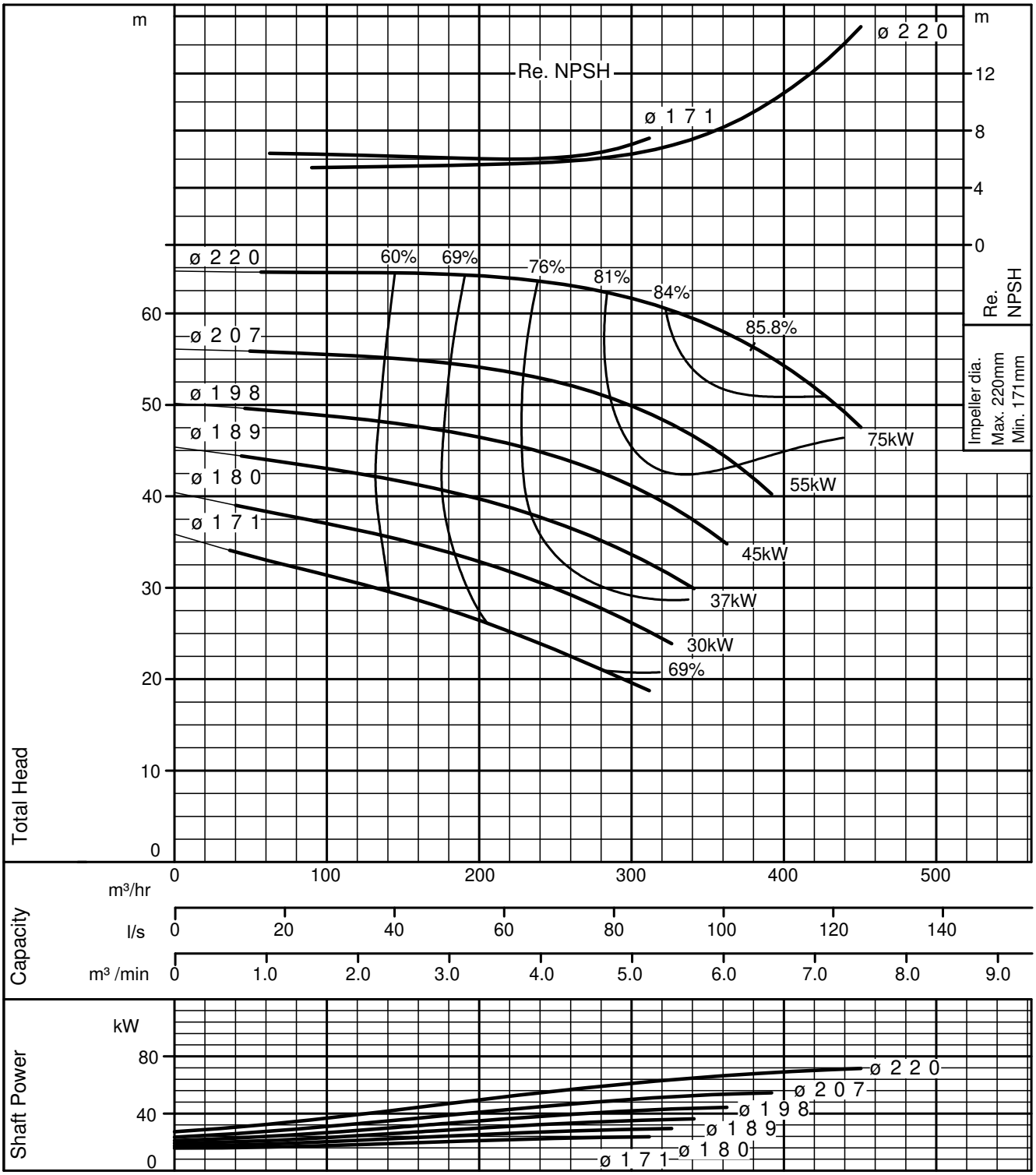

Performance Curve

GSD 100-250 (2 Pole)	MEI ≧ 0.7 Minimum Efficiency Index is based on full diamter impeller	According to ISO testing code 9906 Grade 3B
	50Hz (SYNCHRONOUS SPEED 3000min^{-1})	DENSITY = 1.0 kg/l - VISCOSITY = 1.0 mPa·s

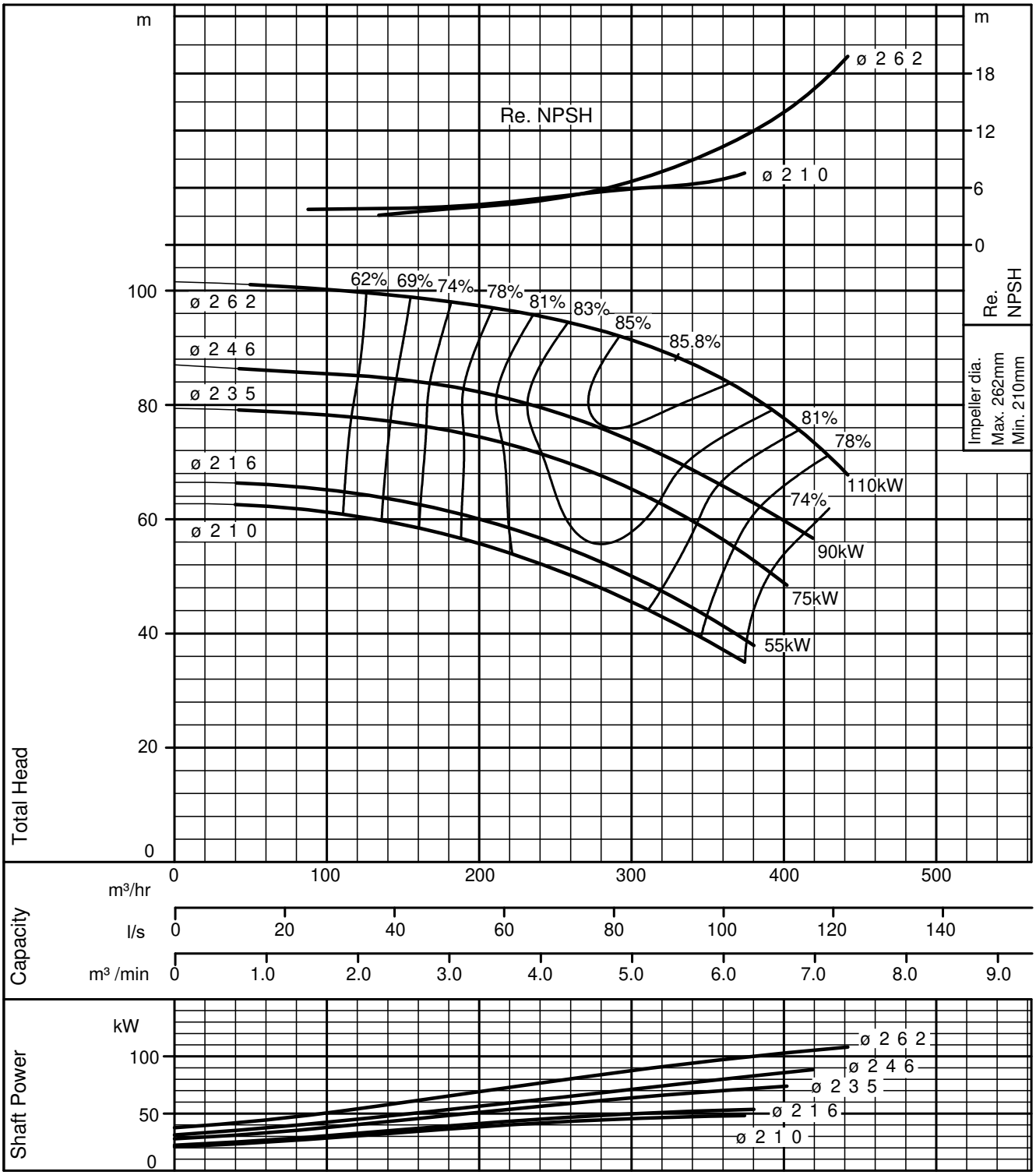

Performance Curve

GSD 125-200 (2 Pole)	MEI ≧ 0.7 Minimum Efficiency Index is based on full diamter impeller	According to ISO testing code 9906 Grade 3B
	50Hz (SYNCHRONOUS SPEED 3000min^{-1})	DENSITY = 1.0 kg/l - VISCOSITY = 1.0 mPa·s

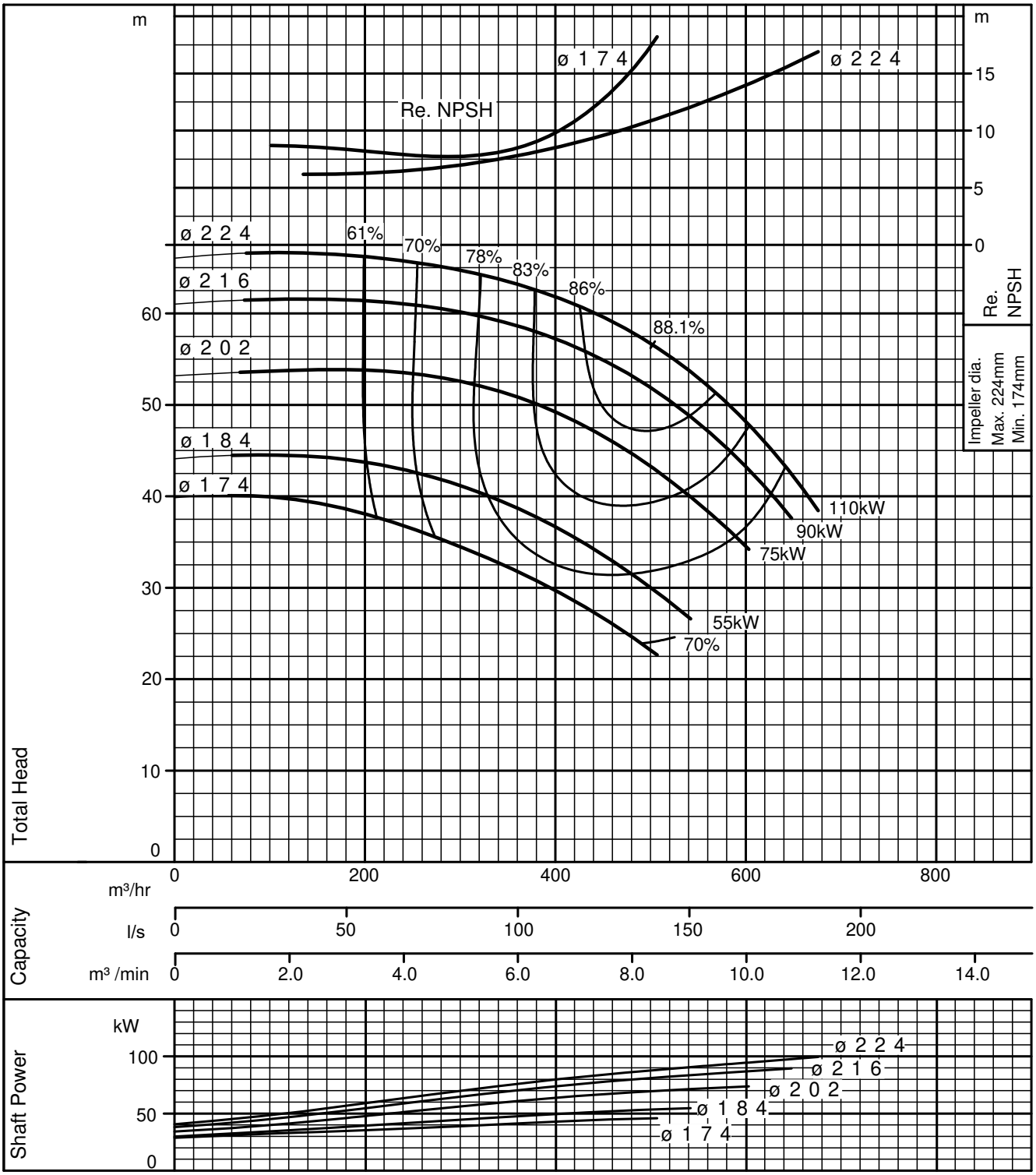

Performance Curve

GSD 150-200 (2 Pole)	MEI ≧ 0.7 Minimum Efficiency Index is based on full diamter impeller	According to ISO testing code 9906 Grade 3B
	50Hz (SYNCHRONOUS SPEED 3000min^{-1})	DENSITY = 1.0 kg/l - VISCOSITY = 1.0 mPa·s

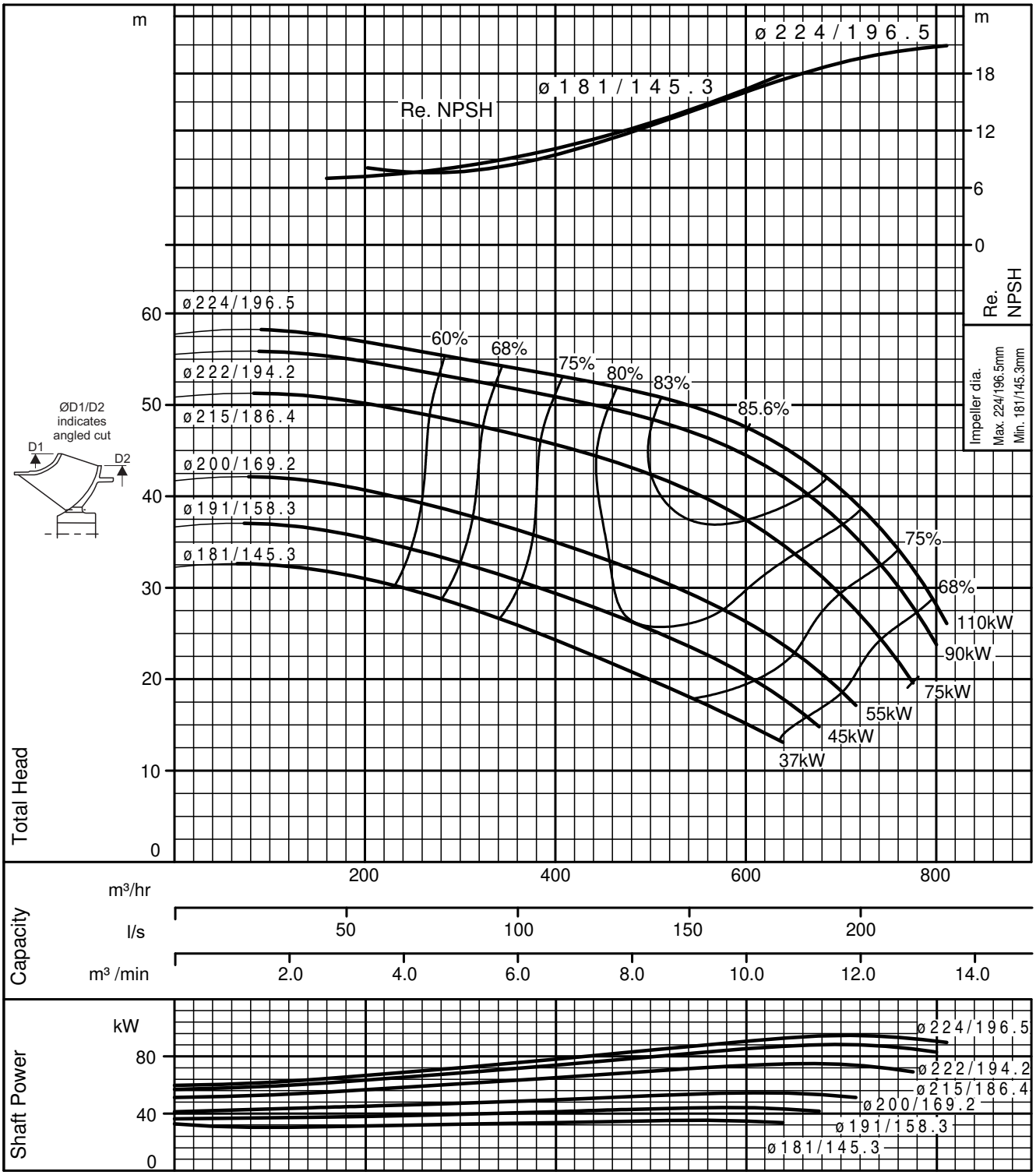

Performance Curve

GSD 32-200 (4 Pole)	MEI ≧ 0.7 Minimum Efficiency Index is based on full diamter impeller	According to ISO testing code 9906 Grade 3B
	50Hz (SYNCHRONOUS SPEED 1500min^{-1})	DENSITY = 1.0 kg/l - VISCOSITY = 1.0 mPa·s

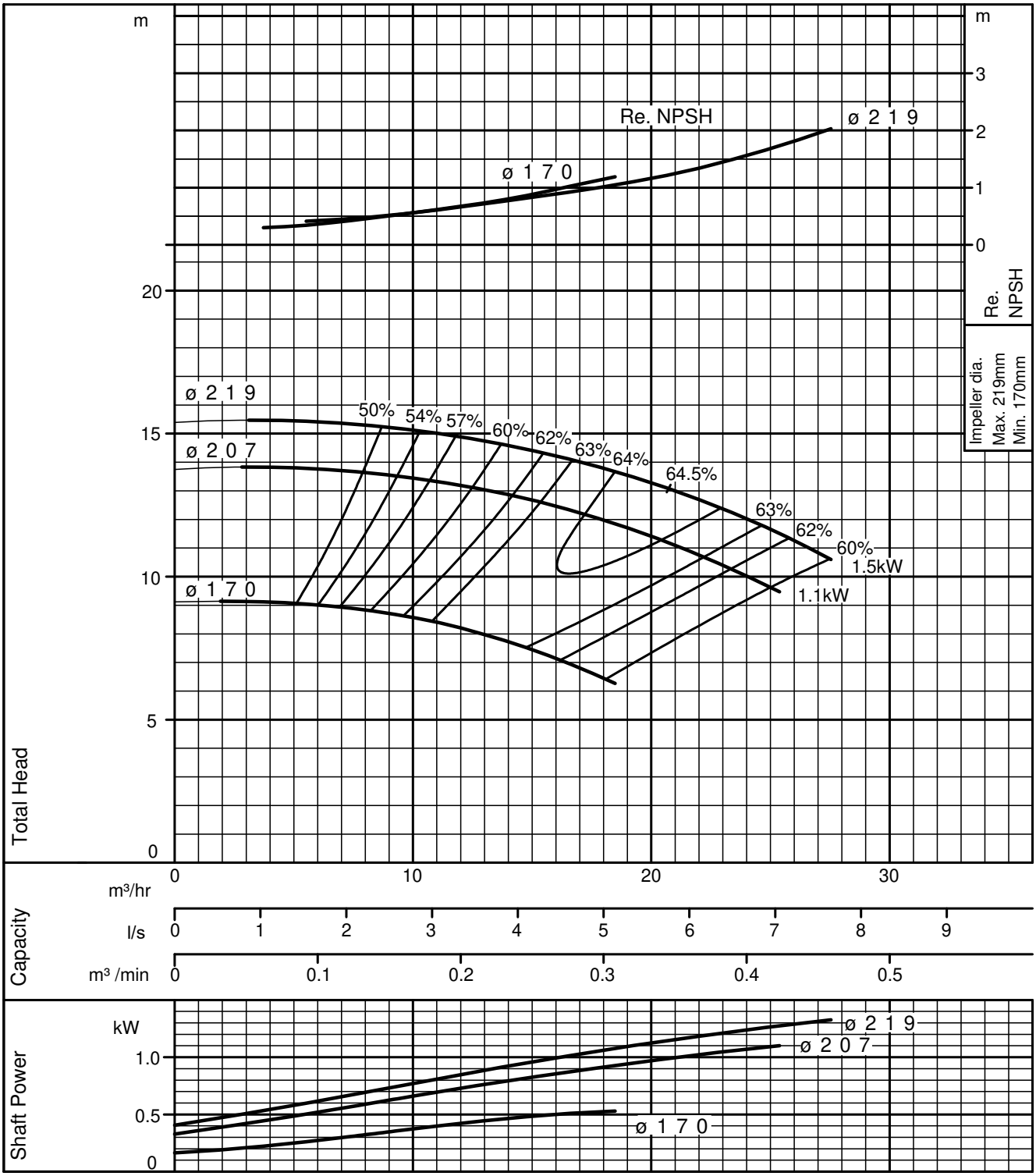

Performance Curve

GSD 32-250 (4 Pole)	MEI ≧ 0.7 Minimum Efficiency Index is based on full diamter impeller	According to ISO testing code 9906 Grade 3B
	50Hz (SYNCHRONOUS SPEED 1500min^{-1})	DENSITY = 1.0 kg/l - VISCOSITY = 1.0 mPa·s

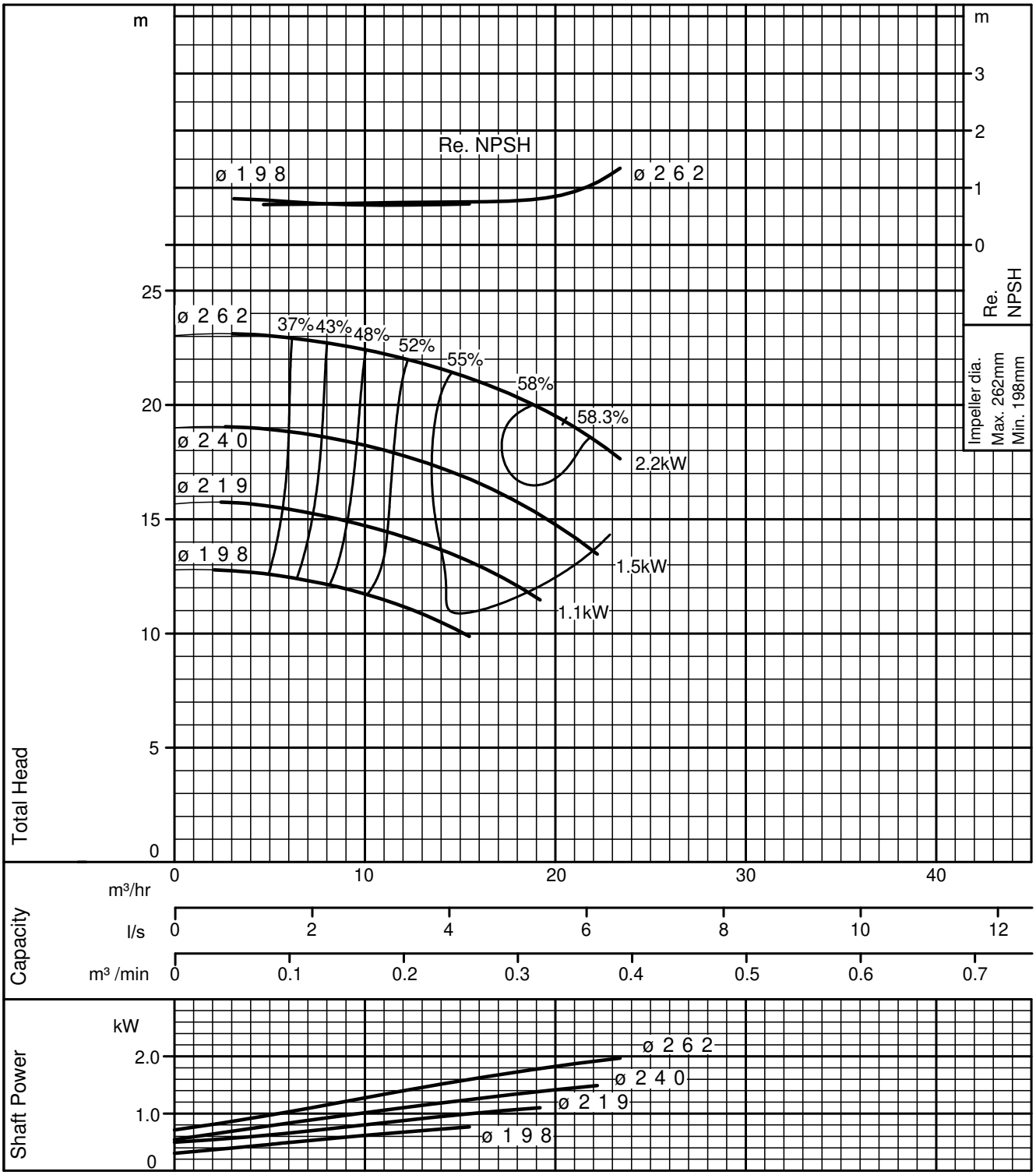

Performance Curve

GSD 40-160 (4 Pole)	MEI ≧ 0.7 Minimum Efficiency Index is based on full diamter impeller	According to ISO testing code 9906 Grade 3B
	50Hz (SYNCHRONOUS SPEED 1500min^{-1})	DENSITY = 1.0 kg/l - VISCOSITY = 1.0 mPa·s

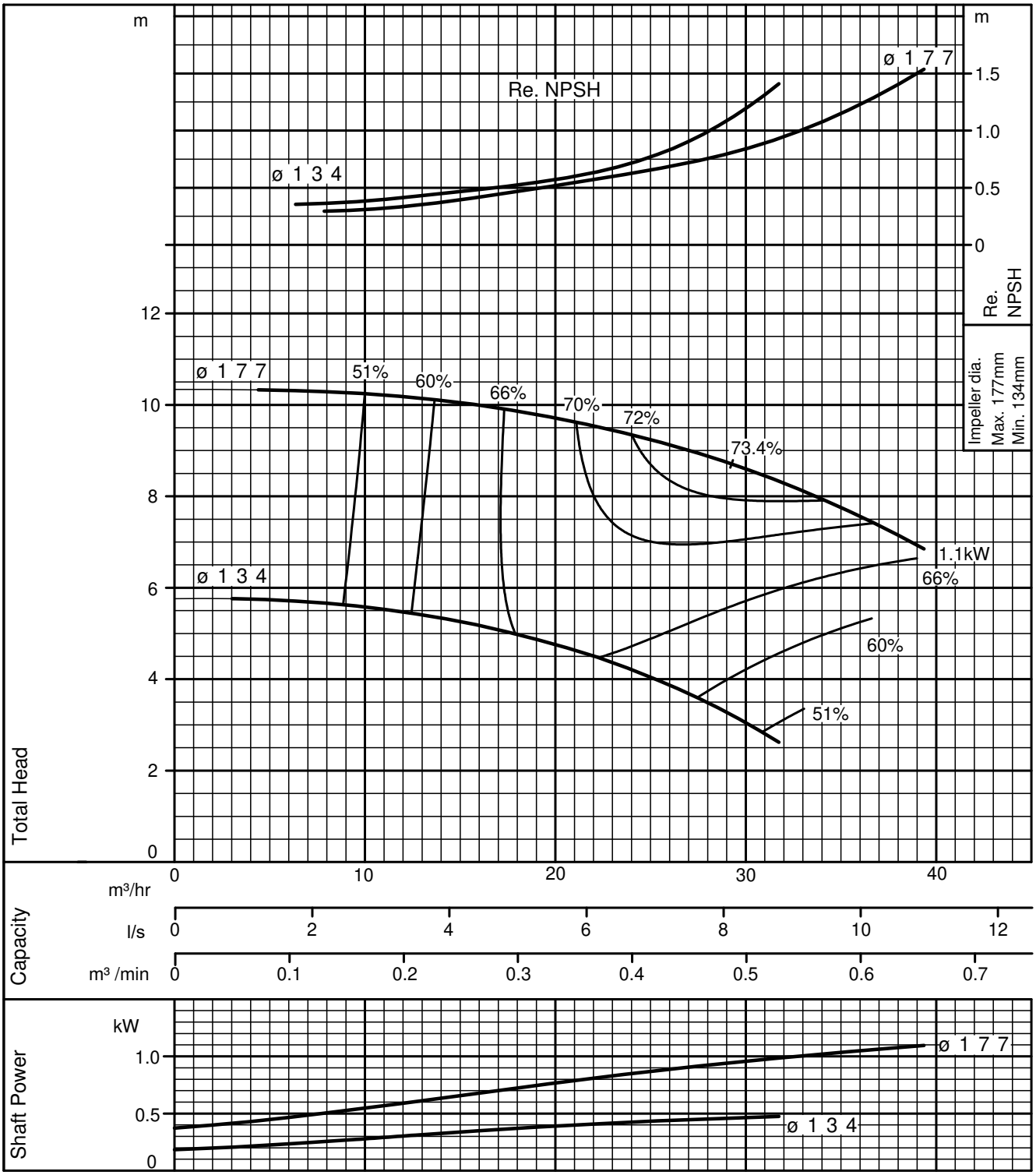

Performance Curve

GSD 40-200 (4 Pole)	MEI ≧ 0.7 Minimum Efficiency Index is based on full diamter impeller	According to ISO testing code 9906 Grade 3B
	50Hz (SYNCHRONOUS SPEED 1500min^{-1})	DENSITY = 1.0 kg/l - VISCOSITY = 1.0 mPa·s

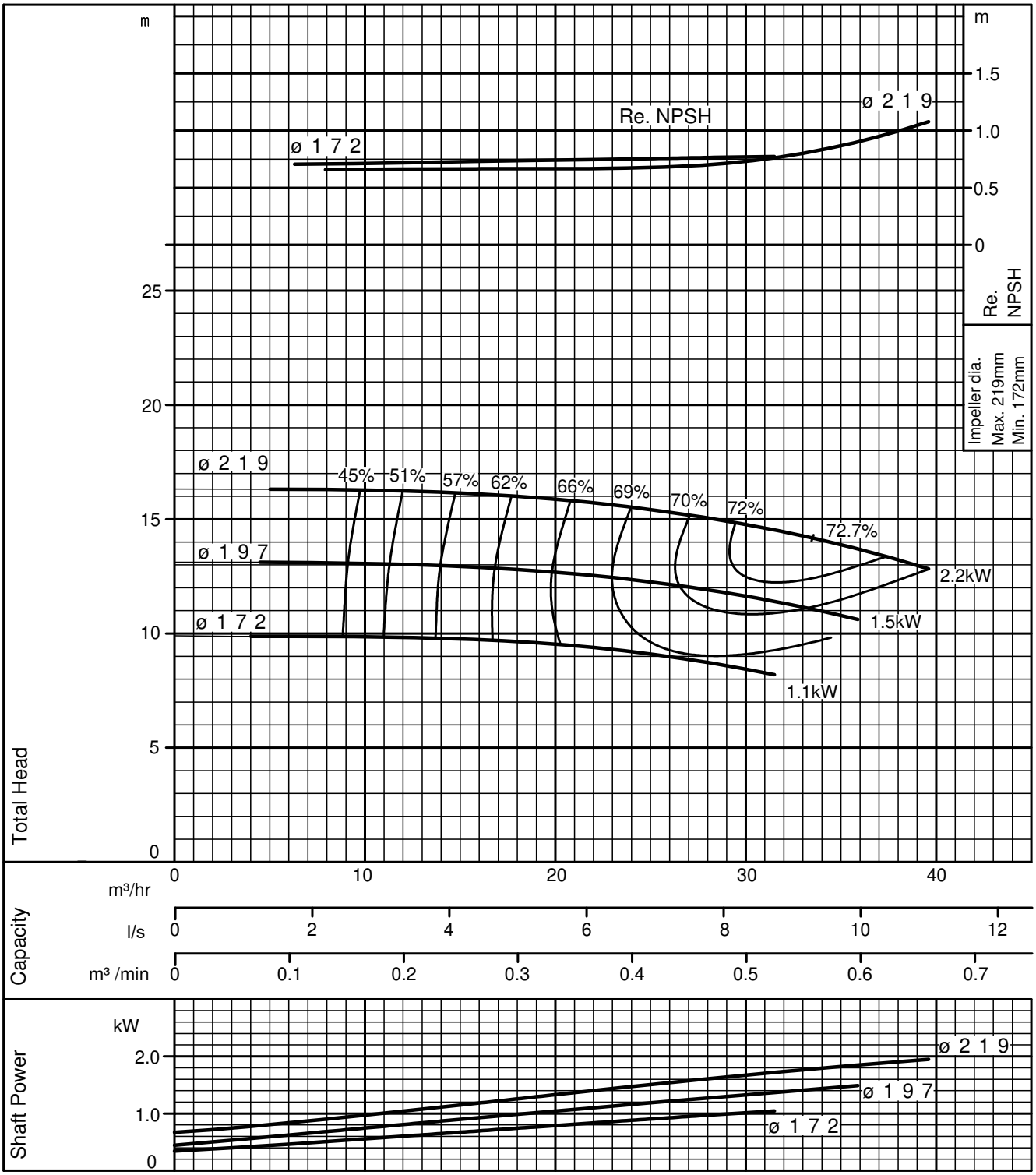

Performance Curve

GSD 40-250 (4 Pole)	MEI ≧ 0.7 Minimum Efficiency Index is based on full diamter impeller	According to ISO testing code 9906 Grade 3B
	50Hz (SYNCHRONOUS SPEED 1500min^{-1})	DENSITY = 1.0 kg/l - VISCOSITY = 1.0 mPa·s

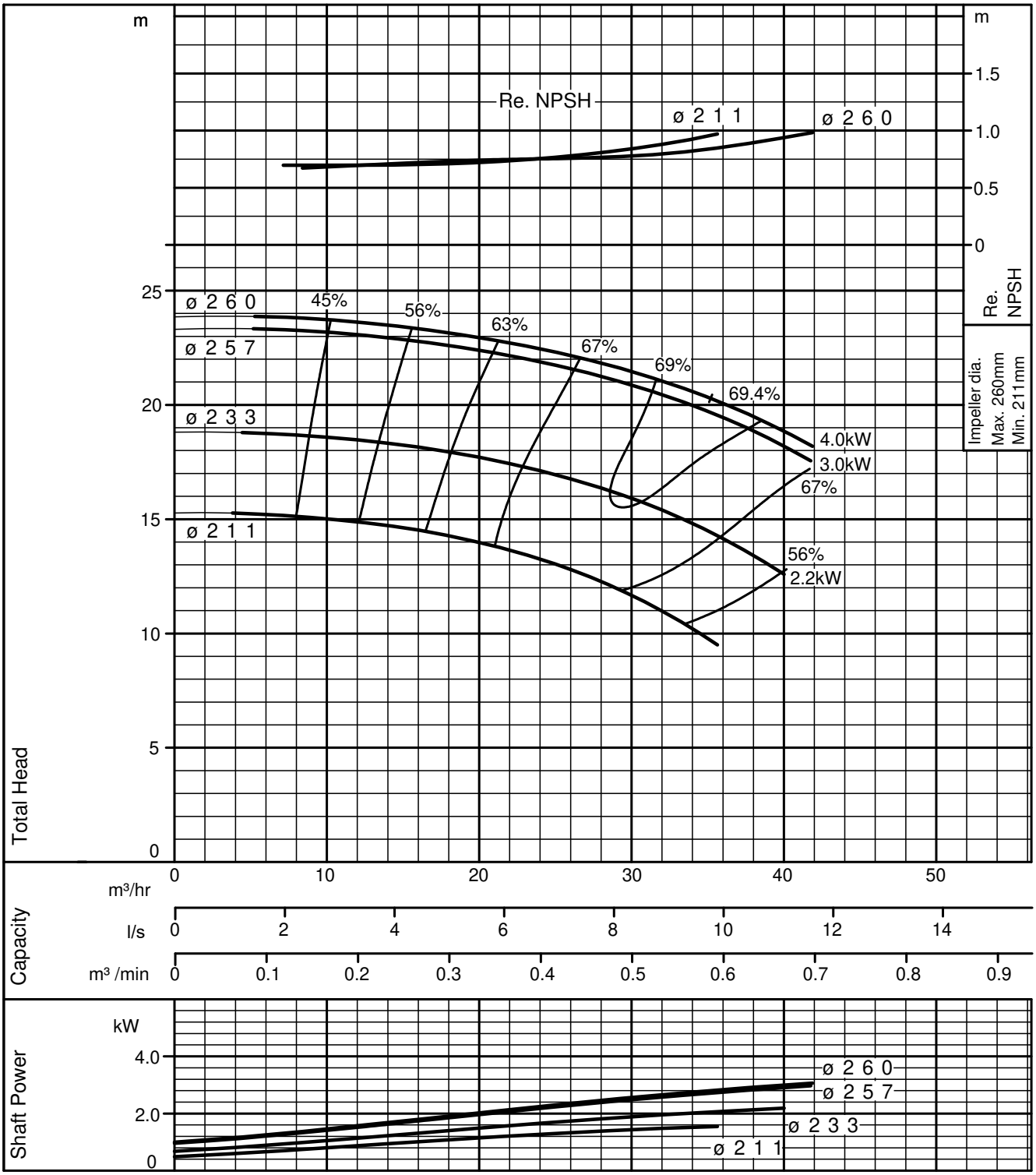

Performance Curve

GSD 40-315 (4 Pole)	MEI ≧ 0.7 Minimum Efficiency Index is based on full diamter impeller	According to ISO testing code 9906 Grade 3B
	50Hz (SYNCHRONOUS SPEED 1500min^{-1})	DENSITY = 1.0 kg/l - VISCOSITY = 1.0 mPa·s

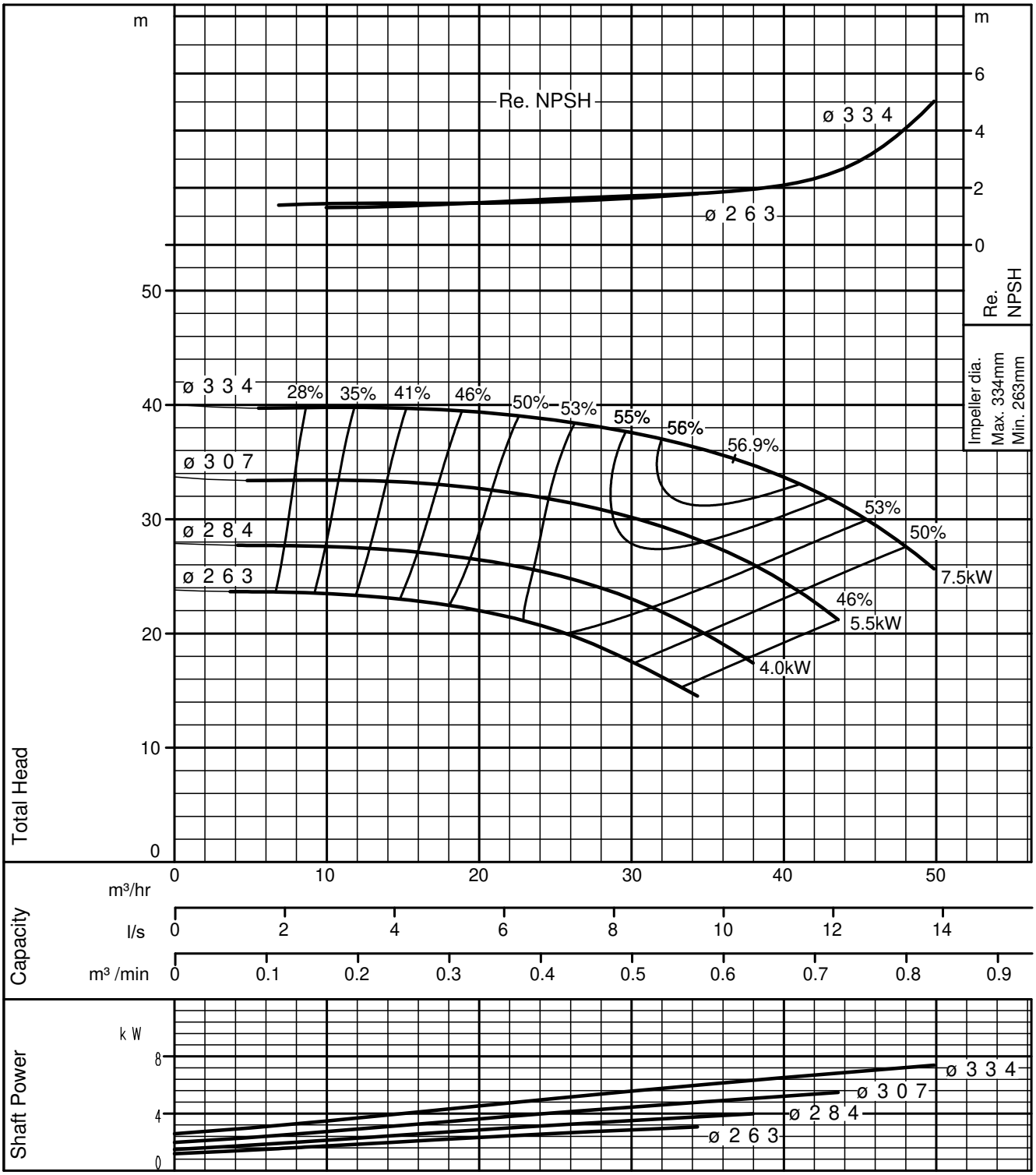

Performance Curve

GSD 50-125 (4 Pole)	MEI ≧ 0.7 Minimum Efficiency Index is based on full diamter impeller	According to ISO testing code 9906 Grade 3B
	50Hz (SYNCHRONOUS SPEED 1500min^{-1})	DENSITY = 1.0 kg/l - VISCOSITY = 1.0 mPa·s

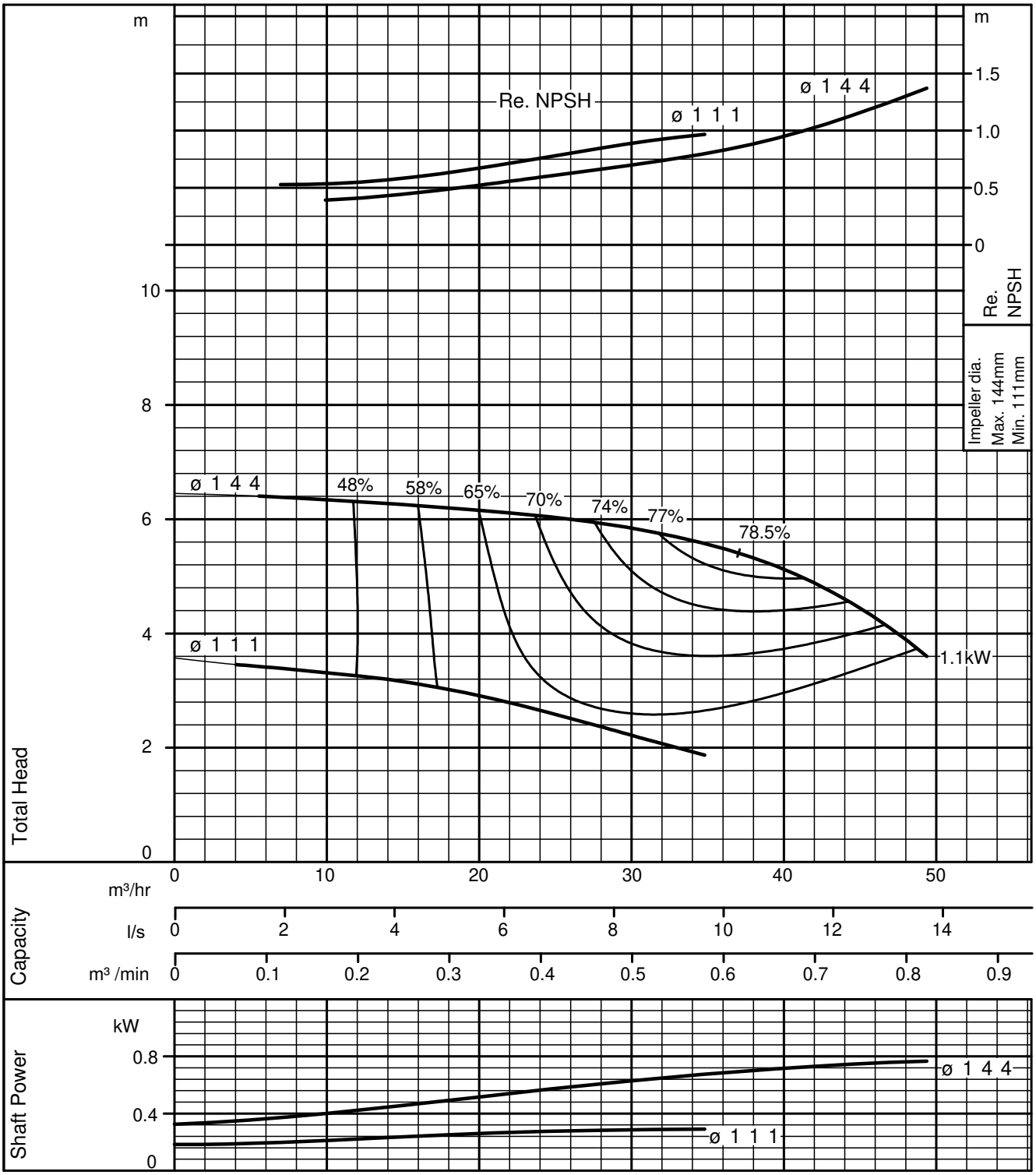

Performance Curve

GSD 50-160 (4 Pole)	MEI ≧ 0.7 Minimum Efficiency Index is based on full diamter impeller	According to ISO testing code 9906 Grade 3B
	50Hz (SYNCHRONOUS SPEED 1500min^{-1})	DENSITY = 1.0 kg/l - VISCOSITY = 1.0 mPa·s

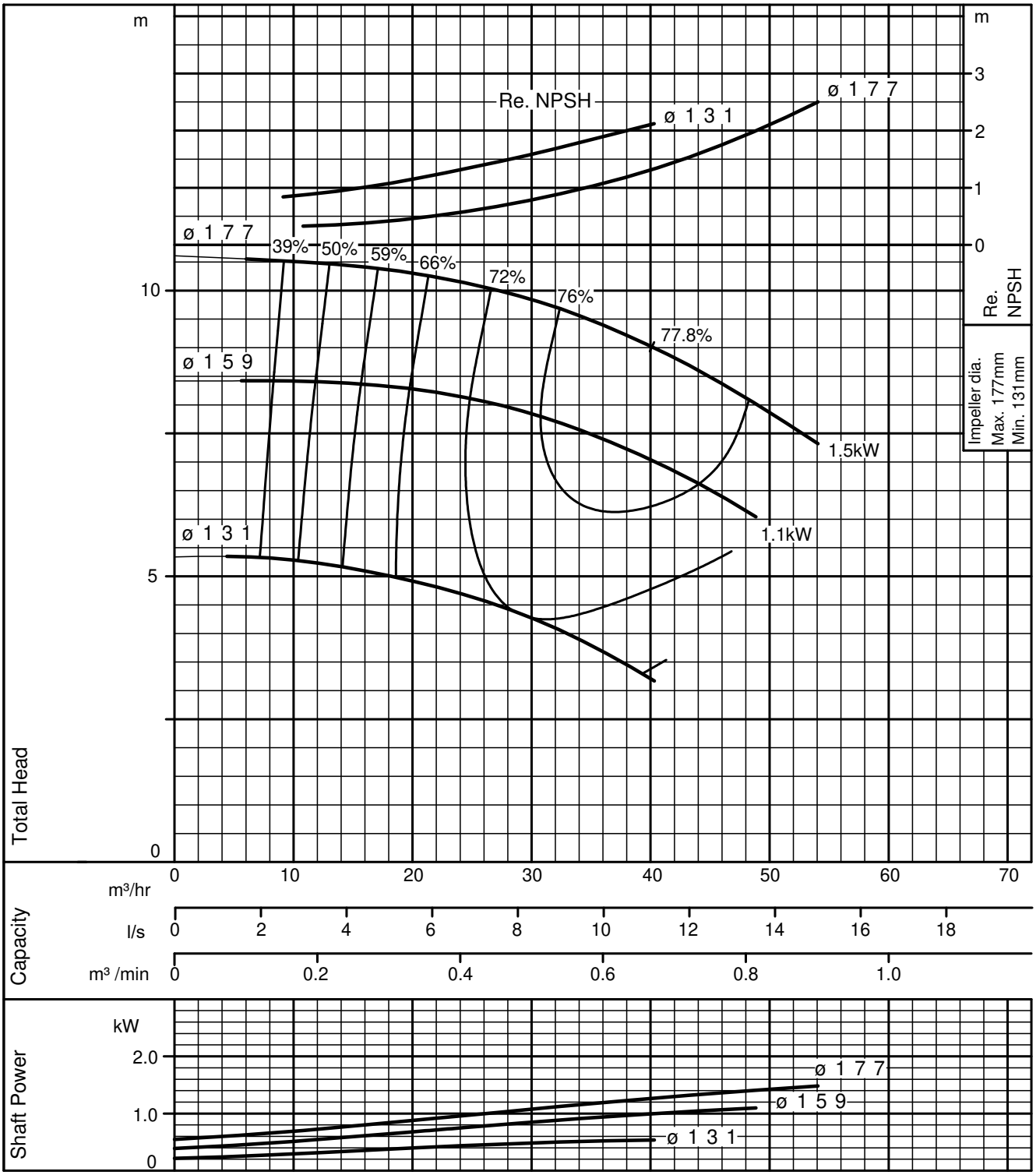

Performance Curve

GSD 50-200 (4 Pole)	MEI ≧ 0.7 Minimum Efficiency Index is based on full diamter impeller	According to ISO testing code 9906 Grade 3B
	50Hz (SYNCHRONOUS SPEED 1500min^{-1})	DENSITY = 1.0 kg/l - VISCOSITY = 1.0 mPa·s

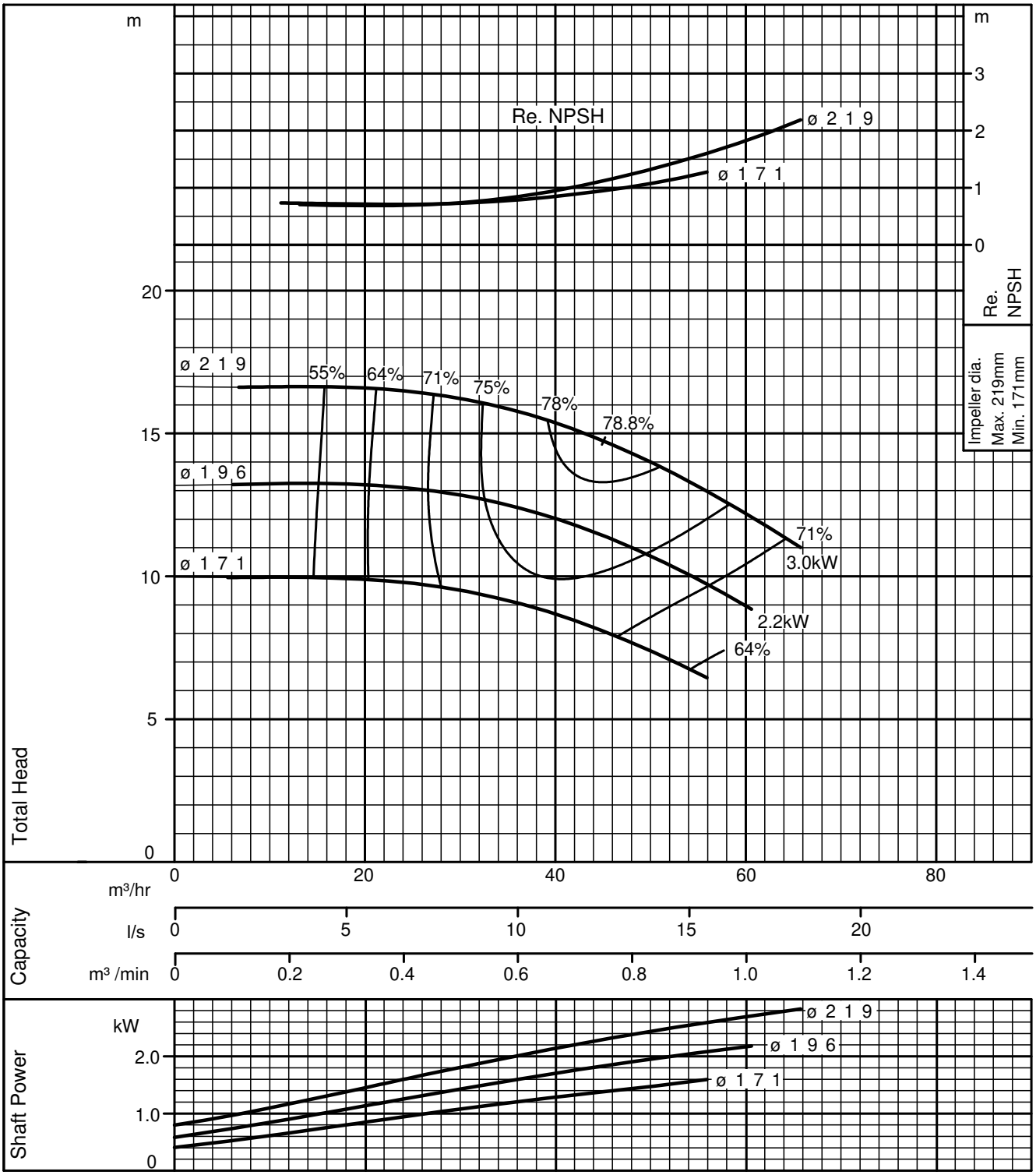

Performance Curve

GSD 50-250 (4 Pole)	MEI ≧ 0.7 Minimum Efficiency Index is based on full diamter impeller	According to ISO testing code 9906 Grade 3B
	50Hz (SYNCHRONOUS SPEED 1500min^{-1})	DENSITY = 1.0 kg/l - VISCOSITY = 1.0 mPa·s

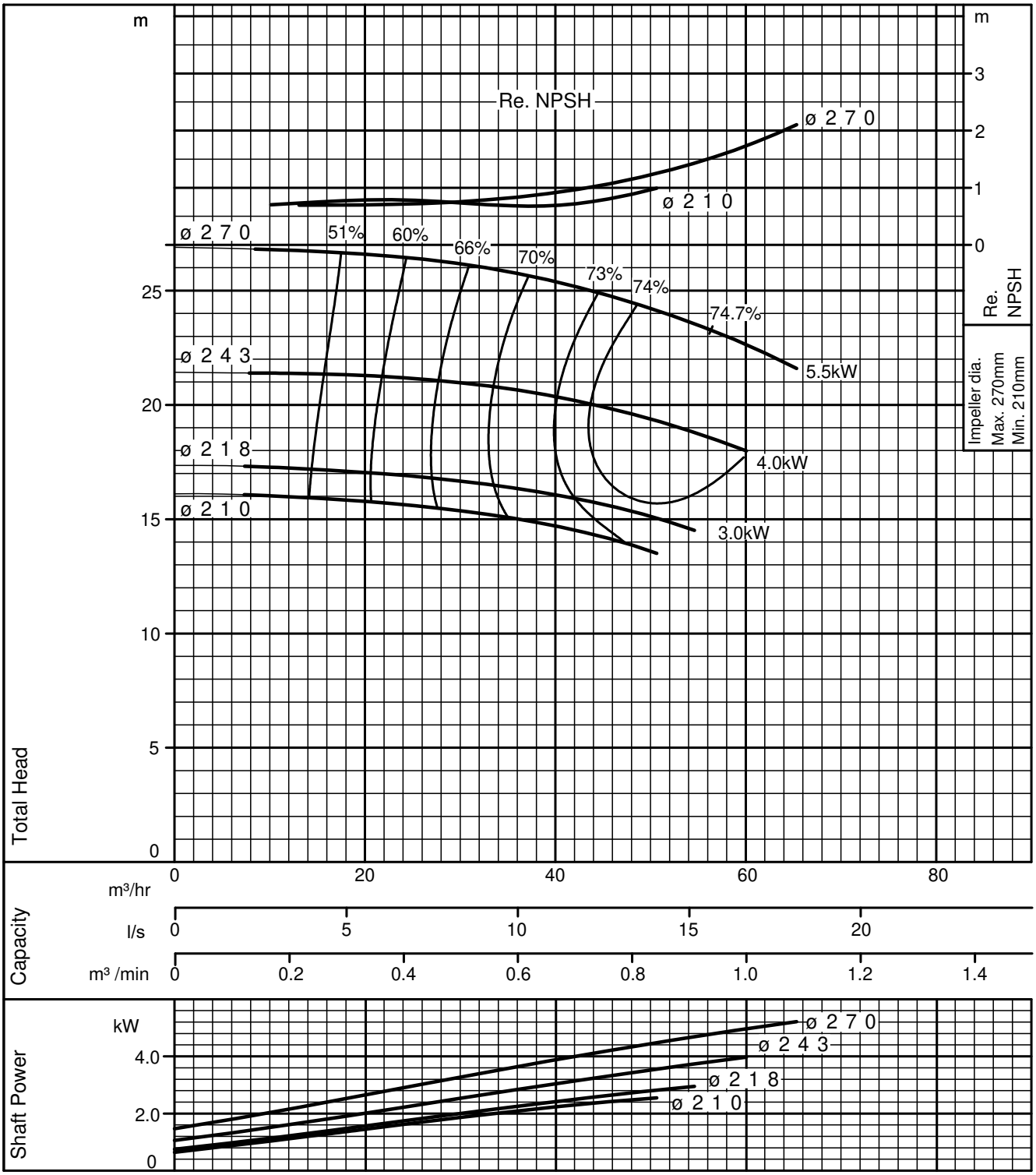

Performance Curve

GSD 50-315 (4 Pole)	MEI ≧ 0.7 Minimum Efficiency Index is based on full diamter impeller	According to ISO testing code 9906 Grade 3B
	50Hz (SYNCHRONOUS SPEED 1500min^{-1})	DENSITY = 1.0 kg/l - VISCOSITY = 1.0 mPa·s

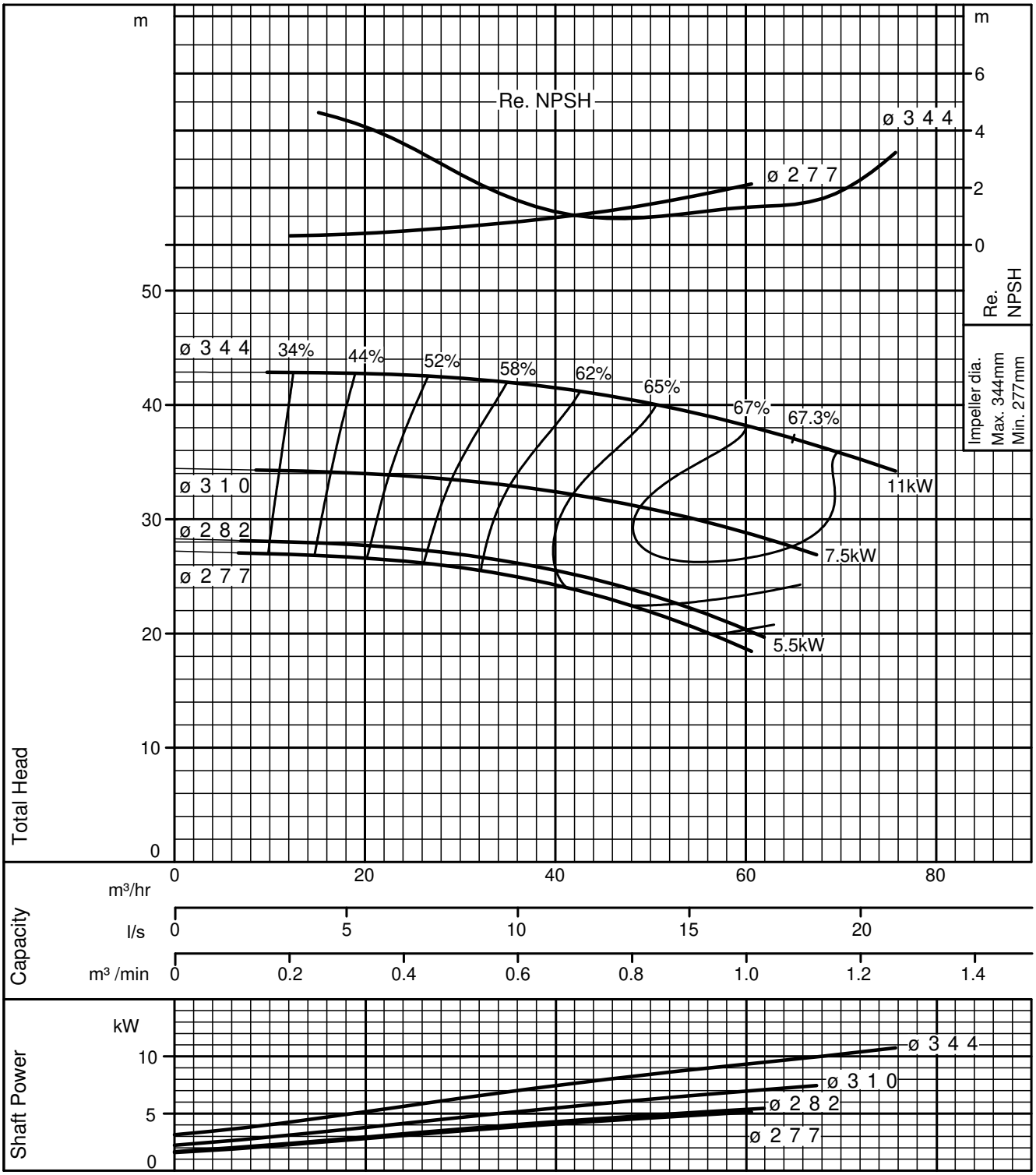

Performance Curve

GSD 65-125 (4 Pole)	MEI ≧ 0.6 Minimum Efficiency Index is based on full diamter impeller	According to ISO testing code 9906 Grade 3B
	50Hz (SYNCHRONOUS SPEED 1500min^{-1})	DENSITY = 1.0 kg/l - VISCOSITY = 1.0 mPa·s

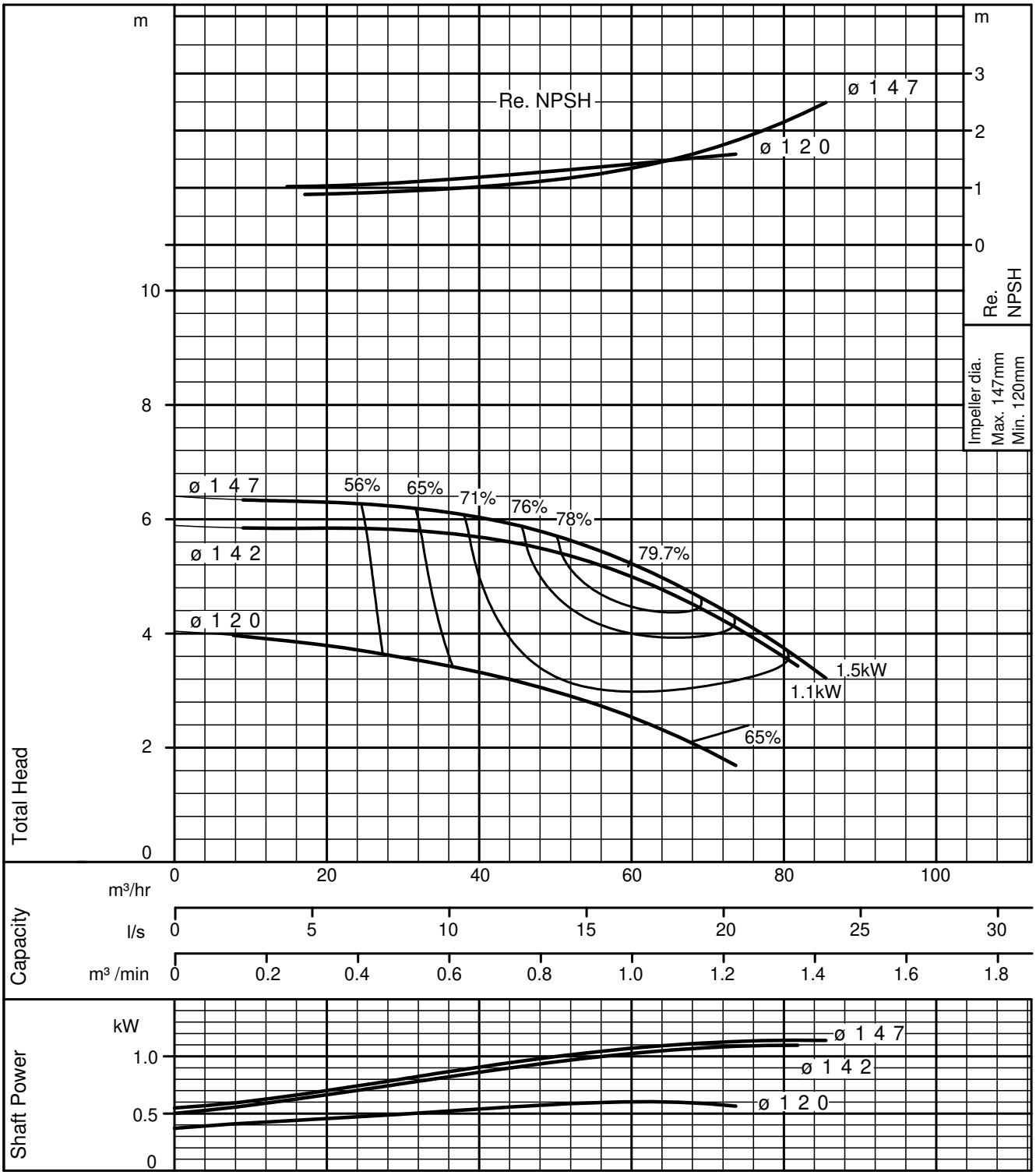

Performance Curve

GSD 65-160 (4 Pole)	MEI ≧ 0.6 Minimum Efficiency Index is based on full diamter impeller	According to ISO testing code 9906 Grade 3B
	50Hz (SYNCHRONOUS SPEED 1500min^{-1})	DENSITY = 1.0 kg/l - VISCOSITY = 1.0 mPa·s

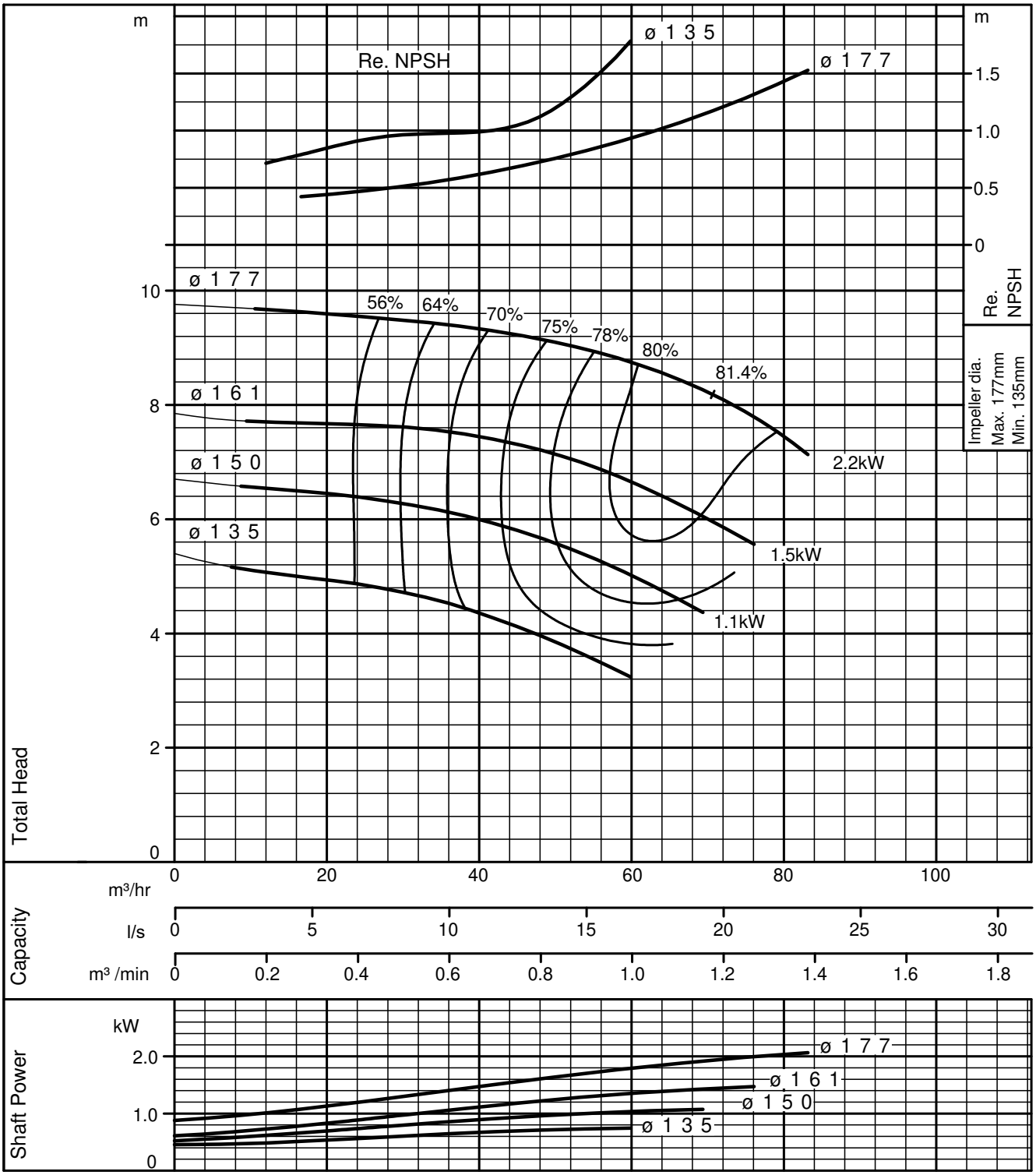

Performance Curve

GSD 65-200 (4 Pole)	MEI ≧ 0.7 Minimum Efficiency Index is based on full diamter impeller	According to ISO testing code 9906 Grade 3B
	50Hz (SYNCHRONOUS SPEED 1500min^{-1})	DENSITY = 1.0 kg/l - VISCOSITY = 1.0 mPa·s

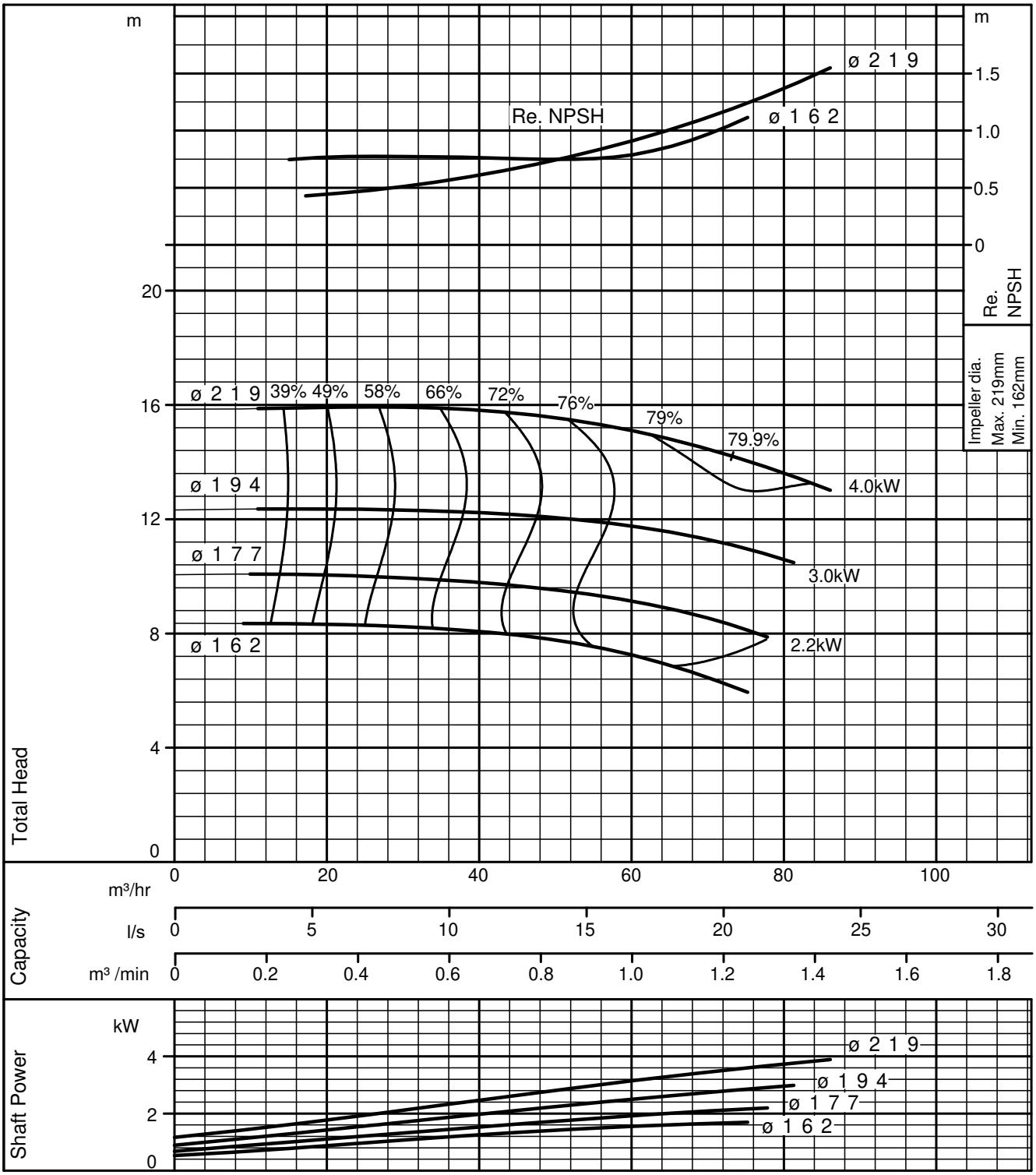

Performance Curve

GSD 65-250 (4 Pole)	MEI ≧ 0.7 Minimum Efficiency Index is based on full diamter impeller	According to ISO testing code 9906 Grade 3B
	50Hz (SYNCHRONOUS SPEED 1500min^{-1})	DENSITY = 1.0 kg/l - VISCOSITY = 1.0 mPa·s

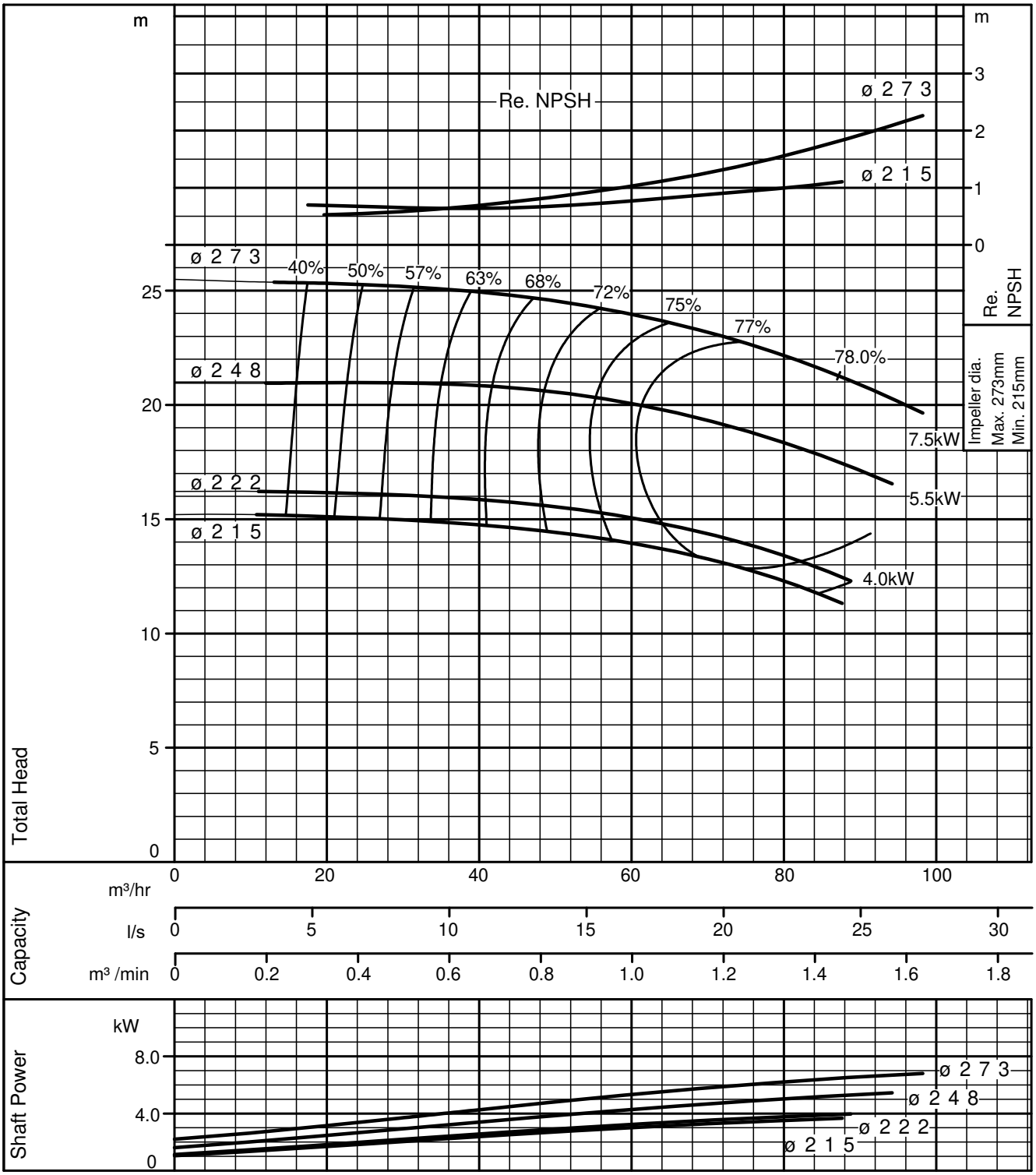

Performance Curve

GSD 65-315 (4 Pole)	MEI ≧ 0.7 Minimum Efficiency Index is based on full diamter impeller	According to ISO testing code 9906 Grade 3B
	50Hz (SYNCHRONOUS SPEED 1500min^{-1})	DENSITY = 1.0 kg/l - VISCOSITY = 1.0 mPa·s

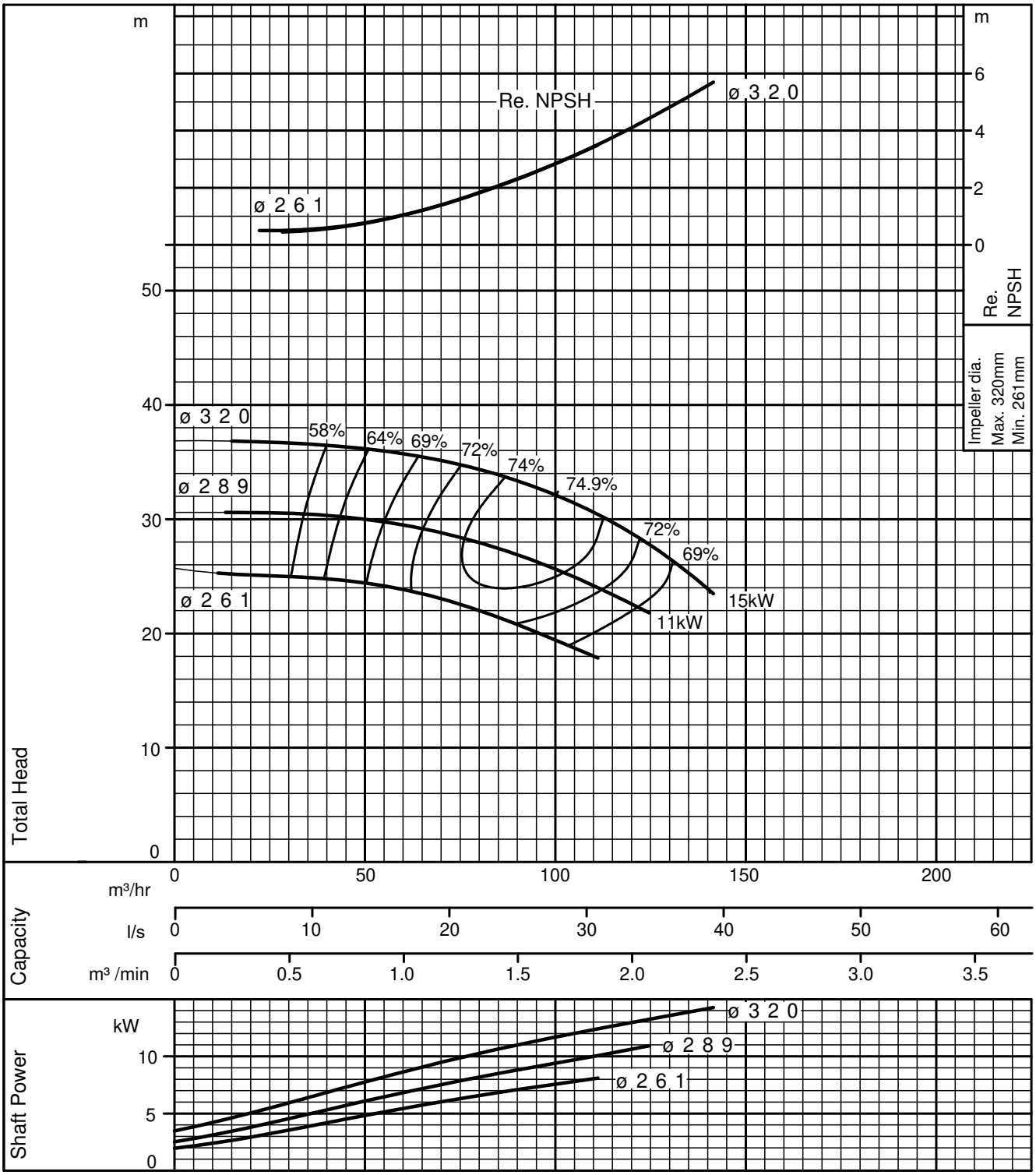

Performance Curve

GSD 80-160 (4 Pole)	MEI ≧ 0.7 Minimum Efficiency Index is based on full diamter impeller	According to ISO testing code 9906 Grade 3B
	50Hz (SYNCHRONOUS SPEED 1500min^{-1})	DENSITY = 1.0 kg/l - VISCOSITY = 1.0 mPa·s

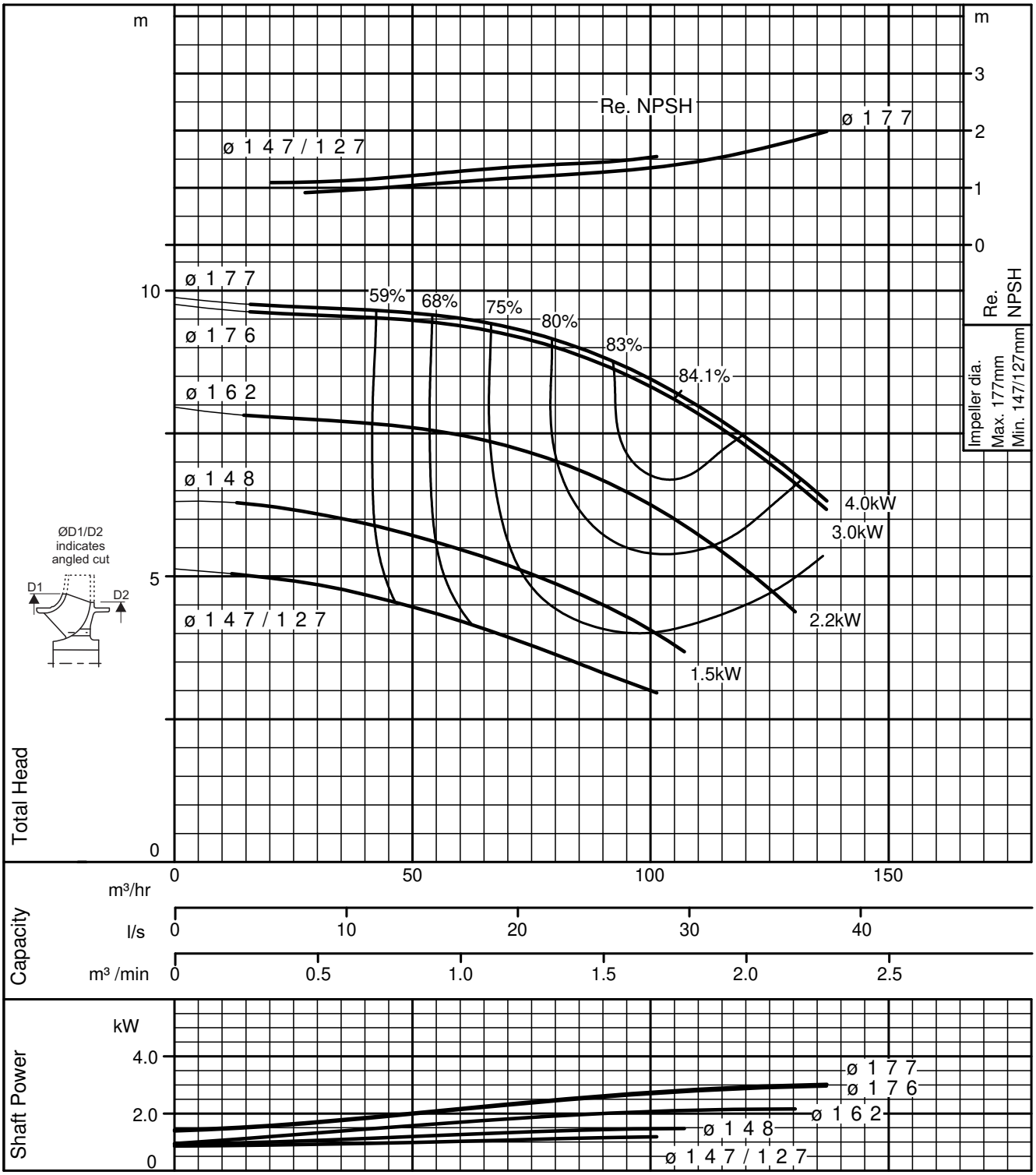

Performance Curve

GSD 80-200 (4 Pole)	MEI ≧ 0.7 Minimum Efficiency Index is based on full diamter impeller	According to ISO testing code 9906 Grade 3B
	50Hz (SYNCHRONOUS SPEED 1500min^{-1})	DENSITY = 1.0 kg/l - VISCOSITY = 1.0 mPa·s

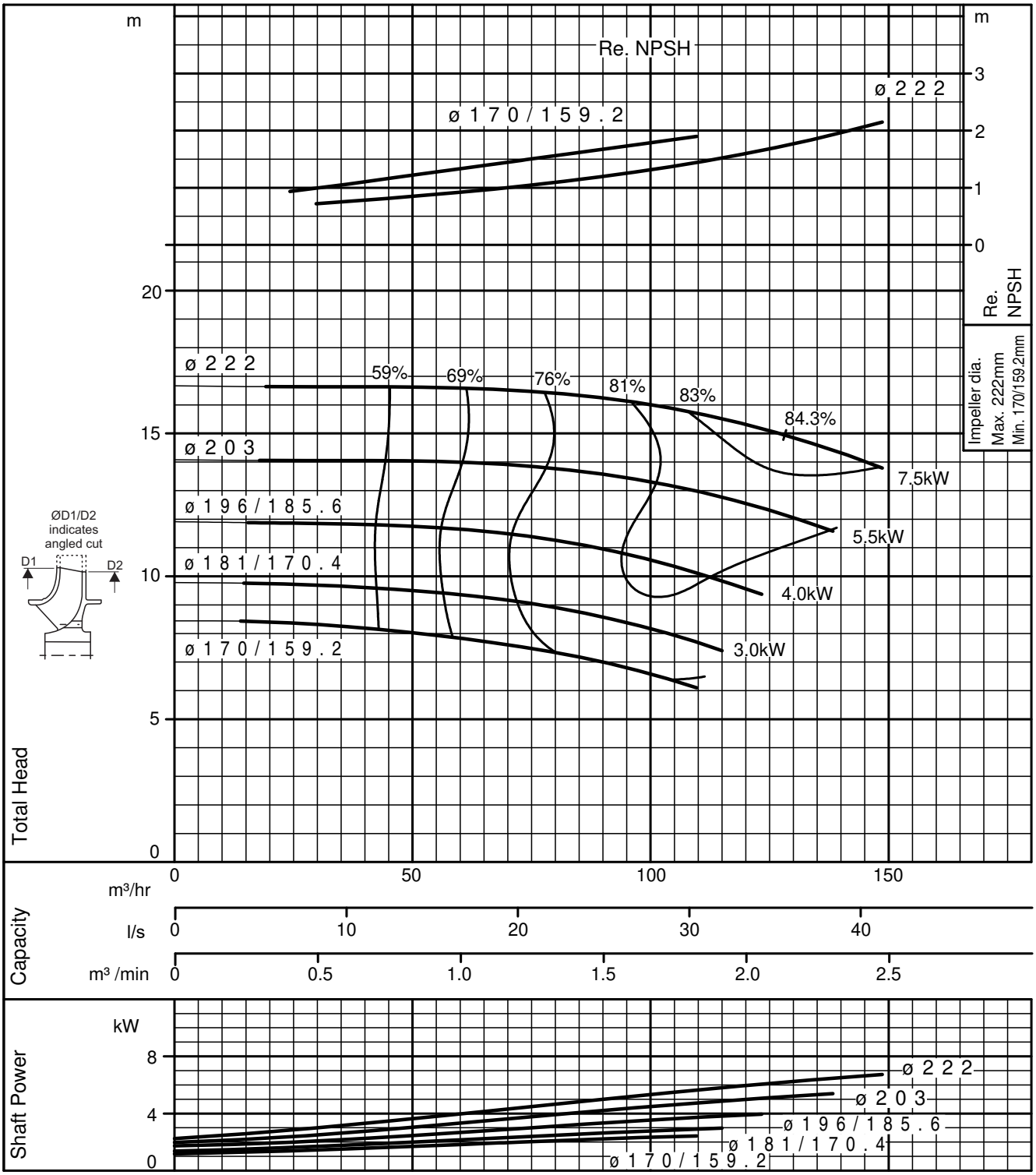

Performance Curve

GSD 80-250 (4 Pole)	MEI ≧ 0.7 Minimum Efficiency Index is based on full diamter impeller	According to ISO testing code 9906 Grade 3B
	50Hz (SYNCHRONOUS SPEED 1500min^{-1})	DENSITY = 1.0 kg/l - VISCOSITY = 1.0 mPa·s

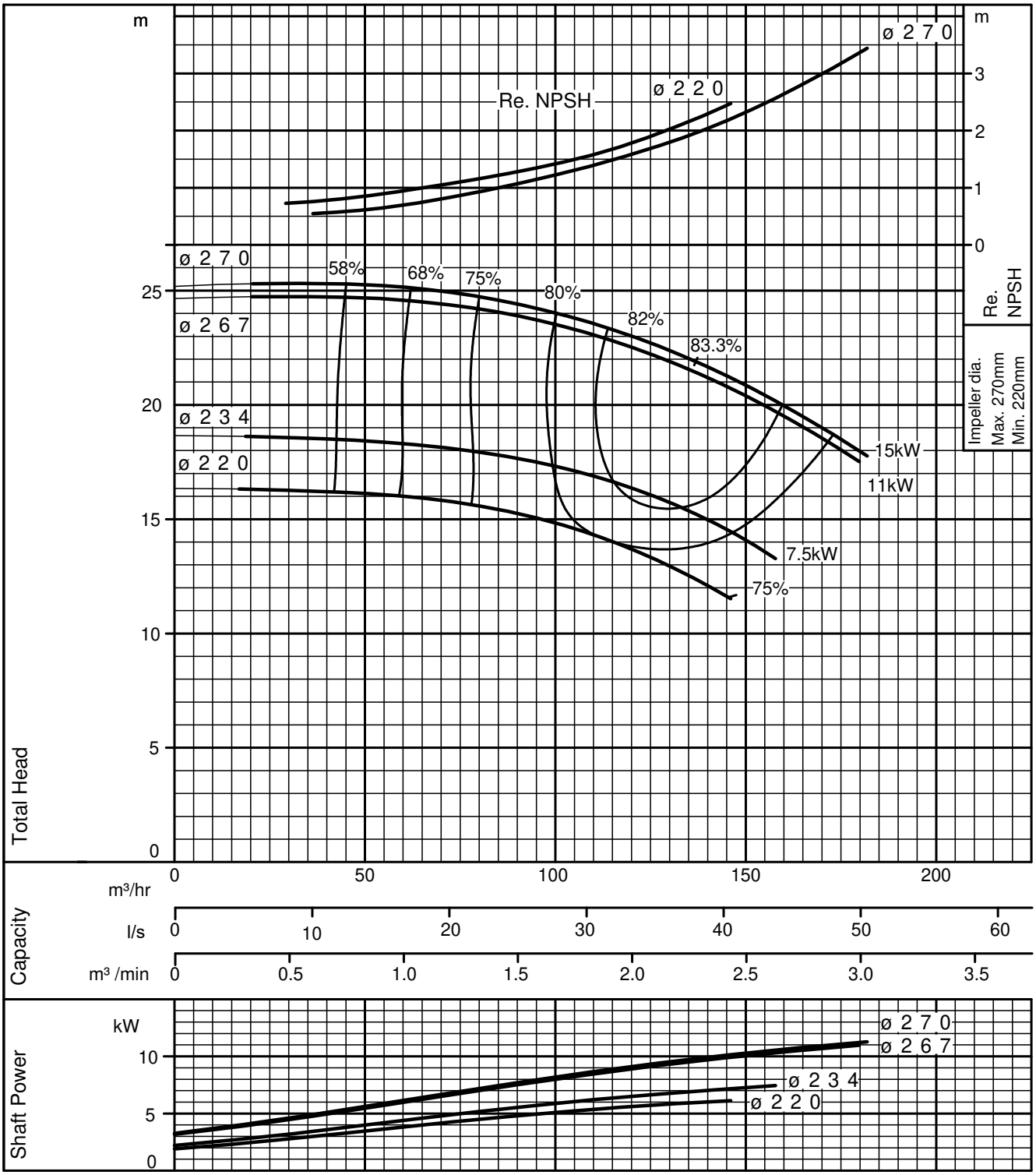

Performance Curve

GSD 80-315 (4 Pole)	MEI ≧ 0.7 Minimum Efficiency Index is based on full diamter impeller	According to ISO testing code 9906 Grade 3B
	50Hz (SYNCHRONOUS SPEED 1500min^{-1})	DENSITY = 1.0 kg/l - VISCOSITY = 1.0 mPa·s

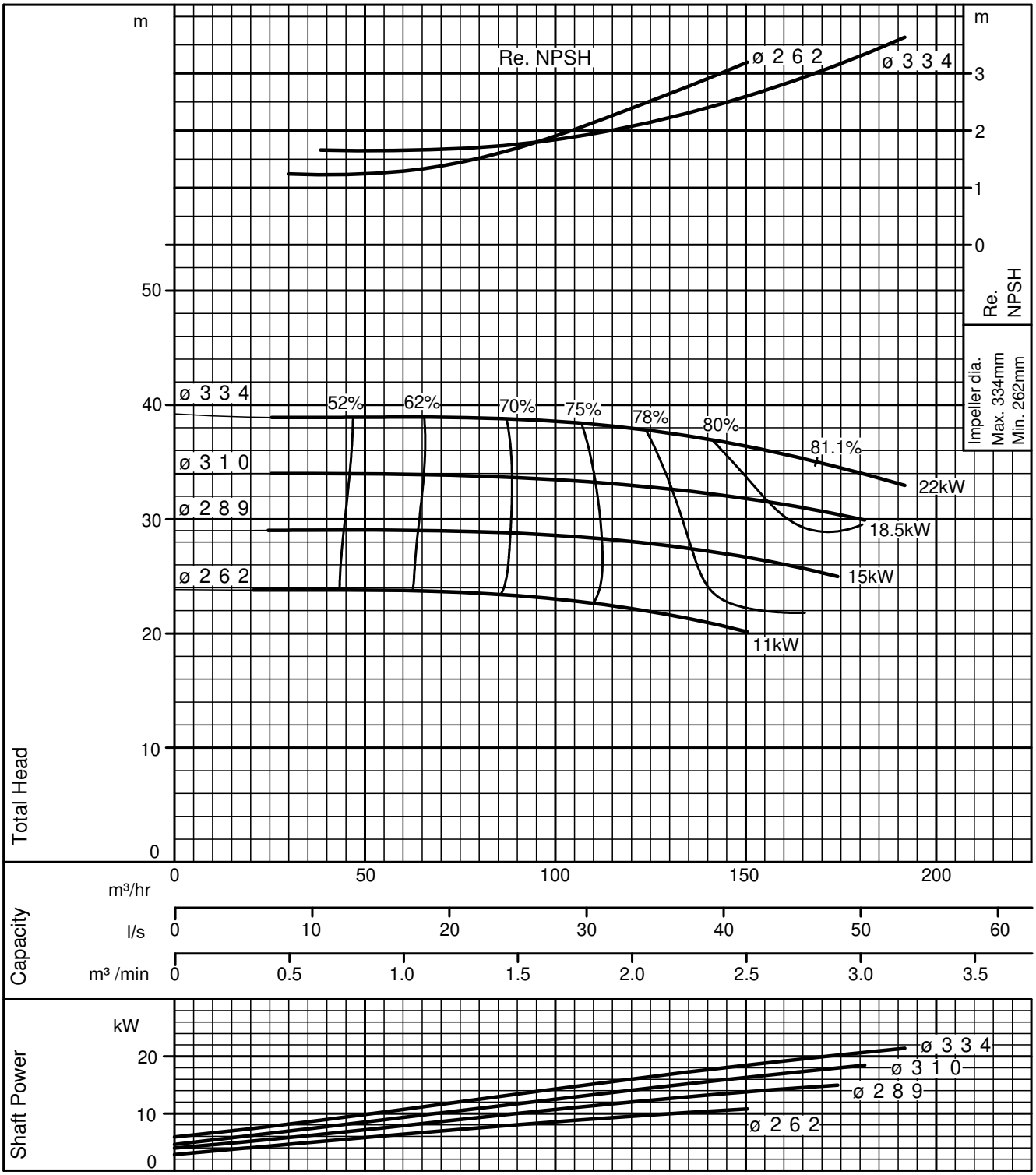

Performance Curve

GSD 80-400 (4 Pole)	MEI ≧ 0.7 Minimum Efficiency Index is based on full diamter impeller	According to ISO testing code 9906 Grade 3B
	50Hz (SYNCHRONOUS SPEED 1500min^{-1})	DENSITY = 1.0 kg/l - VISCOSITY = 1.0 mPa·s

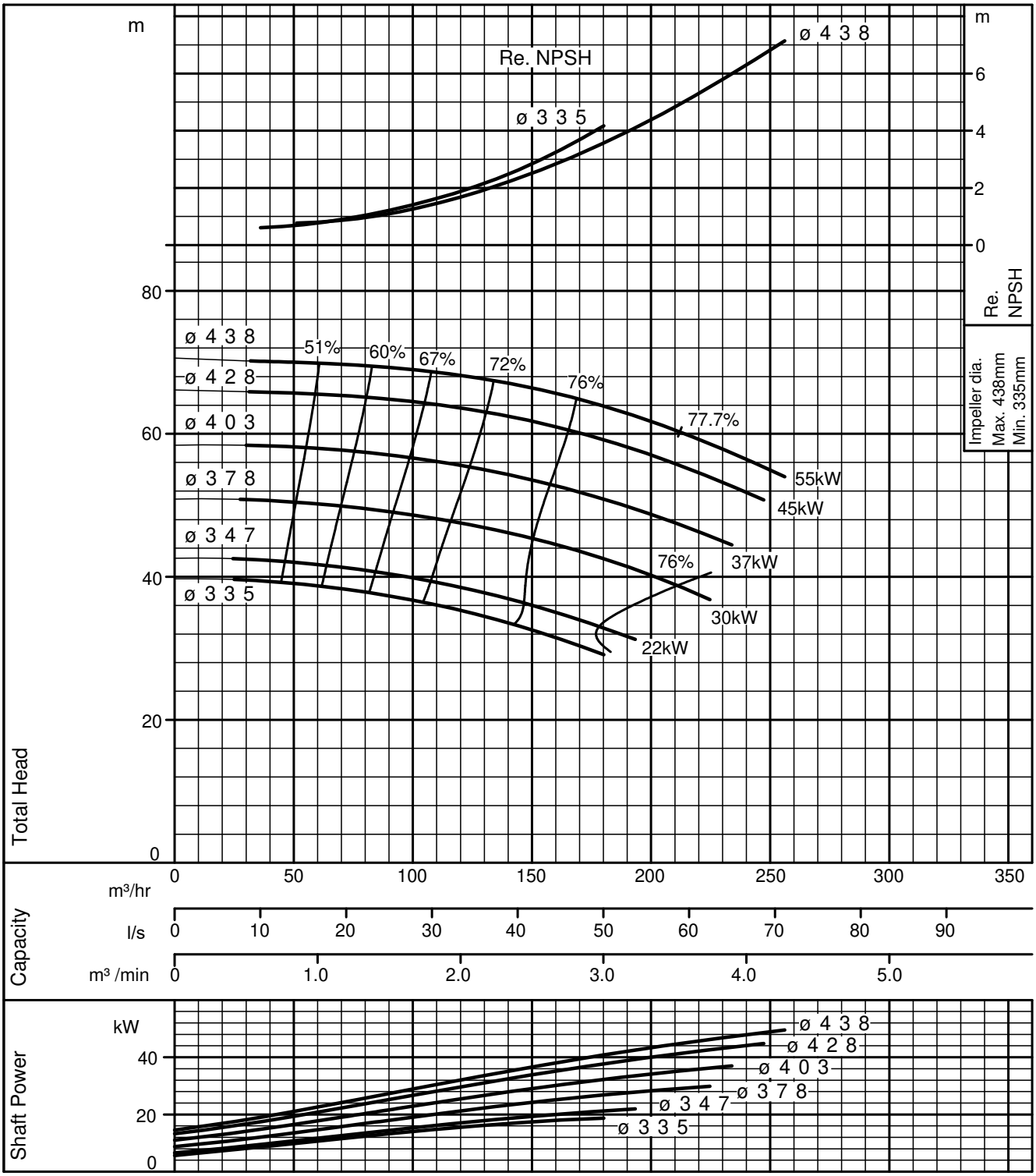

Performance Curve

GSD 100-160 (4 Pole)	MEI ≧ 0.6 Minimum Efficiency Index is based on full diamter impeller	According to ISO testing code 9906 Grade 3B
	50Hz (SYNCHRONOUS SPEED 1500min^{-1})	DENSITY = 1.0 kg/l - VISCOSITY = 1.0 mPa·s

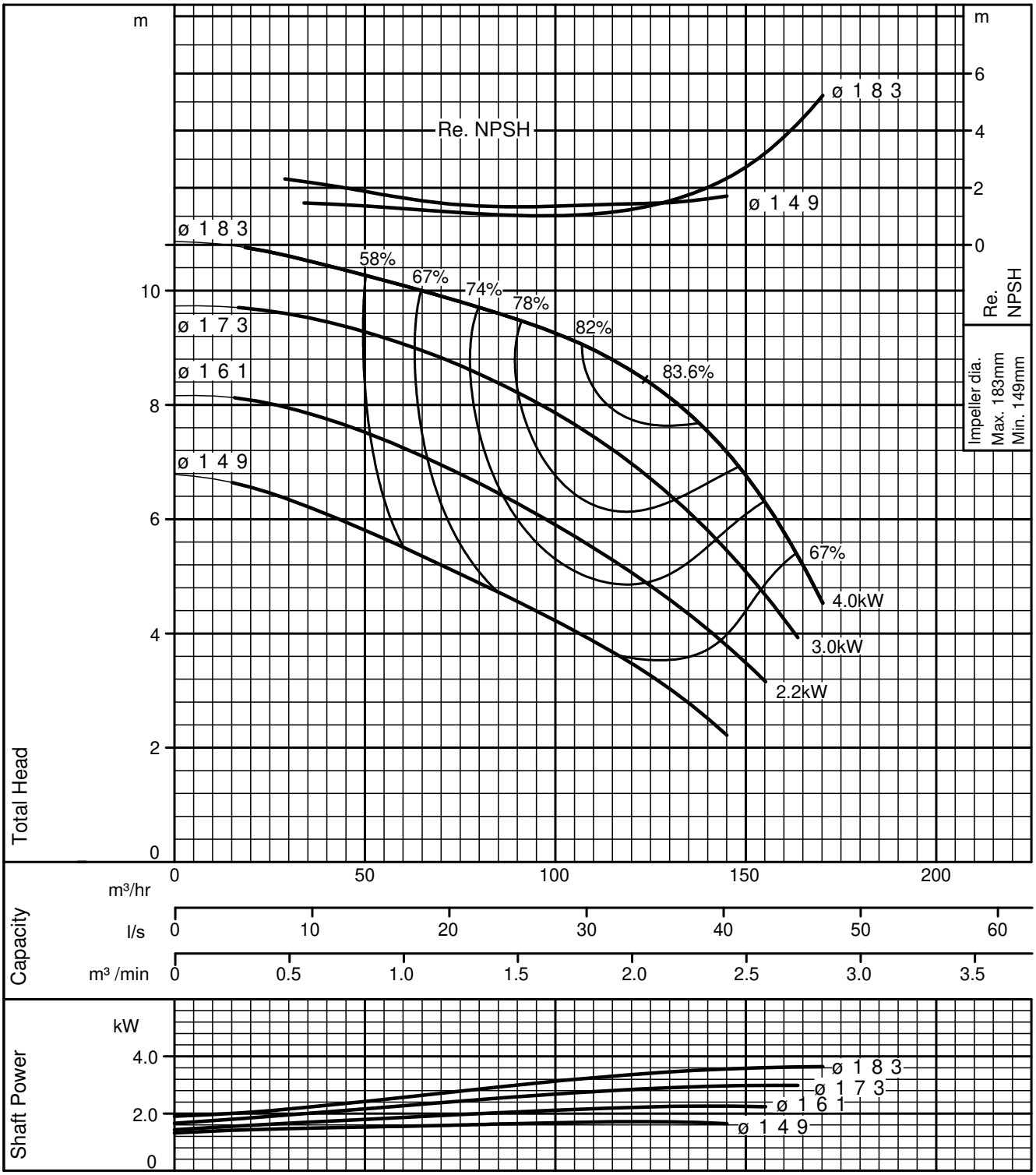

Performance Curve

GSD 100-200 (4 Pole)	MEI ≧ 0.6 Minimum Efficiency Index is based on full diamter impeller	According to ISO testing code 9906 Grade 3B
	50Hz (SYNCHRONOUS SPEED 1500min^{-1})	DENSITY = 1.0 kg/l - VISCOSITY = 1.0 mPa·s

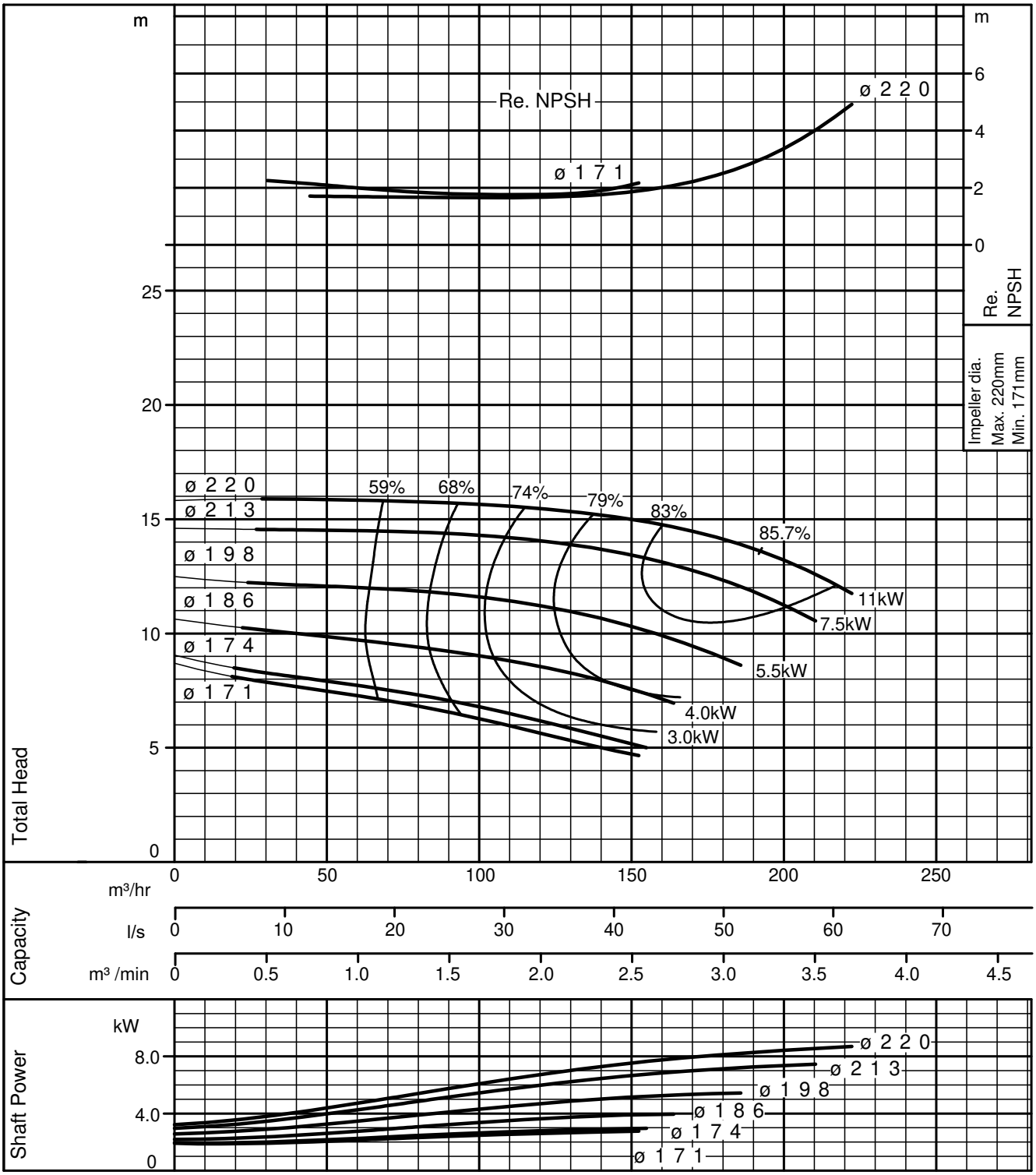

Performance Curve

GSD 100-250 (4 Pole)	MEI ≧ 0.6 Minimum Efficiency Index is based on full diamter impeller	According to ISO testing code 9906 Grade 3B
	50Hz (SYNCHRONOUS SPEED 1500min^{-1})	DENSITY = 1.0 kg/l - VISCOSITY = 1.0 mPa·s

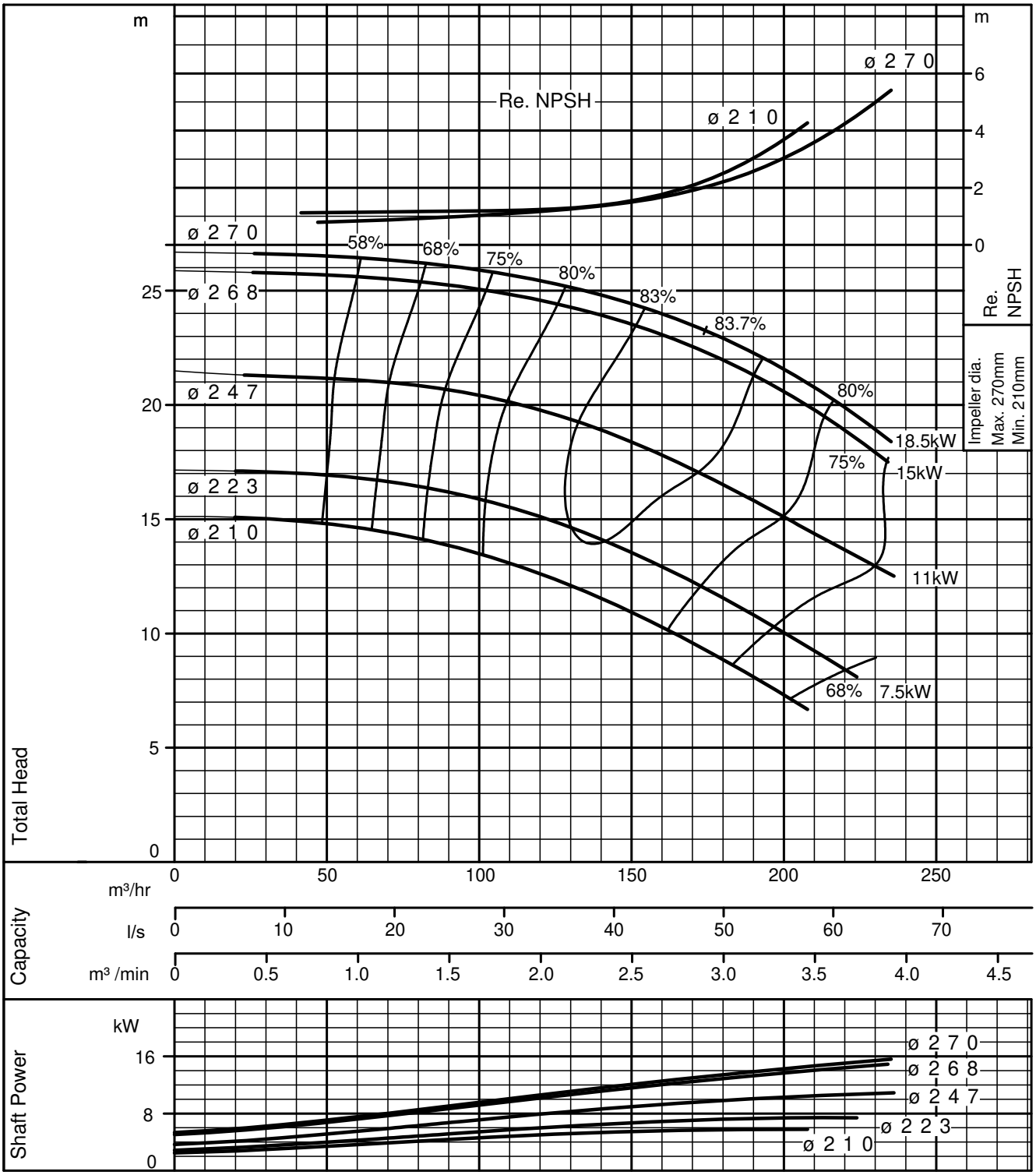

Performance Curve

GSD 100-315 (4 Pole)	MEI ≧ 0.7 Minimum Efficiency Index is based on full diamter impeller	According to ISO testing code 9906 Grade 3B
	50Hz (SYNCHRONOUS SPEED 1500min^{-1})	DENSITY = 1.0 kg/l - VISCOSITY = 1.0 mPa·s

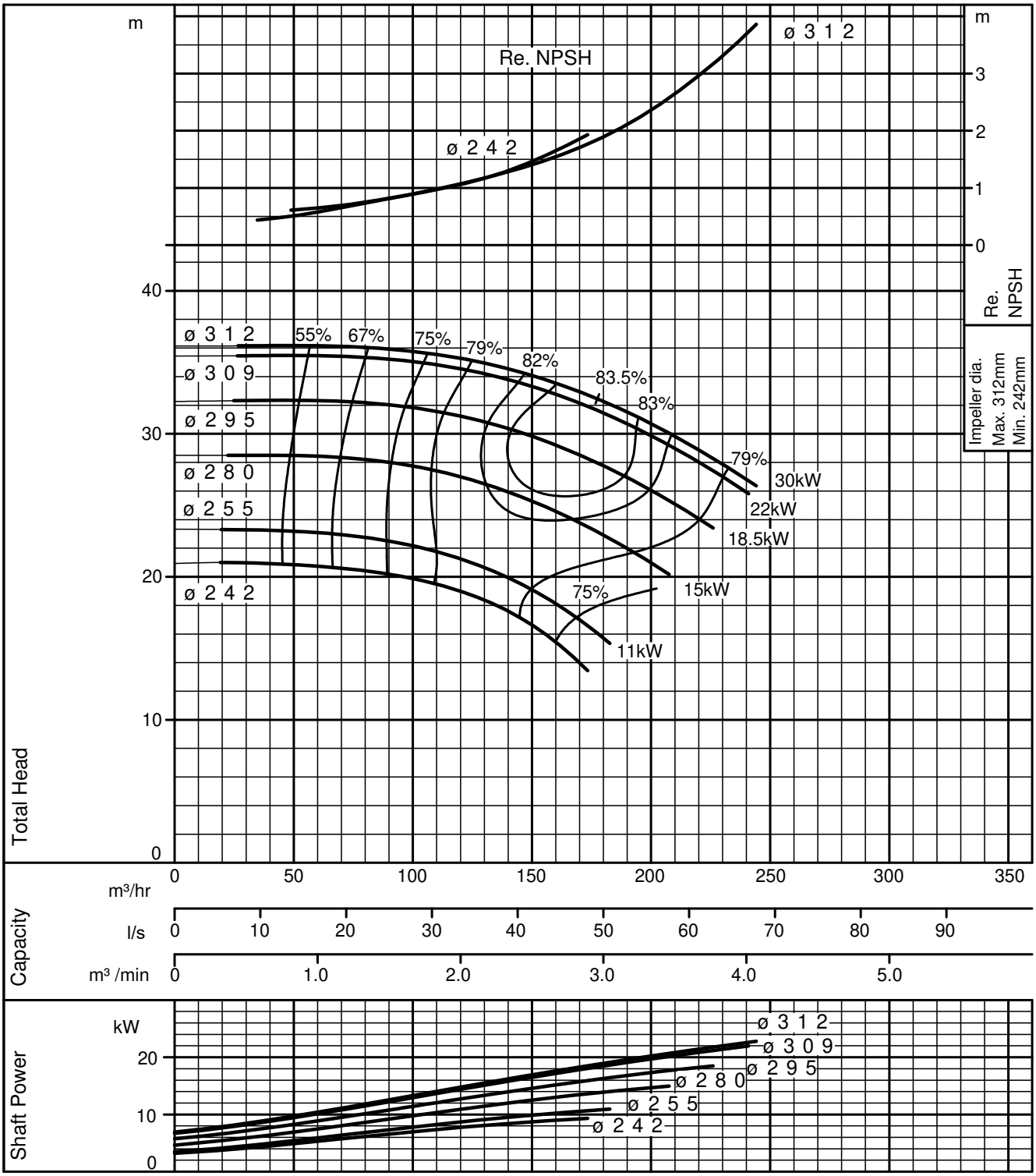

Performance Curve

GSD 100-400 (4 Pole)	MEI ≧ 0.7 Minimum Efficiency Index is based on full diamter impeller	According to ISO testing code 9906 Grade 3B
	50Hz (SYNCHRONOUS SPEED 1500min^{-1})	DENSITY = 1.0 kg/l - VISCOSITY = 1.0 mPa·s

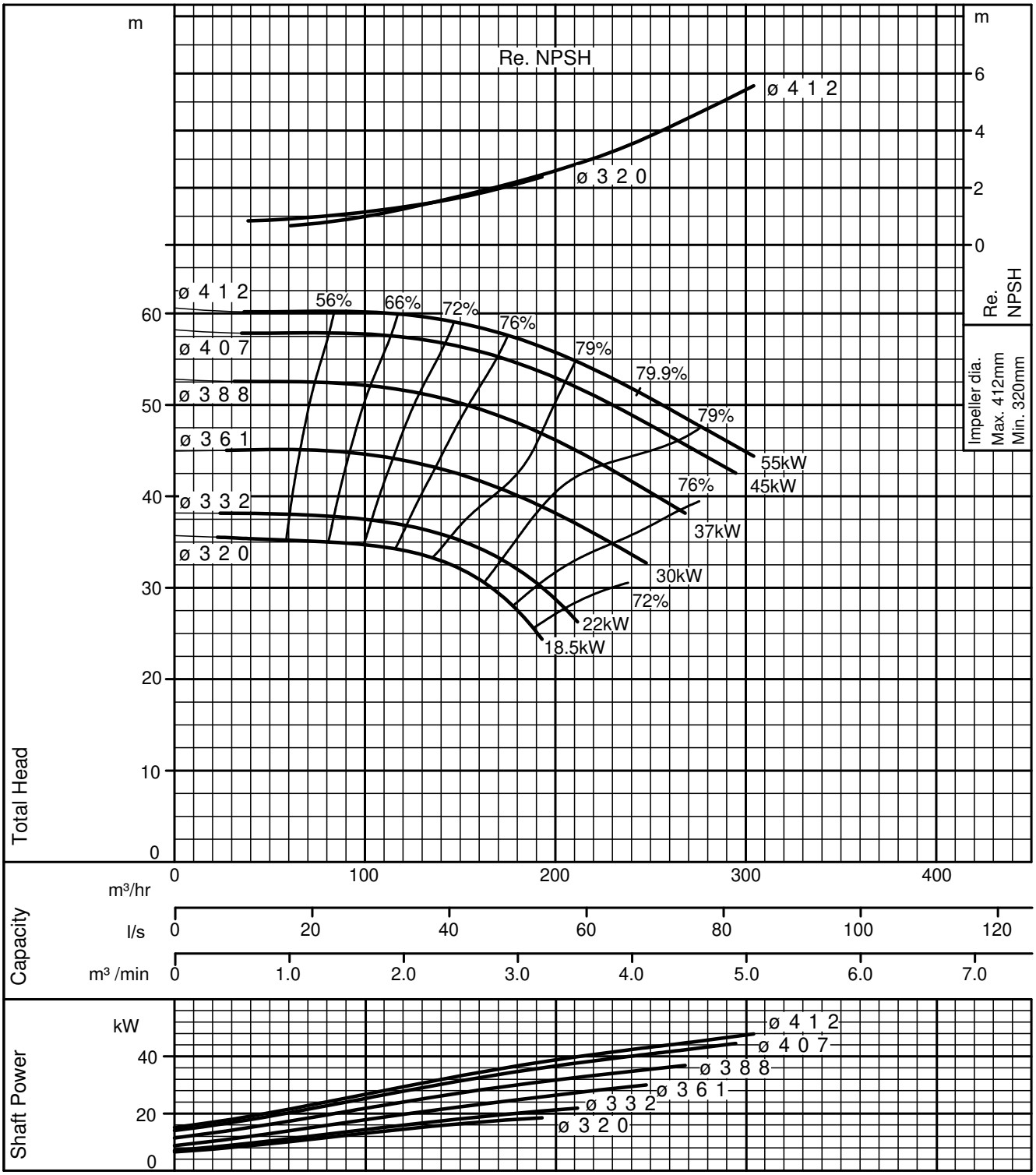

Performance Curve

GSD 125-200 (4 Pole)	MEI ≧ 0.6 Minimum Efficiency Index is based on full diamter impeller	According to ISO testing code 9906 Grade 3B
	50Hz (SYNCHRONOUS SPEED 1500min^{-1})	DENSITY = 1.0 kg/l - VISCOSITY = 1.0 mPa·s

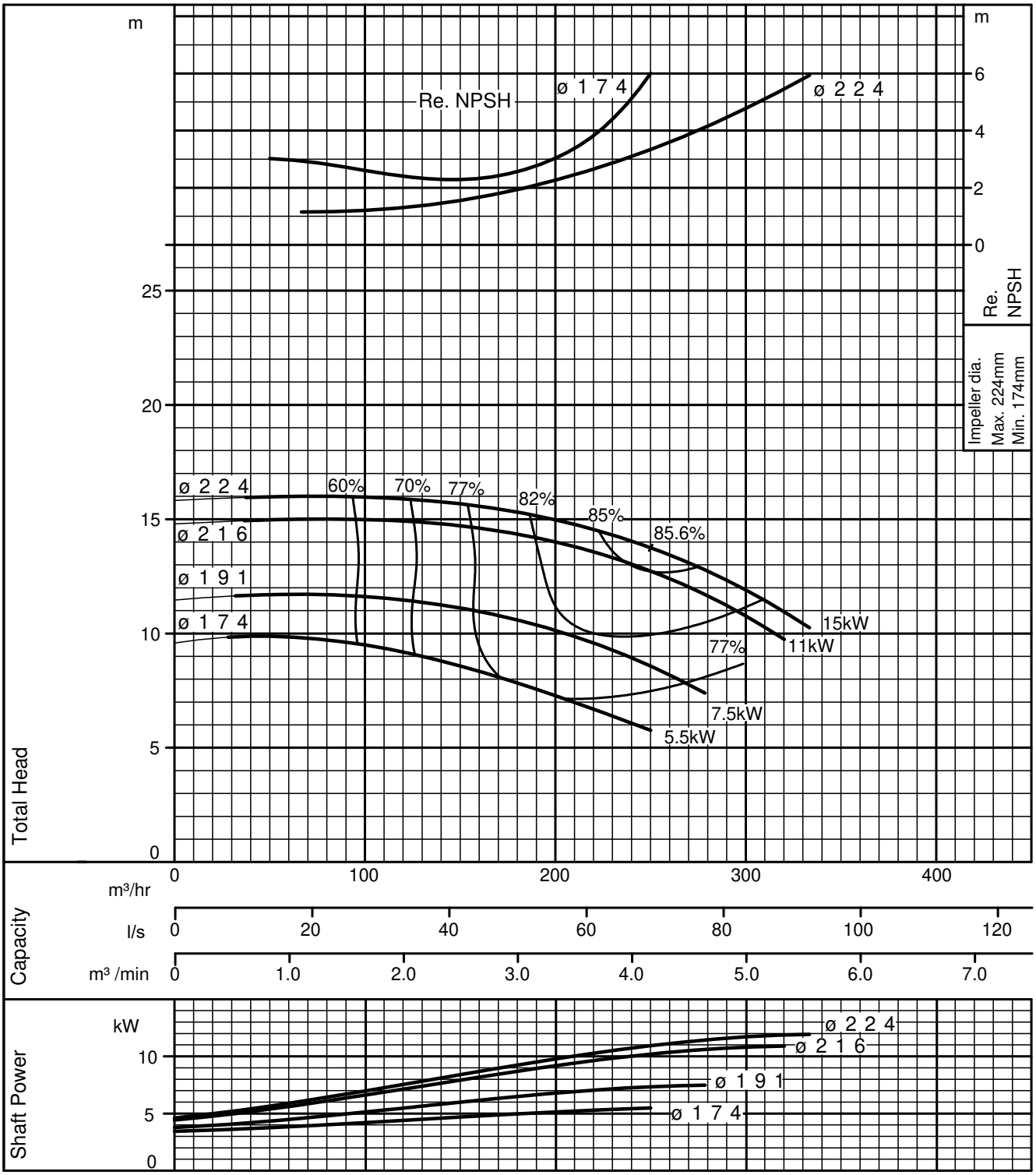

Performance Curve

GSD 125-250 (4 Pole)	MEI ≧ 0.7 Minimum Efficiency Index is based on full diamter impeller	According to ISO testing code 9906 Grade 3B
	50Hz (SYNCHRONOUS SPEED 1500min^{-1})	DENSITY = 1.0 kg/l - VISCOSITY = 1.0 mPa·s

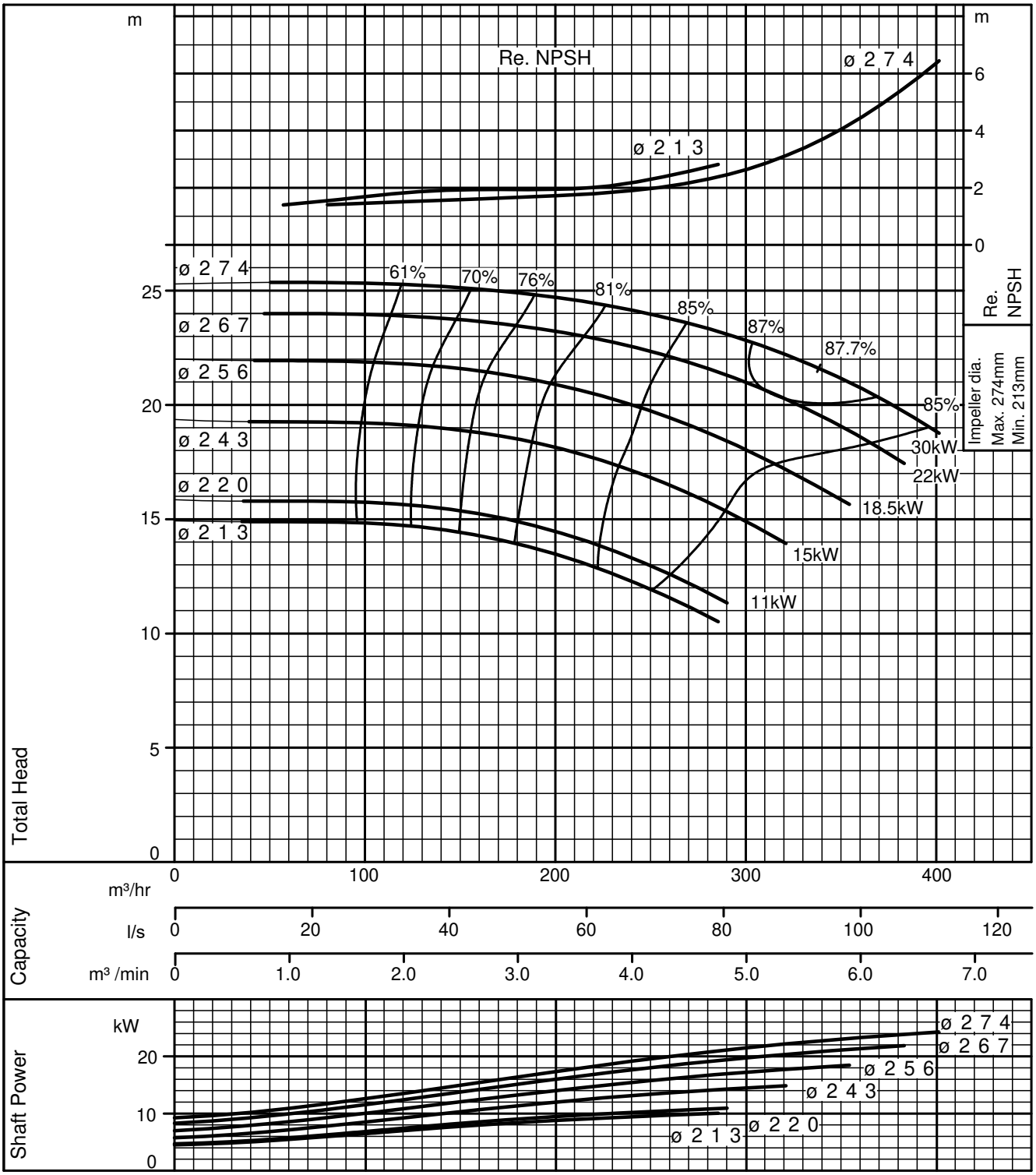

Performance Curve

GSD 125-315 (4 Pole)	MEI ≧ 0.7 Minimum Efficiency Index is based on full diamter impeller	According to ISO testing code 9906 Grade 3B
	50Hz (SYNCHRONOUS SPEED 1500min^{-1})	DENSITY = 1.0 kg/l - VISCOSITY = 1.0 mPa·s

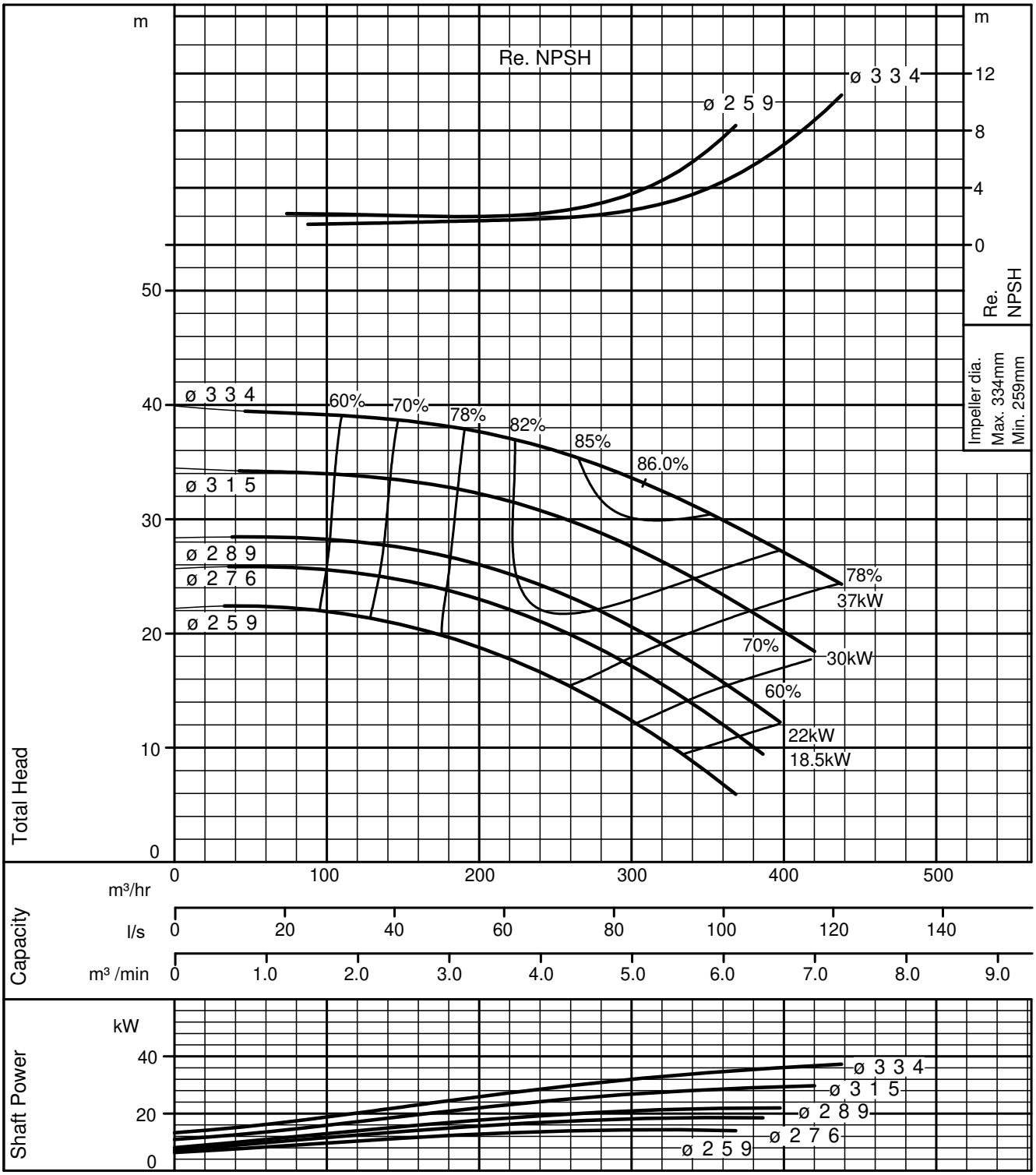

Performance Curve

GSD 125-400 (4 Pole)	MEI ≧ 0.7 Minimum Efficiency Index is based on full diamter impeller	According to ISO testing code 9906 Grade 3B
	50Hz (SYNCHRONOUS SPEED 1500min^{-1})	DENSITY = 1.0 kg/l - VISCOSITY = 1.0 mPa·s

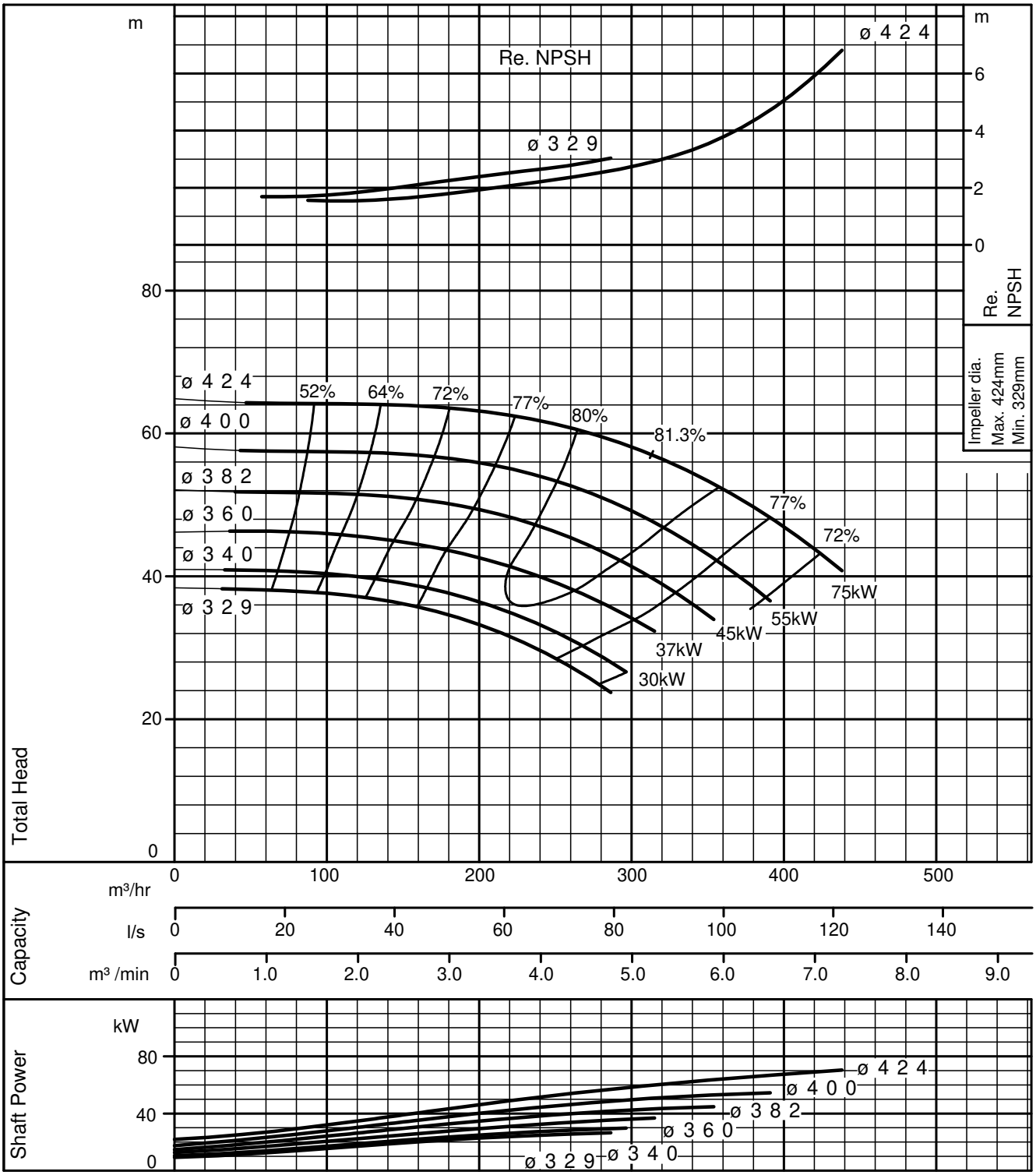

Performance Curve

GSD 150-200 (4 Pole)	MEI ≧ 0.7 Minimum Efficiency Index is based on full diamter impeller	According to ISO testing code 9906 Grade 3B
	50Hz (SYNCHRONOUS SPEED 1500min^{-1})	DENSITY = 1.0 kg/l - VISCOSITY = 1.0 mPa·s

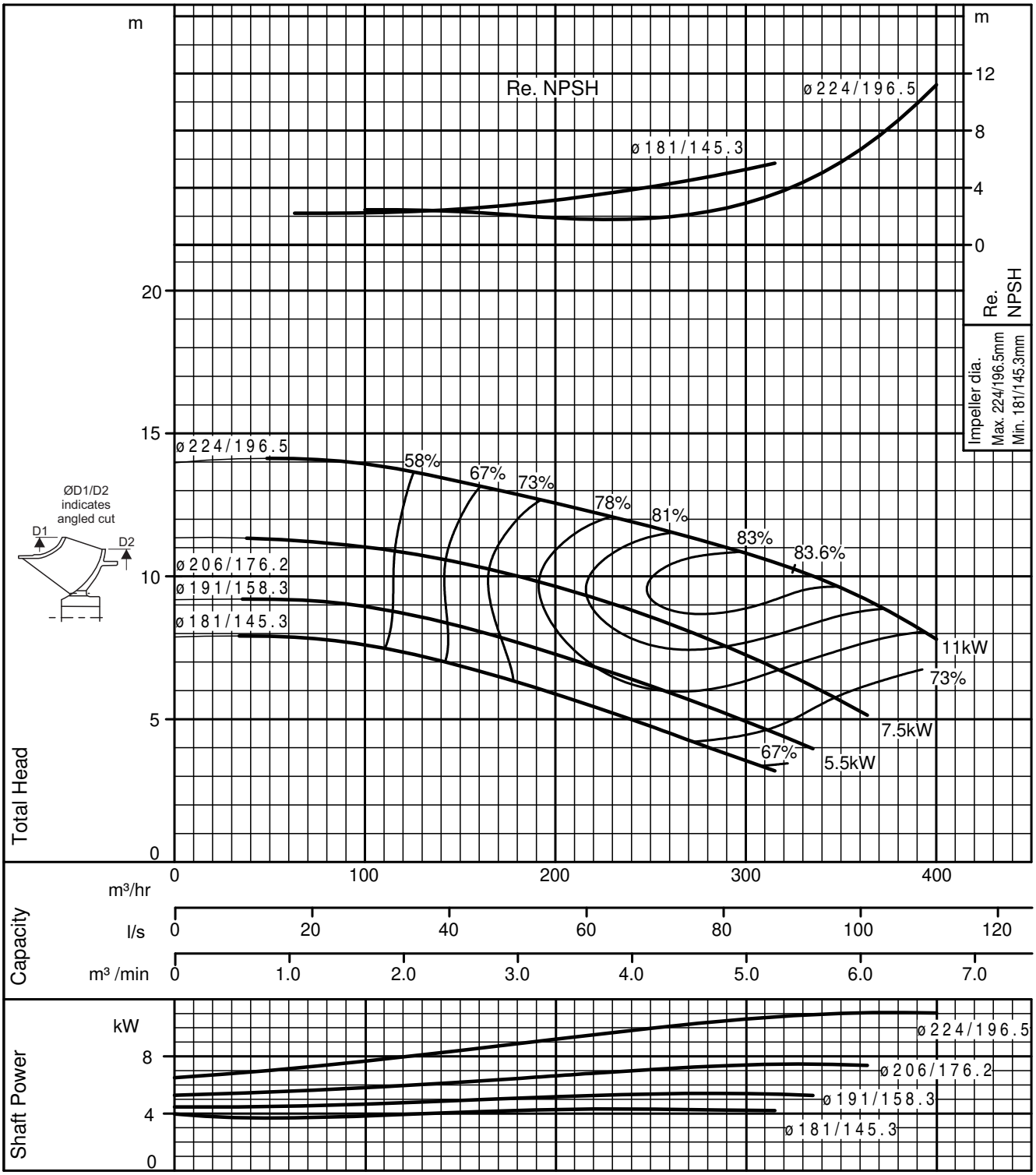

Performance Curve

GSD 150-250 (4 Pole)	MEI ≧ 0.7 Minimum Efficiency Index is based on full diamter impeller	According to ISO testing code 9906 Grade 3B
	50Hz (SYNCHRONOUS SPEED 1500min^{-1})	DENSITY = 1.0 kg/l - VISCOSITY = 1.0 mPa·s

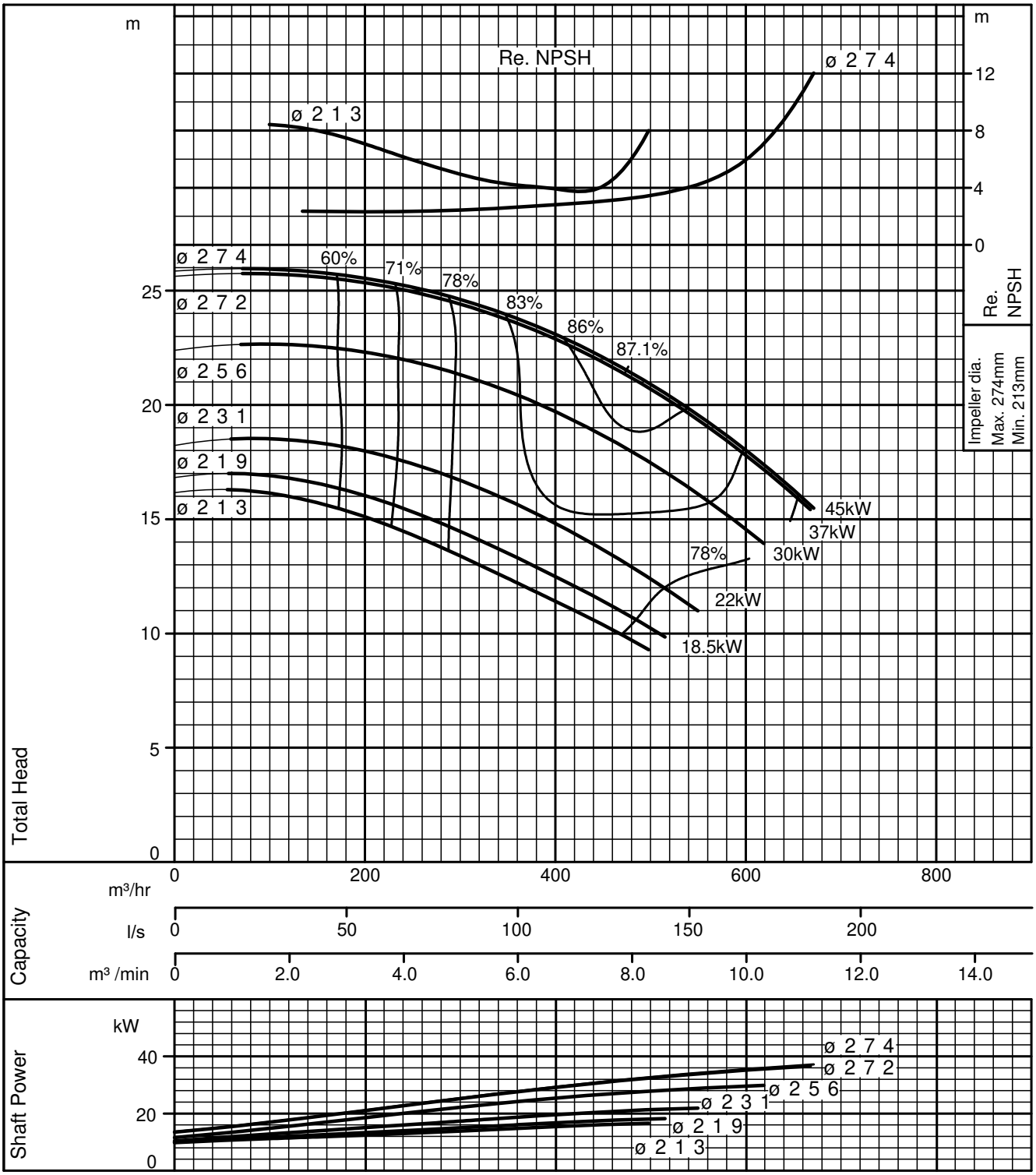

Performance Curve

GSD 150-315 (4 Pole)	MEI ≧ 0.6 Minimum Efficiency Index is based on full diamter impeller	According to ISO testing code 9906 Grade 3B
	50Hz (SYNCHRONOUS SPEED 1500min^{-1})	DENSITY = 1.0 kg/l - VISCOSITY = 1.0 mPa·s

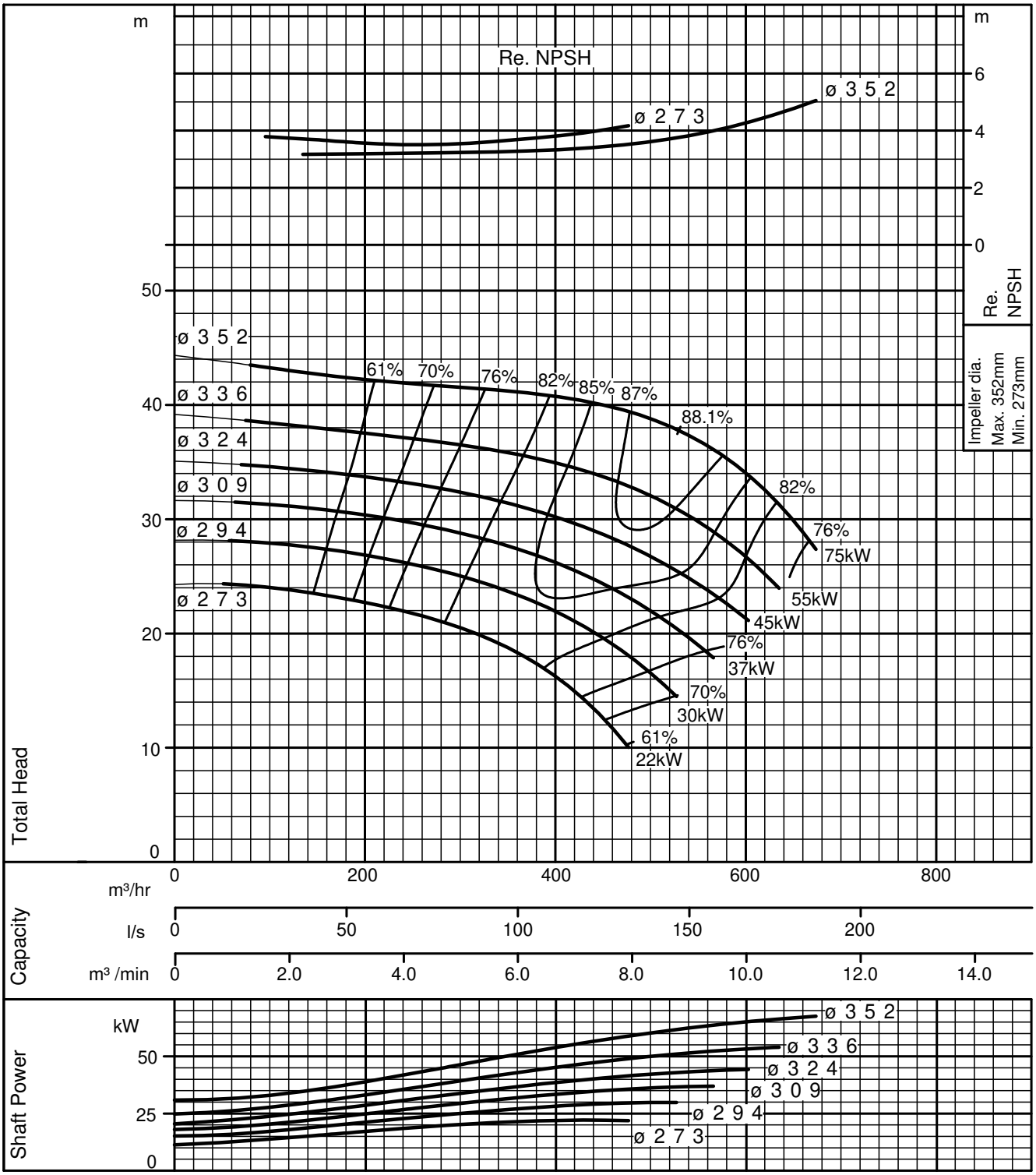

Performance Curve

GSD 150-400 (4 Pole)	MEI ≧ 0.7 Minimum Efficiency Index is based on full diamter impeller	According to ISO testing code 9906 Grade 3B
	50Hz (SYNCHRONOUS SPEED 1500min^{-1})	DENSITY = 1.0 kg/l - VISCOSITY = 1.0 mPa·s

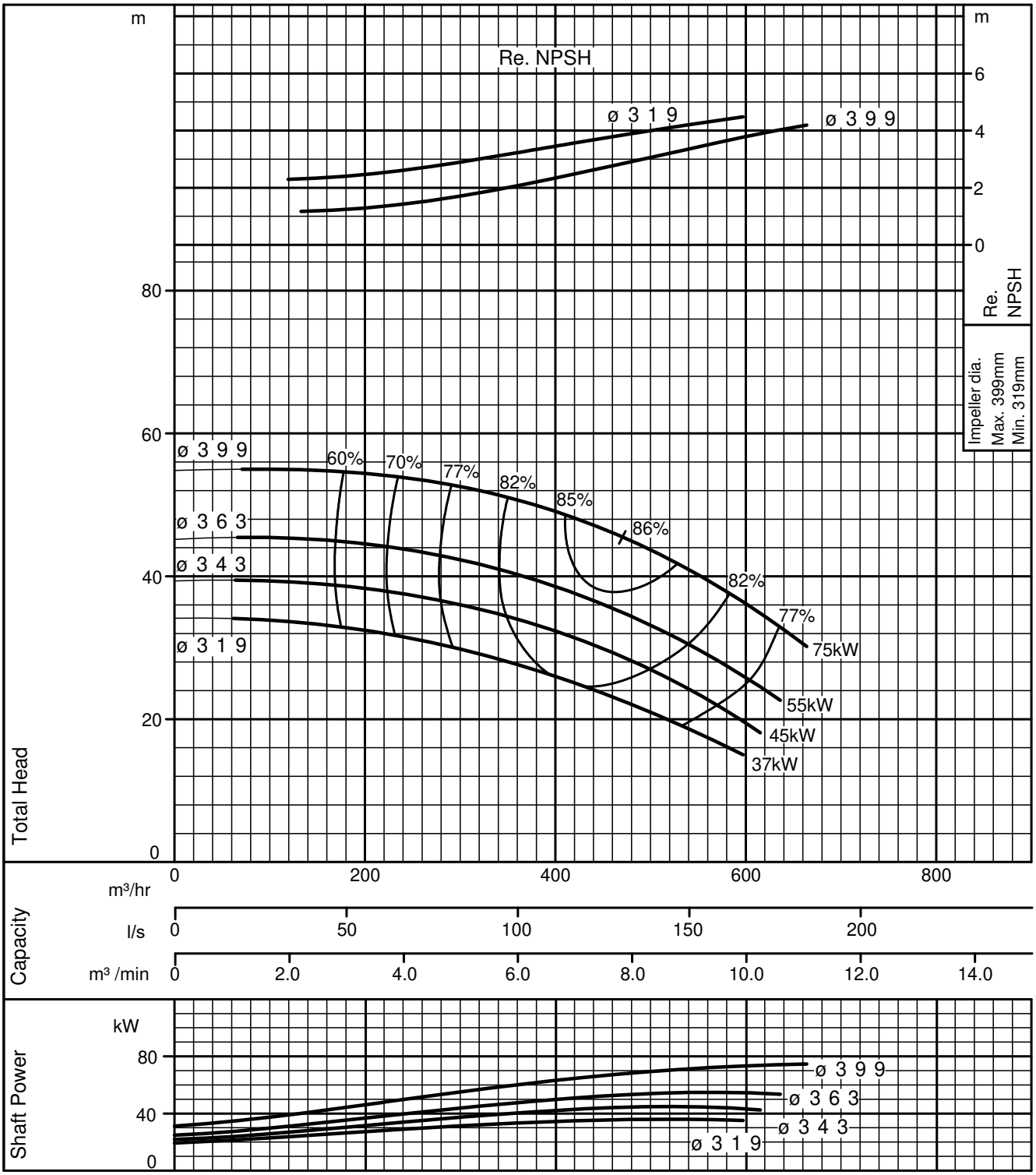

Sectional view and materials of construction

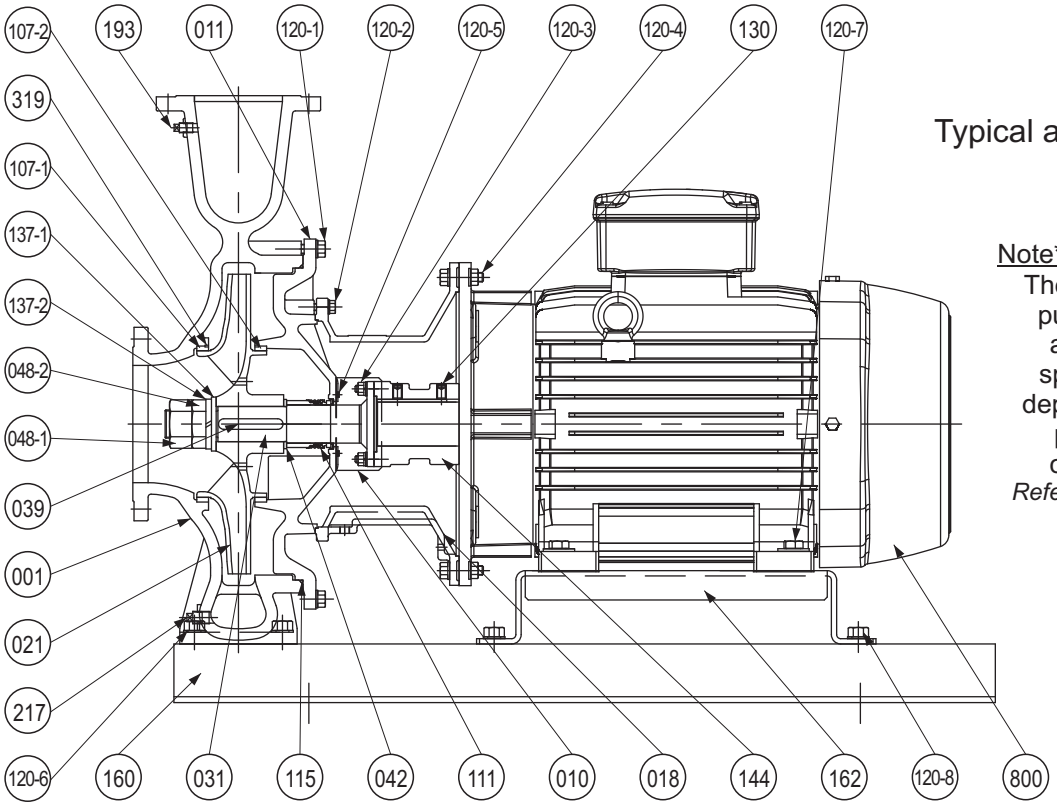

Typical arrangement only

Note**
The use of stays, pump spacers, and/or motor spacers varies depending on the pump/motor combination.
Refer to page 301 for more details

 # 014 & 117 only applicable to size 150-400 (with double volute design)

Item No.	Part name		Materials		
001	CASING	1	Cast Iron (ED painted)	FC250	EN-GJL-250(EN-JL1040)
010	PROTECTOR	1	304 Stainless steel	SUS304	X5CrNi18-10(1.4301)
011	CASING COVER	1	Cast Iron (ED painted)	FC250	EN-GJL-250(EN-JL1040)
018	BRACKET	1	Cast Iron (ED painted)	FC250	EN-GJL-250(EN-JL1040)
021	IMPELLER	1	Bronze	CAC406	CuSn5Zn5Pb5(CC491K)
031	SHAFT	1	420 Stainless steel Wetted part	SUS420J2Q/S35C	X30Cr13(1.4028)/C35
039	KEY	1	420 Stainless steel	SUS420J2	X30Cr13(1.4028)
042	MECHANICAL SEAL SPACER	1	304 Stainless steel	SUS304	X5CrNi18-10(1.4301)
048-1	IMPELLER NUT(A)	1	304 Stainless steel	SUS304	X5CrNi18-10(1.4301)
048-2	IMPELLER NUT(B)	1	304 Stainless steel	SUS304	X5CrNi18-10(1.4301)
107-1	CASING RING	1	Bronze	CAC406	CuSn5Zn5Pb5(CC491K)
107-2	CASING RING	1	Bronze	CAC406	CuSn5Zn5Pb5(CC491K)
111	MECHANICAL SEAL	1	Elastomer bellows seal	C/SiC/EPDM/316	BQ1EGG
115	O-RING	1	Rubber	EPDM	
014#	HANDHOLE COVER#	1	Cast Iron (ED painted)	FC250	
117#	HANDHOLE GASKET#	1	(Joint sheet gasket)	V#6500	
120-X*	BOLT (with PLAIN WASHER)	X*	Steel, Zn plated	SS400	
120-3	STUD BOLT (with SPRING & PLAIN WASHER)	4	CrMo Steel (Steel, Zn plated)	SCM435/S45C/SS	AISI4135/C45/SS
130	HEXAGON SOCKET SET SCREW	2	CrMo Steel	SCM435	AISI4135
137-1	PLAIN WASHER	4	304 Stainless steel	SUS304	X5CrNi18-10(1.4301)
137-2	SPRING LOCK WASHER	4	304 Stainless steel	SUS304	X5CrNi18-10(1.4301)
144	HUB	1	Carbon Steel	S35C	C35
160	BASE	1	Galvanised Steel	SS400	
162	MOTOR SPACER**	1**		SS400 or FC150	
193	PLUG	1	Steel, Zn plated	SS	
217	PLUG	1	Steel, Zn plated	SS	
319	SPRING PIN	2	420 Stainless steel	SUS420J1	X20Cr13(1.4021)
800	MOTOR	1			

120-X = 120-1,-2,-4,-5,-6,-7,-8,-9,-10,-11,-12* ** qty depends on model* *** see note next to drawing above*

Configurations

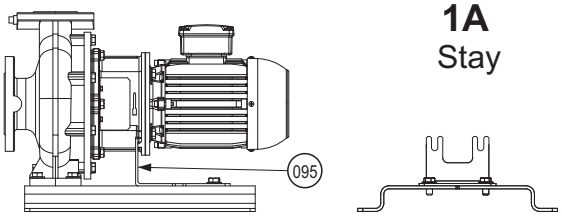

1A
Stay

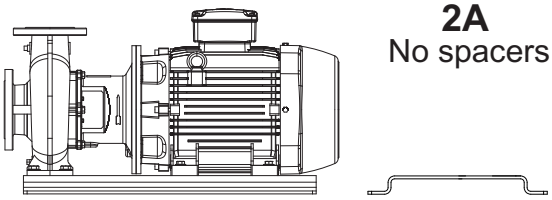

2A
No spacers

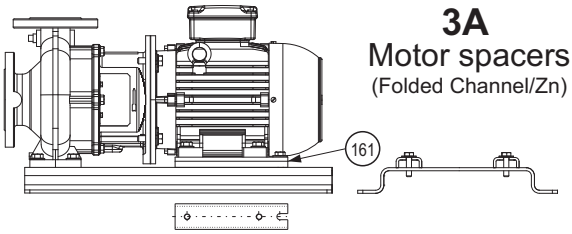

3A
Motor spacers
(Folded Channel/Zn)

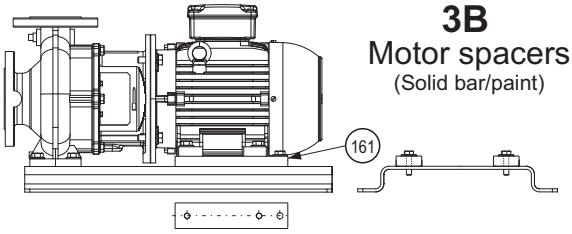

3B
Motor spacers
(Solid bar/paint)

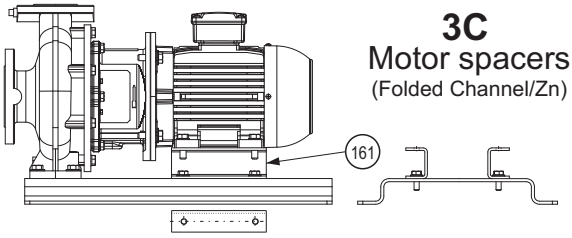

3C
Motor spacers
(Folded Channel/Zn)

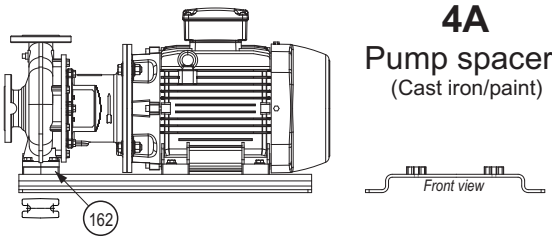

4A
Pump spacers
(Cast iron/paint)

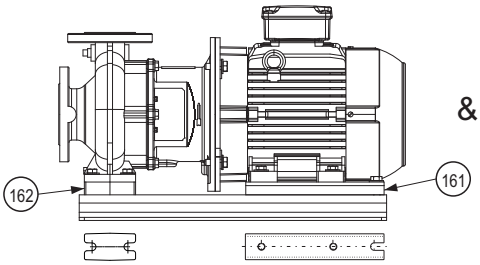

5A
Pump spacers
(Cast iron/paint)
&
Motor spacers
(Folded Channel/Zn)

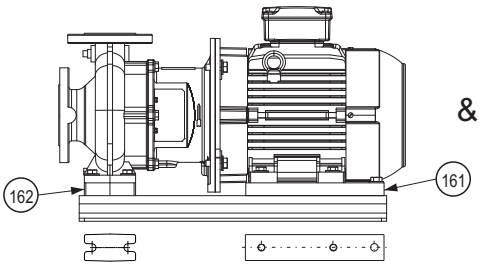

5B
Pump spacers
(Cast iron/paint)
&
Motor spacers
(Solid bar/paint)

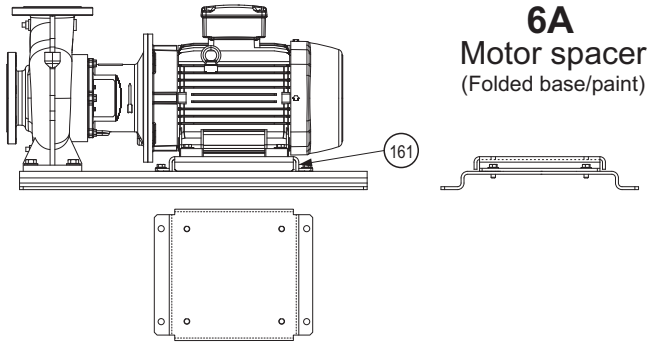

6A
Motor spacer
(Folded base/paint)

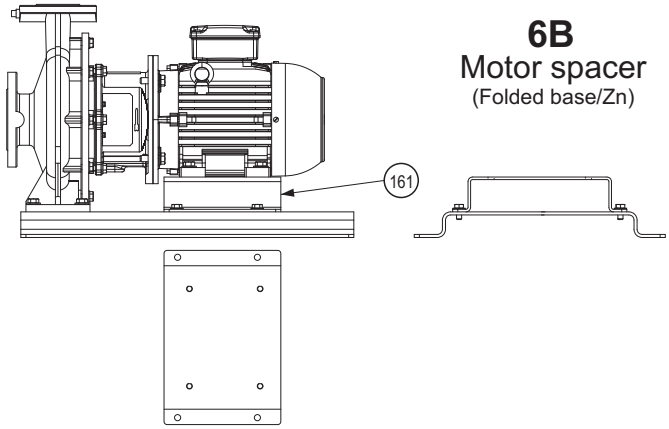

6B
Motor spacer
(Folded base/Zn)

Item	Description	Material	Finish	Style	Qty.	Applies to
095	Stay	Folded steel	Paint	-	1	1A
161	Motor spacer	Steel bar	Paint	Rectangular	2	3B,5B
		Folded steel	Zn plated	Channel (down)	2	3A,5A
			Zn plated	Channel (side)	2	3C
			Paint	Baseplate	1	6A
			Zn plated	Baseplate	1	6B
162	Pump spacer	Cast iron	Paint	-	2,4,6	4A,5A,5B

Mechanical Seal

Maker: Eagle Burgmann
Standard: EN12756
Liquid handled: Fresh water
Liquid temperature: -10° to +120° C Note①
Maximum speed: 3600 rpm
Pressure range: -0.5 - 16 bar

Note①
When temperature is >80° C the stuffing box pressure (P_{box}) should be less than 10 bar where

$$P_{box} = (0.05 \times TH) + P_s$$

P_{box} = stuffing box pressure
TH = Total Head (Differential pressure)
P_s = Suction Pressure

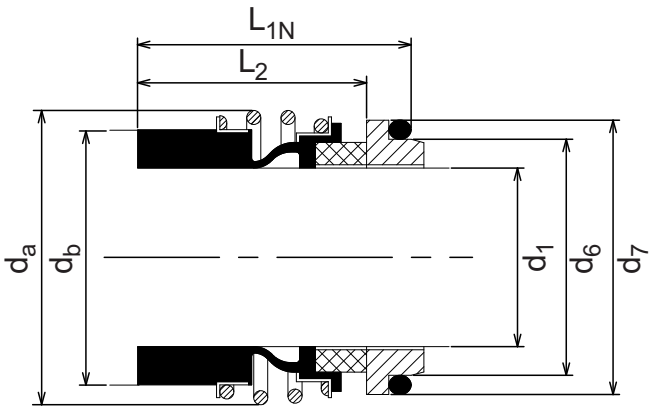

	Dimensions (mm)							Materials			
Model	d_1	d_a	d_b	d_6	d_7	L_{1N}	L_2	Rotating Face	Stationary Face	Elastomers	Spring etc.
MG13/28-G6-BQ1EGG	28	49	44	37	43	50	42.5	Carbon Graphite Resin Impregnated (B)	Silicon Carbide (Q1)	EPDM Ethylene Propylene Rubber (E)	316 Stainless Steel (GG)
MG13/38-G6-BQ1EGG	38	59	53	49	56	55	46				
MG13/48-G6-BQ1EGG	48	70.5	63	59	66	60	51				

Index of dimensions

DIMENSIONS

Dimensions with baseplate

Dimensional drawing	401
PN 16 Flange dimensions	401
Dimensions with baseplate (dimension tables) - 2 Pole models	402 - 404
Dimensions with baseplate (dimension tables) - 4 Pole models	405 - 407

Dimensions by configuration (without baseplate)

Type 1A - Drawing & dimensions	408 - 409
Type 2A - Drawing & dimensions	410 - 411
Type 3A - Drawing & dimensions	412 - 413
Type 3B - Drawing & dimensions	414 - 415
Type 3C - Drawing & dimensions	416 - 417
Type 4A - Drawing & dimensions	418 - 419
Type 5A - Drawing & dimensions	420 - 421
Type 5B - Drawing & dimensions	422 - 423
Type 6A - Drawing & dimensions	424 - 426
Type 6B - Drawing & dimensions	427 - 428

Dimensions of pump set only (no spacers or baseplate) - *for reference only*

Dimensional drawing	429
Dimensions - 2 Pole models	430 - 432
Dimensions - 4 Pole models	433 - 435

Pump end dimensions

Dimensional drawing	436
Dimensions table	437

Motor dimensions - WEG W21 IE3

Dimensional drawing	438
Dimensions table	439

Dimensions on baseplate

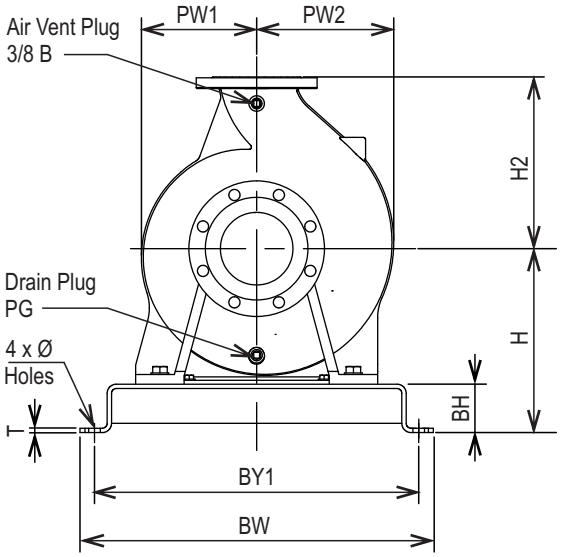

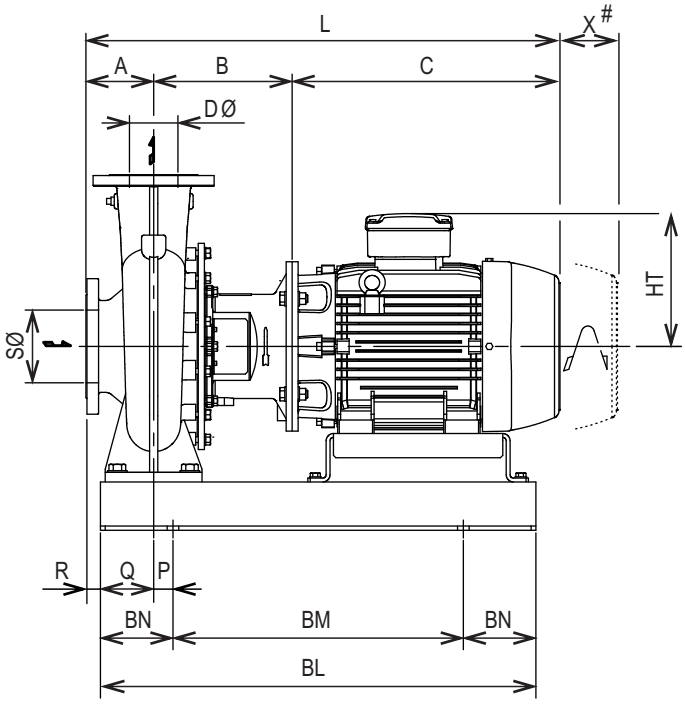

Typical arrangement only { *The use of stays, motor spacers, and/or pump spacers varies depending on the pump/motor combination. Refer to page 301 for more details.*

 # - X is the minimum free space required behind the motor to allow for the removal of the rotating element from the casing.

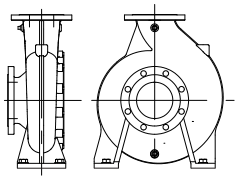

Refer to pages 436 & 437 for more detailed pump end dimensions.

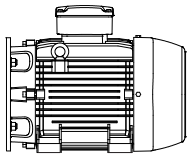

Refer to pages 438 & 439 for more detailed motor dimensions.

PN 16 Flange Dimensions

EN PN 16 FLANGES, Cast Iron

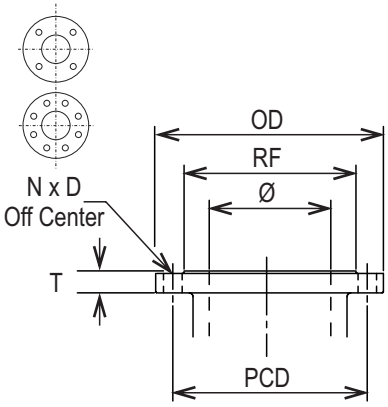

	Suction Flange						Discharge Flange					
Model	**SØ**	OD	PCD	RF	T	N x D	**DØ**	OD	PCD	RF	T	N x D
GSD 32	**50**	165	125	99	20	4x19Ø	**32**	140	100	76	18	4x19Ø
GSD 40	**65**	185	145	118	20	4x19Ø	**40**	150	110	84	18	4x19Ø
GSD 50	**65**	185	145	118	20	4x19Ø	**50**	165	125	99	20	4x19Ø
GSD 65	**80**	200	160	132	22	8x19Ø	**65**	185	145	118	20	4x19Ø
GSD 80	**100**	220	180	156	24	8x19Ø	**80**	200	160	132	22	8x19Ø
GSD 100	**125**	250	210	184	26	8x19Ø	**100**	220	180	156	24	8x19Ø
GSD 125	**150**	285	240	211	26	8x23Ø	**125**	250	210	184	26	8x19Ø
GSD 150	**200**	340	295	266	30	12x23Ø	**150**	285	240	211	26	8x23Ø

Dimensions on baseplate

2 pole models: 32-125 to 40-315

2 Pole models	SØ	DØ	Power kW	Motor Fr W21 IE3	Type	Dimensions - mm (refers to drawing on page 401)																						Weight kg
						A	B	BH	BL	BM	BN	BW	BY1	C	H	H2	HT	L	P	PG	PW1	PW2	Q	R	T	Ø	X	
GSD2 32-125	50	32	1.5	90S/L	1A	80	176	50	450	300	75	360	320	279	162	140	155	535	15	1/4B	103	115	60	20	6	15	100	56
			2.2	90S/L	1A	80	176	50	450	300	75	360	320	279	162	140	155	535	15	1/4B	103	115	60	20	6	15	100	58
			3	100L	5A	80	186	50	550	370	90	360	320	316	182	140	165	582	30	1/4B	103	115	60	20	6	15	100	72
GSD2 32-160	50	32	3	100L	3A	80	186	50	600	400	100	390	350	316	182	160	165	582	40	1/4B	120	130	60	20	6	15	100	75
			4	112M	3A	80	186	50	600	400	100	390	350	333	182	160	185	599	40	1/4B	120	130	60	20	6	15	100	82
			5.5	132S	5A	80	206	50	600	400	100	390	350	410	207	160	205	696	40	1/4B	120	130	60	20	6	15	100	109
GSD2 32-200	50	32	5.5	132S	3A	80	206	50	600	400	100	390	350	410	210	180	205	696	40	1/4B	138	149	60	20	6	15	100	117
			7.5	132S	3A	80	206	50	600	400	100	390	350	410	210	180	205	696	40	1/4B	138	149	60	20	6	15	100	123
			9.2	132M	3A	80	206	50	600	400	100	390	350	410	210	180	205	696	40	1/4B	138	149	60	20	6	15	100	131
			11	160M/L	5A	80	236	50	800	540	130	490	440	524	230	180	255	840	70	1/4B	138	149	60	20	8	24	100	196
			15	160M/L	5A	80	236	50	800	540	130	490	440	524	230	180	255	840	70	1/4B	138	149	60	20	8	24	100	199
GSD2 32-250	50	32	7.5	132S	3C	100	206	50	650	430	110	490	440	410	230	225	205	716	35	1/4B	162	172	75	25	6	19	100	136
			9.2	132M	3C	100	206	50	650	430	110	490	440	410	230	225	205	716	35	1/4B	162	172	75	25	6	19	100	144
			11	160M/L	3A	100	236	50	800	540	130	490	440	524	230	225	255	860	55	1/4B	162	172	75	25	8	24	100	204
			15	160M/L	3A	100	236	50	800	540	130	490	440	524	230	225	255	860	55	1/4B	162	172	75	25	8	24	100	207
			18.5	160M/L	3A	100	236	50	800	540	130	490	440	524	230	225	255	860	55	1/4B	162	172	75	25	8	24	100	215
GSD2 40-125	65	40	1.5	90S/L	1A	80	176	50	550	370	90	360	320	279	162	140	155	535	30	1/4B	105	124	60	20	6	15	100	60
			2.2	90S/L	1A	80	176	50	550	370	90	360	320	279	162	140	155	535	30	1/4B	105	124	60	20	6	15	100	62
			3	100L	5A	80	186	50	550	370	90	360	320	316	182	140	165	582	30	1/4B	105	124	60	20	6	15	100	73
			4	112M	5A	80	186	50	550	370	90	360	320	333	182	140	185	599	30	1/4B	105	124	60	20	6	15	100	79
			5.5	132S	5A	80	206	50	600	400	100	390	350	410	207	140	205	696	40	1/4B	105	124	60	20	6	15	100	109
GSD2 40-160	65	40	4	112M	3A	80	186	50	600	400	100	390	350	333	182	160	185	599	40	1/4B	122	140	60	20	6	15	100	84
			5.5	132S	5A	80	206	50	600	400	100	390	350	410	207	160	205	696	40	1/4B	122	140	60	20	6	15	100	112
			7.5	132S	5A	80	206	50	600	400	100	390	350	410	207	160	205	696	40	1/4B	122	140	60	20	6	15	100	118
			9.2	132M	5A	80	206	50	600	400	100	390	350	410	207	160	205	696	40	1/4B	122	140	60	20	6	15	100	126
			11	160M/L	5A	80	236	50	800	540	130	490	440	524	230	160	255	840	70	1/4B	122	140	60	20	8	24	100	191
GSD2 40-200	65	40	9.2	132M	3A	100	206	50	600	400	100	390	350	410	210	180	205	716	40	1/4B	143	160	60	40	6	15	100	134
			11	160M/L	5A	100	236	50	800	540	130	490	440	524	230	180	255	860	70	1/4B	143	160	60	40	8	24	100	200
			15	160M/L	5A	100	236	50	800	540	130	490	440	524	230	180	255	860	70	1/4B	143	160	60	40	8	24	100	203
			18.5	160M/L	5A	100	236	50	800	540	130	490	440	524	230	180	255	860	70	1/4B	143	160	60	40	8	24	100	211
GSD2 40-250	65	40	15	160M/L	3A	100	236	50	800	540	130	490	440	524	230	225	255	860	55	1/4B	164	176	75	25	8	24	100	209
			18.5	160M/L	3A	100	236	50	800	540	130	490	440	524	230	225	255	860	55	1/4B	164	176	75	25	8	24	100	217
			22	180M/L	2A	100	236	50	800	540	130	490	440	584	230	225	274	920	55	1/4B	164	176	75	25	8	24	100	251
			30	200M/L	5B	100	236	50	950	630	160	540	490	648	275	225	300	984	85	1/4B	164	176	75	25	8	24	100	334
GSD2 40-315	65	40	30	200M/L	3B	125	261	50	950	630	160	540	490	648	275	250	300	1034	85	1/4B	201	211	75	50	8	24	100	355
			37	200M/L	3B	125	261	50	950	630	160	540	490	648	275	250	300	1034	85	1/4B	201	211	75	50	8	24	100	367
			45	225S/M2P	5B	125	261	75	950	630	160	610	550	707	325	250	373	1093	85	1/4B	201	211	75	50	10	24	100	574
			55	250S/M2P	5B	125	291	75	1120	740	190	660	600	783	355	250	373	1199	115	1/4B	201	211	75	50	10	24	100	665

Type

The use of stays, motor spacers, and/or pump spacers varies depending on the pump/motor combination. Refer to page 301 for more details on the "types".

Dimensions on baseplate

2 pole models: 50-125 to 65-315

2 Pole models	SØ	DØ	Power kW	Motor Fr W21 IE3	Type	Dimensions - mm (refers to drawing on page 401)																						Weight kg
						A	B	BH	BL	BM	BN	BW	BY1	C	H	H2	HT	L	P	PG	PW1	PW2	Q	R	T	Ø	X	
GSD2 50-125	65	50	3	100L	3A	100	186	50	600	400	100	390	350	316	182	160	165	602	40	1/4B	120	145	60	40	6	15	100	80
			4	112M	3A	100	186	50	600	400	100	390	350	333	182	160	185	619	40	1/4B	120	145	60	40	6	15	100	86
			5.5	132S	5A	100	206	50	600	400	100	390	350	410	207	160	205	716	40	1/4B	120	145	60	40	6	15	100	114
			7.5	132S	5A	100	206	50	600	400	100	390	350	410	207	160	205	716	40	1/4B	120	145	60	40	6	15	100	120
GSD2 50-160	65	50	5.5	132S	3A	100	206	50	600	400	100	390	350	410	210	180	205	716	40	1/4B	133	149	60	40	6	15	100	113
			7.5	132S	3A	100	206	50	600	400	100	390	350	410	210	180	205	716	40	1/4B	133	149	60	40	6	15	100	119
			9.2	132M	3A	100	206	50	600	400	100	390	350	410	210	180	205	716	40	1/4B	133	149	60	40	6	15	100	127
			11	160M/L	5A	100	236	50	800	540	130	490	440	524	230	180	255	860	70	1/4B	133	149	60	40	8	24	100	193
			15	160M/L	5A	100	236	50	800	540	130	490	440	524	230	180	255	860	70	1/4B	133	149	60	40	8	24	100	196
GSD2 50-200	65	50	15	160M/L	5A	100	236	50	800	540	130	490	440	524	230	200	255	860	70	1/4B	144	163	60	40	8	24	100	205
			18.5	160M/L	5A	100	236	50	800	540	130	490	440	524	230	200	255	860	70	1/4B	144	163	60	40	8	24	100	213
			22	180M/L	4A	100	236	50	800	540	130	490	440	584	230	200	274	920	70	1/4B	144	163	60	40	8	24	100	247
			30	200M/L	5B	100	236	50	950	630	160	540	490	648	275	200	300	984	100	1/4B	144	163	60	40	8	24	100	328
GSD2 50-250	65	50	22	180M/L	2A	100	236	50	800	540	130	490	440	584	230	225	274	920	55	1/4B	166	180	75	25	8	24	100	252
			30	200M/L	5B	100	236	50	950	630	160	540	490	648	275	225	300	984	85	1/4B	166	180	75	25	8	24	100	335
			37	200M/L	5B	100	236	50	950	630	160	540	490	648	275	225	300	984	85	1/4B	166	180	75	25	8	24	100	347
			45	225S/M2P	5B	100	236	75	950	630	160	610	550	707	325	225	373	1043	85	1/4B	166	180	75	25	10	24	100	554
GSD2 50-315	65	50	45	225S/M2P	5B	125	261	75	950	630	160	610	550	707	325	280	373	1093	85	1/4B	205	220	75	50	10	24	100	578
			55	250S/M2P	5B	125	291	75	1120	740	190	660	600	783	355	280	373	1199	115	1/4B	205	220	75	50	10	24	100	670
			75	250S/M2P	5B	125	291	75	1120	740	190	660	600	783	355	280	373	1199	115	1/4B	205	220	75	50	10	24	100	700
GSD2 65-125	80	65	5.5	132S	3A	100	206	50	650	430	110	450	400	410	210	180	205	716	35	1/4B	140	160	75	25	6	19	100	119
			7.5	132S	3A	100	206	50	650	430	110	450	400	410	210	180	205	716	35	1/4B	140	160	75	25	6	19	100	125
			9.2	132M	3A	100	206	50	650	430	110	450	400	410	210	180	205	716	35	1/4B	140	160	75	25	6	19	100	133
			11	160M/L	5A	100	236	50	800	540	130	490	440	524	230	180	255	860	55	1/4B	140	160	75	25	8	24	100	197
GSD2 65-160	80	65	7.5	132S	3A	100	206	50	650	430	110	450	400	410	210	200	205	716	35	1/4B	146	174	75	25	6	19	100	128
			9.2	132M	3A	100	206	50	650	430	110	450	400	410	210	200	205	716	35	1/4B	146	174	75	25	6	19	100	136
			11	160M/L	5A	100	236	50	800	540	130	490	440	524	230	200	255	860	55	1/4B	146	174	75	25	8	24	100	200
			15	160M/L	5A	100	236	50	800	540	130	490	440	524	230	200	255	860	55	1/4B	146	174	75	25	8	24	100	203
			18.5	160M/L	5A	100	236	50	800	540	130	490	440	524	230	200	255	860	55	1/4B	146	174	75	25	8	24	100	211
GSD2 65-200	80	65	15	160M/L	3A	100	236	50	800	540	130	490	440	524	230	225	255	860	55	1/4B	160	177	75	25	8	24	140	206
			18.5	160M/L	3A	100	236	50	800	540	130	490	440	524	230	225	255	860	55	1/4B	160	177	75	25	8	24	140	214
			22	180M/L	2A	100	236	50	800	540	130	490	440	584	230	225	274	920	55	1/4B	160	177	75	25	8	24	140	248
			30	200M/L	5B	100	236	50	950	630	160	540	490	648	275	225	300	984	85	1/4B	160	177	75	25	8	24	140	331
			37	200M/L	5B	100	236	50	950	630	160	540	490	648	275	225	300	984	85	1/4B	160	177	75	25	8	24	140	343
GSD2 65-250	80	65	30	200M/L	5B	100	261	50	950	630	160	540	490	648	275	250	300	1009	70	1/4B	182	207	90	10	8	24	140	350
			37	200M/L	5B	100	261	50	950	630	160	540	490	648	275	250	300	1009	70	1/4B	182	207	90	10	8	24	140	362
			45	225S/M2P	5B	100	261	75	950	630	160	610	550	707	325	250	373	1068	70	1/4B	182	207	90	10	10	24	140	570
			55	250S/M2P	5B	100	291	75	1120	740	190	660	600	783	355	250	373	1174	100	1/4B	182	207	90	10	10	24	140	664
			75	250S/M2P	5B	100	291	75	1120	740	190	660	600	783	355	250	373	1174	100	1/4B	182	207	90	10	10	24	140	694
GSD2 65-315	80	65	75	250S/M2P	5B	125	291	75	1120	740	190	660	600	783	355	280	373	1199	100	1/4B	205	223	90	35	10	24	140	704
			90	280S/M2P	4A	125	291	100	1120	740	190	730	670	896	380	280	468	1312	100	1/4B	205	223	90	35	10	24	140	982
			110	280S/M2P	4A	125	291	100	1120	740	190	730	670	896	380	280	468	1312	100	1/4B	205	223	90	35	10	24	140	1032

Dimensions on baseplate

2 pole models: 80-160 to 150-200

2 Pole models	SØ	DØ	Power kW	Motor Fr W21 IE3	Type	Dimensions - mm (refers to drawing on page 401)																						Weight kg
						A	B	BH	BL	BM	BN	BW	BY1	C	H	H2	HT	L	P	PG	PW1	PW2	Q	R	T	Ø	X	
GSD2 80-160	100	80	11	160M/L	3A	125	236	50	800	540	130	490	440	524	230	225	255	885	55	1/4B	160	194	75	50	8	24	140	207
			15	160M/L	3A	125	236	50	800	540	130	490	440	524	230	225	255	885	55	1/4B	160	194	75	50	8	24	140	210
			18.5	160M/L	3A	125	236	50	800	540	130	490	440	524	230	225	255	885	55	1/4B	160	194	75	50	8	24	140	218
			22	180M/L	2A	125	236	50	800	540	130	490	440	584	230	225	274	945	55	1/4B	160	194	75	50	8	24	140	251
			30	200M/L	5B	125	236	50	950	630	160	540	490	648	275	225	300	1009	85	1/4B	160	194	75	50	8	24	140	335
GSD2 80-200	100	80	22	180M/L	2A	125	261	50	800	540	130	490	440	584	230	250	274	970	55	1/4B	173	196	75	50	8	24	140	259
			30	200M/L	5B	125	261	50	950	630	160	540	490	648	275	250	300	1034	85	1/4B	173	196	75	50	8	24	140	343
			37	200M/L	5B	125	261	50	950	630	160	540	490	648	275	250	300	1034	85	1/4B	173	196	75	50	8	24	140	355
			45	225S/M2P	5B	125	261	75	950	630	160	610	550	707	325	250	373	1093	85	1/4B	173	196	75	50	10	24	140	561
			55	250S/M2P	5B	125	291	75	1120	740	190	660	600	783	355	250	373	1199	115	1/4B	173	196	75	50	10	24	140	653
			75	250S/M2P	5B	125	291	75	1120	740	190	660	600	783	355	250	373	1199	115	1/4B	173	196	75	50	10	24	140	683
GSD2 80-250	100	80	55	250S/M2P	5B	125	291	75	1120	740	190	660	600	783	355	280	373	1199	100	1/4B	200	216	90	35	10	24	140	670
			75	250S/M2P	5B	125	291	75	1120	740	190	660	600	783	355	280	373	1199	100	1/4B	200	216	90	35	10	24	140	700
			90	280S/M2P	4A	125	291	100	1120	740	190	730	670	896	380	280	468	1312	100	1/4B	200	216	90	35	10	24	140	978
			110	280S/M2P	4A	125	291	100	1120	740	190	730	670	896	380	280	468	1312	100	1/4B	200	216	90	35	10	24	140	1028
GSD2 100-160	125	100	15	160M/L	6A	125	261	50	950	630	160	540	490	524	250	250	255	910	70	3/8B	180	190	90	35	8	24	140	234
			18.5	160M/L	6A	125	261	50	950	630	160	540	490	524	250	250	255	910	70	3/8B	180	190	90	35	8	24	140	242
			22	180M/L	3B	125	261	50	950	630	160	540	490	584	250	250	274	970	70	3/8B	180	190	90	35	8	24	140	274
			30	200M/L	5B	125	261	50	950	630	160	540	490	648	275	250	300	1034	70	3/8B	180	190	90	35	8	24	140	342
			37	200M/L	5B	125	261	50	950	630	160	540	490	648	275	250	300	1034	70	3/8B	180	190	90	35	8	24	140	354
GSD2 100-200	125	100	30	200M/L	5B	125	261	50	950	630	160	540	490	648	275	280	300	1034	70	3/8B	182	220	90	35	8	24	140	359
			37	200M/L	5B	125	261	50	950	630	160	540	490	648	275	280	300	1034	70	3/8B	182	220	90	35	8	24	140	371
			45	225S/M2P	5B	125	261	75	950	630	160	610	550	707	325	280	373	1093	70	3/8B	182	220	90	35	10	24	140	579
			55	250S/M2P	5B	125	291	75	1120	740	190	660	600	783	355	280	373	1199	100	3/8B	182	220	90	35	10	24	140	673
			75	250S/M2P	5B	125	291	75	1120	740	190	660	600	783	355	280	373	1199	100	3/8B	182	220	90	35	10	24	140	703
GSD2 100-250	125	100	55	250S/M2P	5B	140	291	75	1120	740	190	660	600	783	355	280	373	1214	100	3/8B	200	215	90	50	10	24	140	671
			75	250S/M2P	5B	140	291	75	1120	740	190	660	600	783	355	280	373	1214	100	3/8B	200	215	90	50	10	24	140	701
			90	280S/M2P	4A	140	291	100	1120	740	190	730	670	896	380	280	468	1327	100	3/8B	200	215	90	50	10	24	140	978
			110	280S/M2P	4A	140	291	100	1120	740	190	730	670	896	380	280	468	1327	100	3/8B	200	215	90	50	10	24	140	1028
GSD2 125-200	150	125	55	250S/M2P	5B	140	291	75	1120	740	190	660	600	783	355	315	373	1214	100	3/8B	200	247	90	50	10	24	140	679
			75	250S/M2P	5B	140	291	75	1120	740	190	660	600	783	355	315	373	1214	100	3/8B	200	247	90	50	10	24	140	709
			90	280S/M2P	4A	140	291	100	1120	740	190	730	670	896	380	315	468	1327	100	3/8B	200	247	90	50	10	24	140	987
			110	280S/M2P	4A	140	291	100	1120	740	190	730	670	896	380	315	468	1327	100	3/8B	200	247	90	50	10	24	140	1037
GSD2 150-200	200	150	37	200M/L	6A	160	261	100	1000	660	170	730	670	648	380	355	300	1069	60	3/8B	250	273	110	50	10	24	140	474
			45	225S/M2P	6A	160	261	100	1000	660	170	730	670	707	380	355	373	1128	60	3/8B	250	273	110	50	10	24	140	655
			55	250S/M2P	3B	160	291	100	1120	740	190	730	670	783	380	355	373	1234	80	3/8B	250	273	110	50	10	24	140	720
			75	250S/M2P	3B	160	291	100	1120	740	190	730	670	783	380	355	373	1234	80	3/8B	250	273	110	50	10	24	140	750
			90	280S/M2P	2A	160	291	100	1120	740	190	730	670	896	380	355	468	1347	80	3/8B	250	273	110	50	10	24	140	1019
			110	280S/M2P	2A	160	291	100	1120	740	190	730	670	896	380	355	468	1347	80	3/8B	250	273	110	50	10	24	140	1069

Dimensions on baseplate

4 pole models: 32-200 to 65-315

4 Pole models	SØ	DØ	Power kW	Motor Fr W21 IE3	Type	Dimensions - mm (refers to drawing on page 401)																						Weight kg
						A	B	BH	BL	BM	BN	BW	BY1	C	H	H2	HT	L	P	PG	PW1	PW2	Q	R	T	Ø	X	
GSD4 32-200	50	32	1.1	90S/L	1A	80	176	50	450	300	75	390	350	279	210	180	155	535	15	1/4B	138	149	60	20	6	15	100	69
			1.5	90S/L	1A	80	176	50	450	300	75	390	350	279	210	180	155	535	15	1/4B	138	149	60	20	6	15	100	70
GSD4 32-250	50	32	1.1	90S/L	1A	100	176	50	650	430	110	490	440	279	230	225	155	555	35	1/4B	162	172	75	25	6	19	100	86
			1.5	90S/L	1A	100	176	50	650	430	110	490	440	279	230	225	155	555	35	1/4B	162	172	75	25	6	19	100	88
			2.2	100L	3C	100	186	50	650	430	110	490	440	316	230	225	165	602	35	1/4B	162	172	75	25	6	19	100	100
GSD4 40-160	65	40	1.1	90S/L	1A	80	176	50	450	300	75	390	350	279	182	160	155	535	15	1/4B	122	140	60	20	6	15	100	62
GSD4 40-200	65	40	1.1	90S/L	1A	100	176	50	450	300	75	390	350	279	210	180	155	555	15	1/4B	143	160	60	40	6	15	100	72
			1.5	90S/L	1A	100	176	50	450	300	75	390	350	279	210	180	155	555	15	1/4B	143	160	60	40	6	15	100	74
			2.2	100L	3C	100	186	50	600	400	100	390	350	316	210	180	165	602	40	1/4B	143	160	60	40	6	15	100	90
GSD4 40-250	65	40	2.2	100L	3C	100	186	50	650	430	110	490	440	316	230	225	165	602	35	1/4B	164	176	75	25	6	19	100	102
			3	100L	3C	100	186	50	650	430	110	490	440	316	230	225	165	602	35	1/4B	164	176	75	25	6	19	100	107
			4	112M	6B	100	186	50	650	430	110	490	440	333	230	225	185	619	35	1/4B	164	176	75	25	6	19	100	110
GSD4 40-315	65	40	4	112M	1A	125	211	50	650	430	110	490	440	333	275	250	185	669	35	1/4B	201	211	75	50	6	19	100	137
			5.5	132S	6B	125	231	50	650	430	110	490	440	410	275	250	205	766	35	1/4B	201	211	75	50	6	19	100	155
			7.5	132M	6B	125	231	50	650	430	110	490	440	410	275	250	205	766	35	1/4B	201	211	75	50	6	19	100	163
GSD4 50-125	65	50	1.1	90S/L	1A	100	176	50	450	300	75	390	350	279	182	160	155	555	15	1/4B	120	145	60	40	6	15	100	64
GSD4 50-160	65	50	1.1	90S/L	1A	100	176	50	450	300	75	390	350	279	210	180	155	555	15	1/4B	133	149	60	40	6	15	100	65
			1.5	90S/L	1A	100	176	50	450	300	75	390	350	279	210	180	155	555	15	1/4B	133	149	60	40	6	15	100	67
GSD4 50-200	65	50	2.2	100L	3C	100	186	50	600	400	100	390	350	316	210	200	165	602	40	1/4B	144	163	60	40	6	15	100	93
			3	100L	3C	100	186	50	600	400	100	390	350	316	210	200	165	602	40	1/4B	144	163	60	40	6	15	100	98
GSD4 50-250	65	50	3	100L	3C	100	186	50	650	430	110	490	440	316	230	225	165	602	35	1/4B	166	180	75	25	6	19	100	108
			4	112M	6B	100	186	50	650	430	110	490	440	333	230	225	185	619	35	1/4B	166	180	75	25	6	19	100	111
			5.5	132S	3C	100	206	50	650	430	110	490	440	410	230	225	205	716	35	1/4B	166	180	75	25	6	19	100	129
GSD4 50-315	65	50	5.5	132S	6B	125	231	50	650	430	110	490	440	410	275	280	205	766	35	1/4B	205	220	75	50	6	19	100	159
			7.5	132M	6B	125	231	50	650	430	110	490	440	410	275	280	205	766	35	1/4B	205	220	75	50	6	19	100	167
			11	160M/L	6A	125	261	50	800	540	130	490	440	524	275	280	255	910	55	1/4B	205	220	75	50	8	24	100	241
GSD4 65-125	80	65	1.1	90S/L	1A	100	176	50	500	330	85	450	400	279	210	180	155	555	10	1/4B	140	160	75	25	6	15	100	72
			1.5	90S/L	1A	100	176	50	500	330	85	450	400	279	210	180	155	555	10	1/4B	140	160	75	25	6	15	100	73
GSD4 65-160	80	65	1.1	90S/L	1A	100	176	50	500	330	85	450	400	279	210	200	155	555	10	1/4B	146	174	75	25	6	15	100	75
			1.5	90S/L	1A	100	176	50	500	330	85	450	400	279	210	200	155	555	10	1/4B	146	174	75	25	6	15	100	76
			2.2	100L	3C	100	186	50	650	430	110	450	400	316	210	200	165	602	35	1/4B	146	174	75	25	6	19	100	92
GSD4 65-200	80	65	2.2	100L	3C	100	186	50	650	430	110	490	440	316	230	225	165	602	35	1/4B	160	177	75	25	6	19	140	100
			3	100L	3C	100	186	50	650	430	110	490	440	316	230	225	165	602	35	1/4B	160	177	75	25	6	19	140	104
			4	112M	6B	100	186	50	650	430	110	490	440	333	230	225	185	619	35	1/4B	160	177	75	25	6	19	140	107
GSD4 65-250	80	65	4	112M	6B	100	211	50	700	470	115	540	490	333	250	250	185	644	25	1/4B	182	207	90	10	8	19	140	135
			5.5	132S	6B	100	231	50	700	470	115	540	490	410	250	250	205	741	25	1/4B	182	207	90	10	8	19	140	144
			7.5	132M	6B	100	231	50	700	470	115	540	490	410	250	250	205	741	25	1/4B	182	207	90	10	8	19	140	161
GSD4 65-315	80	65	11	160M/L	6A	125	261	75	950	630	160	610	550	524	300	280	255	910	70	1/4B	205	223	90	35	10	24	140	272
			15	160M/L	6A	125	261	75	950	630	160	610	550	524	300	280	255	910	70	1/4B	205	223	90	35	10	24	140	281

Dimensions on baseplate

4 pole models: 80-160 to 100-400

4 Pole models	SØ	DØ	Power kW	Motor Fr W21 IE3	Type	Dimensions - mm (refers to drawing on page 401)																						Weight kg
						A	B	BH	BL	BM	BN	BW	BY1	C	H	H2	HT	L	P	PG	PW1	PW2	Q	R	T	Ø	X	
GSD4 80-160	100	80	1.5	90S/L	1A	125	176	50	650	430	110	490	440	279	230	225	155	580	35	1/4B	160	194	75	50	6	19	140	91
			2.2	100L	3C	125	186	50	650	430	110	490	440	316	230	225	165	627	35	1/4B	160	194	75	50	6	19	140	103
			3	100L	3C	125	186	50	650	430	110	490	440	316	230	225	165	627	35	1/4B	160	194	75	50	6	19	140	108
			4	112M	6B	125	186	50	650	430	110	490	440	333	230	225	185	644	35	1/4B	160	194	75	50	6	19	140	111
GSD4 80-200	100	80	3	100L	3C	125	211	50	650	430	110	490	440	316	230	250	165	652	35	1/4B	173	196	75	50	6	19	140	116
			4	112M	6B	125	211	50	650	430	110	490	440	333	230	250	185	669	35	1/4B	173	196	75	50	6	19	140	119
			5.5	132S	3C	125	231	50	650	430	110	490	440	410	230	250	205	766	35	1/4B	173	196	75	50	6	19	140	137
			7.5	132M	3C	125	231	50	650	430	110	490	440	410	230	250	205	766	35	1/4B	173	196	75	50	6	19	140	145
GSD4 80-250	100	80	7.5	132M	6B	125	231	75	750	500	125	610	550	410	250	280	205	766	35	1/4B	200	216	90	35	8	19	140	176
			11	160M/L	6A	125	261	75	950	630	160	610	550	524	275	280	255	910	70	1/4B	200	216	90	35	10	24	140	261
			15	160M/L	6A	125	261	75	950	630	160	610	550	524	275	280	255	910	70	1/4B	200	216	90	35	10	24	140	270
GSD4 80-315	100	80	11	160M/L	6A	125	261	75	950	630	160	610	550	524	325	315	255	910	70	1/4B	217	247	90	35	10	24	140	294
			15	160M/L	6A	125	261	75	950	630	160	610	550	524	325	315	255	910	70	1/4B	217	247	90	35	10	24	140	303
			18.5	180M/L	6A	125	261	75	950	630	160	610	550	584	325	315	274	970	70	1/4B	217	247	90	35	10	24	140	354
			22	180M/L	6A	125	261	75	950	630	160	610	550	584	325	315	274	970	70	1/4B	217	247	90	35	10	24	140	367
GSD4 80-400	100	80	22	180M/L	6A	125	286	75	950	630	160	610	550	584	355	355	274	995	70	1/4B	268	296	90	35	10	24	140	431
			30	200M/L	6A	125	286	75	1120	740	190	660	600	648	355	355	300	1059	100	1/4B	268	296	90	35	10	24	140	504
			37	225S/M4P	6A	125	316	75	1120	740	190	660	600	707	355	355	373	1148	100	1/4B	268	296	90	35	10	24	140	655
			45	225S/M4P	6A	125	316	75	1120	740	190	660	600	707	355	355	373	1148	100	1/4B	268	296	90	35	10	24	140	675
			55	250S/M4P	3B	125	316	75	1120	740	190	660	600	783	355	355	373	1224	100	1/4B	268	296	90	35	10	24	140	745
GSD4 100-160	125	100	2.2	100L	1A	125	211	50	700	470	115	540	490	316	250	250	165	652	25	3/8B	180	190	90	35	8	19	140	121
			3	100L	1A	125	211	50	700	470	115	540	490	316	250	250	165	652	25	3/8B	180	190	90	35	8	19	140	125
			4	112M	6B	125	211	50	700	470	115	540	490	333	250	250	185	669	25	3/8B	180	190	90	35	8	19	140	128
GSD4 100-200	125	100	3	100L	1A	125	211	50	700	470	115	540	490	316	250	280	165	652	25	3/8B	182	220	90	35	8	19	140	142
			4	112M	6B	125	211	50	700	470	115	540	490	333	250	280	185	669	25	3/8B	182	220	90	35	8	19	140	145
			5.5	132S	6B	125	231	50	700	470	115	540	490	410	250	280	205	766	25	3/8B	182	220	90	35	8	19	140	163
			7.5	132M	6B	125	231	50	700	470	115	540	490	410	250	280	205	766	25	3/8B	182	220	90	35	8	19	140	171
			11	160M/L	6A	125	261	50	950	630	160	540	490	524	250	280	255	910	70	3/8B	182	220	90	35	8	24	140	243
GSD4 100-250	125	100	7.5	132M	6B	140	231	50	750	500	125	610	550	410	275	280	205	781	35	3/8B	200	215	90	50	8	19	140	182
			11	160M/L	6A	140	261	75	950	630	160	610	550	524	300	280	255	925	70	3/8B	200	215	90	50	10	24	140	268
			15	160M/L	6A	140	261	75	950	630	160	610	550	524	300	280	255	925	70	3/8B	200	215	90	50	10	24	140	277
			18.5	180M/L	6A	140	261	75	950	630	160	610	550	584	300	280	274	985	70	3/8B	200	215	90	50	10	24	140	329
GSD4 100-315	125	100	11	160M/L	6A	140	261	75	950	630	160	610	550	524	325	315	255	925	70	3/8B	200	227	90	50	10	24	140	295
			15	160M/L	6A	140	261	75	950	630	160	610	550	524	325	315	255	925	70	3/8B	200	227	90	50	10	24	140	304
			18.5	180M/L	6A	140	261	75	950	630	160	610	550	584	325	315	274	985	70	3/8B	200	227	90	50	10	24	140	356
			22	180M/L	6A	140	261	75	950	630	160	610	550	584	325	315	274	985	70	3/8B	200	227	90	50	10	24	140	369
			30	200M/L	6A	140	261	75	950	630	160	610	550	648	325	315	300	1049	70	3/8B	200	227	90	50	10	24	140	426
GSD4 100-400	125	100	18.5	180M/L	6A	140	286	100	1000	660	170	730	670	584	380	355	274	1010	60	3/8B	264	291	110	30	10	24	140	454
			22	180M/L	6A	140	286	100	1000	660	170	730	670	584	380	355	274	1010	60	3/8B	264	291	110	30	10	24	140	467
			30	200M/L	6A	140	286	100	1120	740	190	730	670	648	380	355	300	1074	80	3/8B	264	291	110	30	10	24	140	531
			37	225S/M4P	6A	140	316	100	1120	740	190	730	670	707	380	355	373	1163	80	3/8B	264	291	110	30	10	24	140	683
			45	225S/M4P	6A	140	316	100	1120	740	190	730	670	707	380	355	373	1163	80	3/8B	264	291	110	30	10	24	140	703
			55	250S/M4P	3B	140	316	100	1120	740	190	730	670	783	380	355	373	1239	80	3/8B	264	291	110	30	10	24	140	772

Dimensions on baseplate

4 pole models: 125-200 to 150-400

4 Pole models	SØ	DØ	Power kW	Motor Fr W21 IE3	Type	Dimensions - mm (refers to drawing on page 401)																						Weight kg
						A	B	BH	BL	BM	BN	BW	BY1	C	H	H2	HT	L	P	PG	PW1	PW2	Q	R	T	Ø	X	
GSD4 125-200	150	125	5.5	132S	6B	140	231	75	750	500	125	610	550	410	300	315	205	781	35	3/8B	200	247	90	50	8	19	140	187
			7.5	132M	6B	140	231	75	750	500	125	610	550	410	300	315	205	781	35	3/8B	200	247	90	50	8	19	140	195
			11	160M/L	6A	140	261	75	950	630	160	610	550	524	325	315	255	925	70	3/8B	200	247	90	50	10	24	140	283
			15	160M/L	6A	140	261	75	950	630	160	610	550	524	325	315	255	925	70	3/8B	200	247	90	50	10	24	140	292
GSD4 125-250	150	125	11	160M/L	6A	140	261	75	950	630	160	610	550	524	325	355	255	925	70	3/8B	215	268	90	50	10	24	140	301
			15	160M/L	6A	140	261	75	950	630	160	610	550	524	325	355	255	925	70	3/8B	215	268	90	50	10	24	140	310
			18.5	180M/L	6A	140	261	75	950	630	160	610	550	584	325	355	274	985	70	3/8B	215	268	90	50	10	24	140	361
			22	180M/L	6A	140	261	75	950	630	160	610	550	584	325	355	274	985	70	3/8B	215	268	90	50	10	24	140	374
			30	200M/L	6A	140	261	75	950	630	160	610	550	648	325	355	300	1049	70	3/8B	215	268	90	50	10	24	140	432
GSD4 125-315	150	125	18.5	180M/L	6A	140	286	100	1000	660	170	730	670	584	380	355	274	1010	60	3/8B	250	282	110	30	10	24	140	417
			22	180M/L	6A	140	286	100	1000	660	170	730	670	584	380	355	274	1010	60	3/8B	250	282	110	30	10	24	140	430
			30	200M/L	6A	140	286	100	1120	740	190	730	670	648	380	355	300	1074	80	3/8B	250	282	110	30	10	24	140	495
			37	225S/M4P	6A	140	316	100	1120	740	190	730	670	709	380	355	373	1163	80	3/8B	250	282	110	30	10	24	140	646
GSD4 125-400	150	125	30	200M/L	6A	140	286	100	1120	740	190	730	670	648	415	400	300	1074	80	3/8B	274	312	110	30	10	24	140	542
			37	225S/M4P	6A	140	316	100	1120	740	190	730	670	707	415	400	373	1163	80	3/8B	274	312	110	30	10	24	140	696
			45	225S/M4P	6A	140	316	100	1120	740	190	730	670	707	415	400	373	1163	80	3/8B	274	312	110	30	10	24	140	716
			55	250S/M4P	6A	140	316	100	1120	740	190	730	670	783	415	400	373	1239	80	3/8B	274	312	110	30	10	24	140	796
			75	L250S/M	6A	140	316	100	1120	740	190	730	670	833	415	400	378	1289	80	3/8B	274	312	110	30	10	24	140	857
GSD4 150-200	200	150	5.5	132S	6B	160	231	100	1000	660	170	730	670	410	380	355	205	801	60	3/8B	250	273	110	50	10	24	140	268
			7.5	132M	6B	160	231	100	1000	660	170	730	670	410	380	355	205	801	60	3/8B	250	273	110	50	10	24	140	276
			11	160M/L	6A	160	261	100	1000	660	170	730	670	524	380	355	255	945	60	3/8B	250	273	110	50	10	24	140	343
GSD4 150-250	200	150	18.5	180M/L	6A	160	286	100	1000	660	170	730	670	584	380	375	274	1030	60	3/8B	250	300	110	50	10	24	140	439
			22	180M/L	6A	160	286	100	1000	660	170	730	670	584	380	375	274	1030	60	3/8B	250	300	110	50	10	24	140	452
			30	200M/L	6A	160	286	100	1120	740	190	730	670	648	380	375	300	1094	80	3/8B	250	300	110	50	10	24	140	516
			37	225S/M4P	6A	160	316	100	1120	740	190	730	670	709	380	375	373	1183	80	3/8B	250	300	110	50	10	24	140	668
			45	225S/M4P	6A	160	316	100	1120	740	190	730	670	709	380	375	373	1183	80	3/8B	250	300	110	50	10	24	140	688
** GSD4 150-315	200	150	22	180M/L	6A	160	286	100	1000	660	170	730	670	584	415	400	274	1030	60	3/8B	275	319	110	50	10	24	140	468
			30	200M/L	6A	160	286	100	1120	740	190	730	670	648	415	400	300	1094	80	3/8B	275	319	110	50	10	24	140	533
			37	225S/M4P	6A	160	316	100	1120	740	190	730	670	707	415	400	373	1183	80	3/8B	275	319	110	50	10	24	140	686
			45	225S/M4P	6A	160	316	100	1120	740	190	730	670	707	415	400	373	1183	80	3/8B	275	319	110	50	10	24	140	706
			55	250S/M4P	6A	160	316	100	1120	740	190	730	670	783	415	400	373	1259	80	3/8B	275	319	110	50	10	24	140	786
			75	L250S/M	6A	160	316	100	1120	740	190	730	670	833	415	400	378	1309	80	3/8B	275	319	110	50	10	24	140	847
GSD4 150-400	200	150	37	225S/M4P	6A	160	316	100	1120	740	190	730	670	707	415	450	373	1183	80	1/2B	277	393	110	50	10	24	140	745
			45	225S/M4P	6A	160	316	100	1120	740	190	730	670	707	415	450	373	1183	80	1/2B	277	393	110	50	10	24	140	765
			55	250S/M4P	6A	160	316	100	1120	740	190	730	670	783	415	450	373	1259	80	1/2B	277	393	110	50	10	24	140	845
			75	L250S/M	6A	160	316	100	1120	740	190	730	670	833	415	450	378	1309	80	1/2B	277	393	110	50	10	24	140	948

** *For 150-315 dimension H1 is 35mm higher than EN standard*

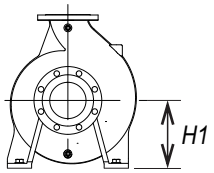

Dimensions without baseplate - Type 1A

Type 1A - Stay (folded steel, painted)

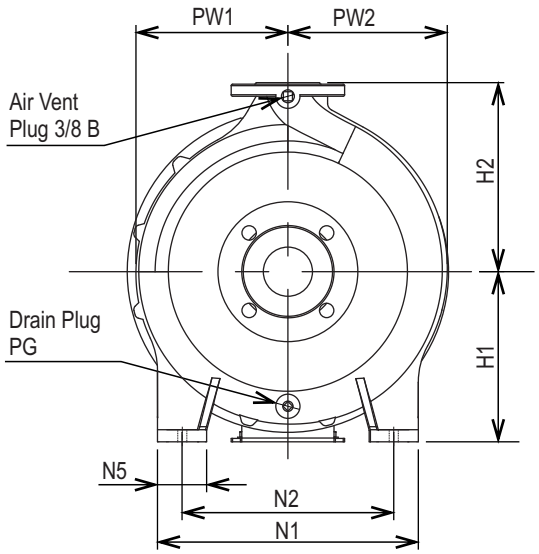

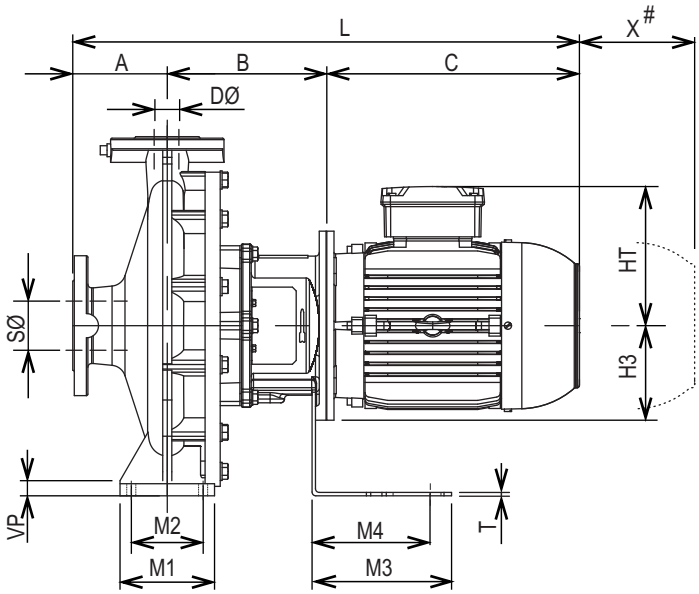

- X is the minimum free space required behind the motor to allow for the removal of the rotating element from the casing.

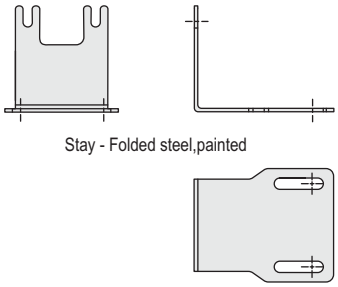

Stay - Folded steel,painted

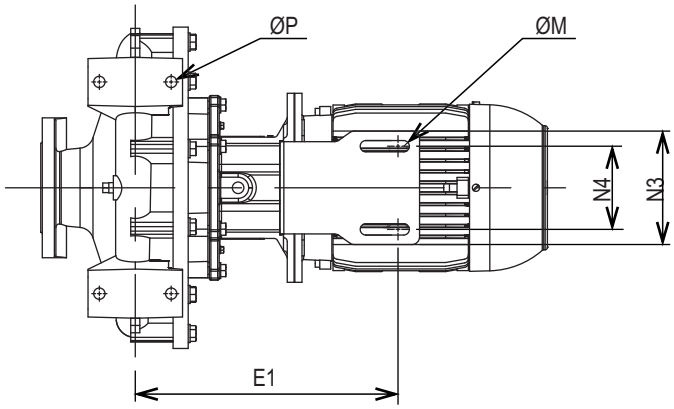

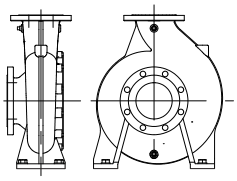

Refer to pages 436 & 437 for more detailed pump end dimensions.

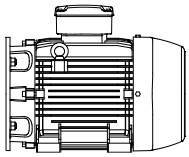

Refer to pages 438 & 439 for more detailed motor dimensions.

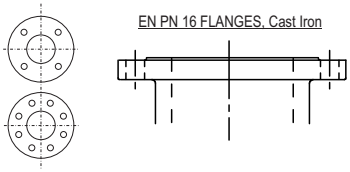

Refer to page 401 for flange dimensions.

Dimensions without baseplate - Type 1A

2 Pole Models	SØ	DØ	Power kW	Motor Fr W21 IE3	Type	Dimensions in mm (refers to drawing on page 408)																										Weight kg
						A	B	C	E1	H1	H2	H3	HT	L	M1	M2	M3	M4	N1	N2	N3	N4	N5	ØM	ØP	PG	PW1	PW2	T	VP	X	
GSD2 32-125	50	32	1.5	90S/L	1A	80	176	279	300	112	140	100	155	535	100	70	185	144	190	140	150	110	50	15	15	1/4B	103	115	4.5	10	100	47
GSD2 32-125	50	32	2.2	90S/L	1A	80	176	279	300	112	140	100	155	535	100	70	185	144	190	140	150	110	50	15	15	1/4B	103	115	4.5	10	100	49
GSD2 40-125	65	40	1.5	90S/L	1A	80	176	279	290	112	140	100	155	535	100	70	185	134	210	160	150	110	50	15	15	1/4B	105	124	4.5	13	100	48
GSD2 40-125	65	40	2.2	90S/L	1A	80	176	279	290	112	140	100	155	535	100	70	185	134	210	160	150	110	50	15	15	1/4B	105	124	4.5	13	100	50

4 Pole Models	SØ	DØ	Power kW	Motor Fr W21 IE3	Type	Dimensions in mm (refers to drawing on page 408)																										Weight kg
						A	B	C	E1	H1	H2	H3	HT	L	M1	M2	M3	M4	N1	N2	N3	N4	N5	ØM	ØP	PG	PW1	PW2	T	VP	X	
GSD4 32-200	50	32	1.1	90S/L	1A	80	176	279	310	160	180	100	155	535	100	70	185	154	240	190	150	110	50	15	15	1/4B	138	149	4.5	15	100	59
GSD4 32-200	50	32	1.5	90S/L	1A	80	176	279	310	160	180	100	155	535	100	70	185	154	240	190	150	110	50	15	15	1/4B	138	149	4.5	15	100	60
GSD4 32-250	50	32	1.1	90S/L	1A	100	176	279	315	180	225	100	155	555	125	95	185	159	320	250	150	110	65	15	15	1/4B	162	172	4.5	15	100	68
GSD4 32-250	50	32	1.5	90S/L	1A	100	176	279	315	180	225	100	155	555	125	95	185	159	320	250	150	110	65	15	15	1/4B	162	172	4.5	15	100	70
GSD4 40-160	65	40	1.1	90S/L	1A	80	176	279	310	132	160	100	155	535	100	70	185	154	240	190	150	110	50	15	15	1/4B	122	140	4.5	13	100	52
GSD4 40-200	65	40	1.1	90S/L	1A	100	176	279	310	160	180	100	155	555	100	70	185	154	265	212	150	110	50	15	15	1/4B	143	160	4.5	15	100	62
GSD4 40-200	65	40	1.5	90S/L	1A	100	176	279	310	160	180	100	155	555	100	70	185	154	265	212	150	110	50	15	15	1/4B	143	160	4.5	15	100	64
GSD4 40-315	65	40	4	112M	1A	125	211	333	348	225	250	125	185	669	125	95	185	156	345	280	150	110	65	15	15	1/4B	201	211	4.5	15	100	119
GSD4 50-125	65	50	1.1	90S/L	1A	100	176	279	310	132	160	100	155	555	100	70	185	154	240	190	150	110	50	15	15	1/4B	120	145	4.5	15	100	54
GSD4 50-160	65	50	1.1	90S/L	1A	100	176	279	310	160	180	100	155	555	100	70	185	154	265	212	150	110	50	15	15	1/4B	133	149	4.5	15	100	55
GSD4 50-160	65	50	1.5	90S/L	1A	100	176	279	310	160	180	100	155	555	100	70	185	154	265	212	150	110	50	15	15	1/4B	133	149	4.5	15	100	57
GSD4 65-125	80	65	1.1	90S/L	1A	100	176	279	308	160	180	100	155	555	125	95	185	151	280	212	150	110	65	15	15	1/4B	140	160	4.5	15	100	59
GSD4 65-125	80	65	1.5	90S/L	1A	100	176	279	308	160	180	100	155	555	125	95	185	151	280	212	150	110	65	15	15	1/4B	140	160	4.5	15	100	60
GSD4 65-160	80	65	1.1	90S/L	1A	100	176	279	308	160	200	100	155	555	125	95	185	151	280	212	150	110	65	15	15	1/4B	146	174	4.5	15	100	62
GSD4 65-160	80	65	1.5	90S/L	1A	100	176	279	308	160	200	100	155	555	125	95	185	151	280	212	150	110	65	15	15	1/4B	146	174	4.5	15	100	63
GSD4 80-160	100	80	1.5	90S/L	1A	125	176	279	300	180	225	100	155	580	125	95	185	144	320	250	150	110	65	15	15	1/4B	160	194	4.5	15	140	73
GSD4 100-160	125	100	2.2	100L	1A	125	211	316	345	200	250	125	165	652	160	120	185	154	360	280	150	110	80	15	19	3/8B	180	190	4.5	16	140	94
GSD4 100-160	125	100	3	100L	1A	125	211	316	345	200	250	125	165	652	160	120	185	154	360	280	150	110	80	15	19	3/8B	180	190	4.5	16	140	98
GSD4 100-200	125	100	3	100L	1A	125	211	316	345	200	280	125	165	652	160	120	185	154	360	280	150	110	80	15	19	3/8B	182	220	4.5	16	140	115

Dimensions without baseplate - Type 2A

Type 2A - No spacers

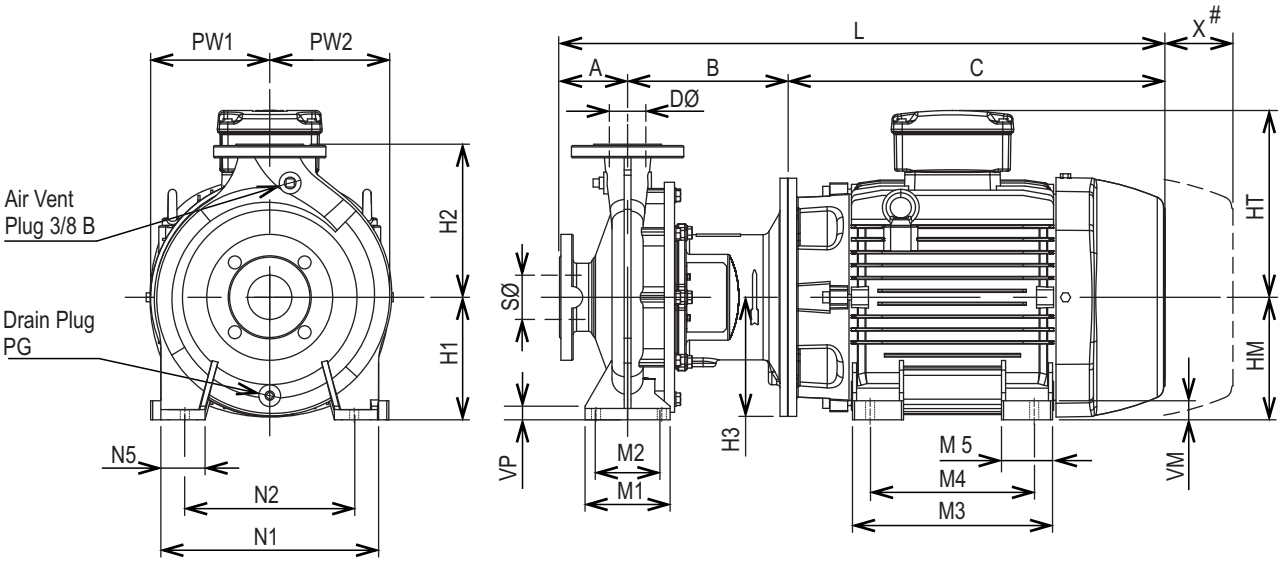

 # - X is the minimum free space required behind the motor to allow for the removal of the rotating element from the casing.

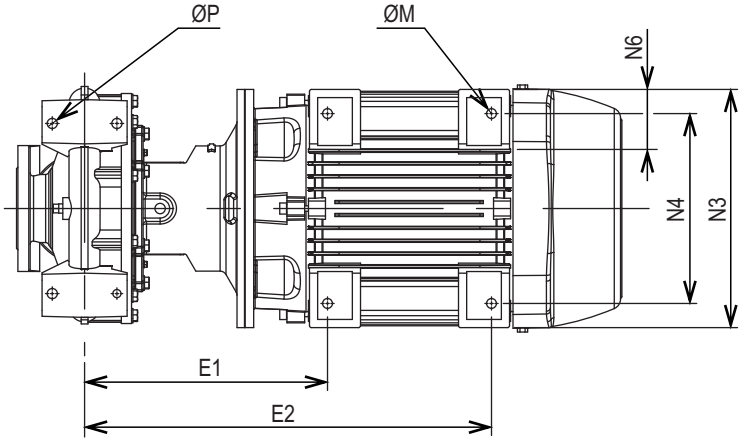

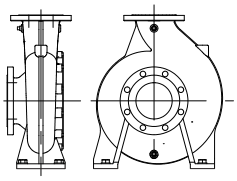

Refer to pages 436 & 437 for more detailed pump end dimensions.

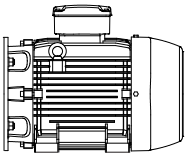

Refer to pages 438 & 439 for more detailed motor dimensions.

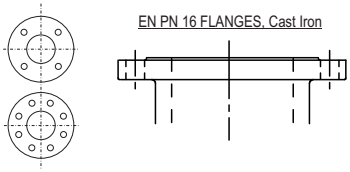

Refer to page 401 for flange dimensions.

Ebara End Suction Motor Pumps (to EN733)

Model **GSD**

Dimensions without baseplate - Type 2A

2 Pole Models	SØ	DØ	Power kW	Motor Fr W21 IE3	Type	Dimensions in mm (refers to drawing on page 410)																														Weight kg
						A	B	C	E1	E2	H1	H2	H3	HM	HT	L	M1	M2	M3	M4	M5	N1	N2	N3	N4	N5	N6	ØM	ØP	PG	PW1	PW2	VM	VP	X	
GSD2 40-250	65	40	22	180M/L	2A	100	236	584	357	636	180	225	175	180	274	920	125	95	332	279	75	320	250	350	279	65	68	14.5	15	1/4B	164	176	20	15	100	223
GSD2 50-250	65	50	22	180M/L	2A	100	236	584	357	636	180	225	175	180	274	920	125	95	332	279	75	320	250	350	279	65	68	14.5	15	1/4B	166	180	20	15	100	224
GSD2 65-200	80	65	22	180M/L	2A	100	236	584	357	636	180	225	175	180	274	920	125	95	332	279	75	320	250	350	279	65	68	14.5	15	1/4B	160	177	20	15	140	220
GSD2 80-160	100	80	22	180M/L	2A	125	236	584	357	636	180	225	175	180	274	945	125	95	332	279	75	320	250	350	279	65	68	14.5	15	1/4B	160	194	20	15	140	223
GSD2 80-200	100	80	22	180M/L	2A	125	261	584	382	661	180	250	175	180	274	970	125	95	332	279	75	345	280	350	279	65	68	14.5	15	1/4B	173	196	20	15	140	231
GSD2 150-200	200	150	90	280S/M2P	2A	160	291	896	481	900	280	355	275	280	468	1347	200	150	510	419	142	500	400	557	457	100	100	24	24	3/8B	250	273	42	20	140	937
GSD2 150-200	200	150	110	280S/M2P	2A	160	291	896	481	900	280	355	275	280	468	1347	200	150	510	419	142	500	400	557	457	100	100	24	24	3/8B	250	273	42	20	140	987

Dimensions without baseplate - Type 3A

Type 3A - Motor spacers (folded steel channel-down, zinc plated)

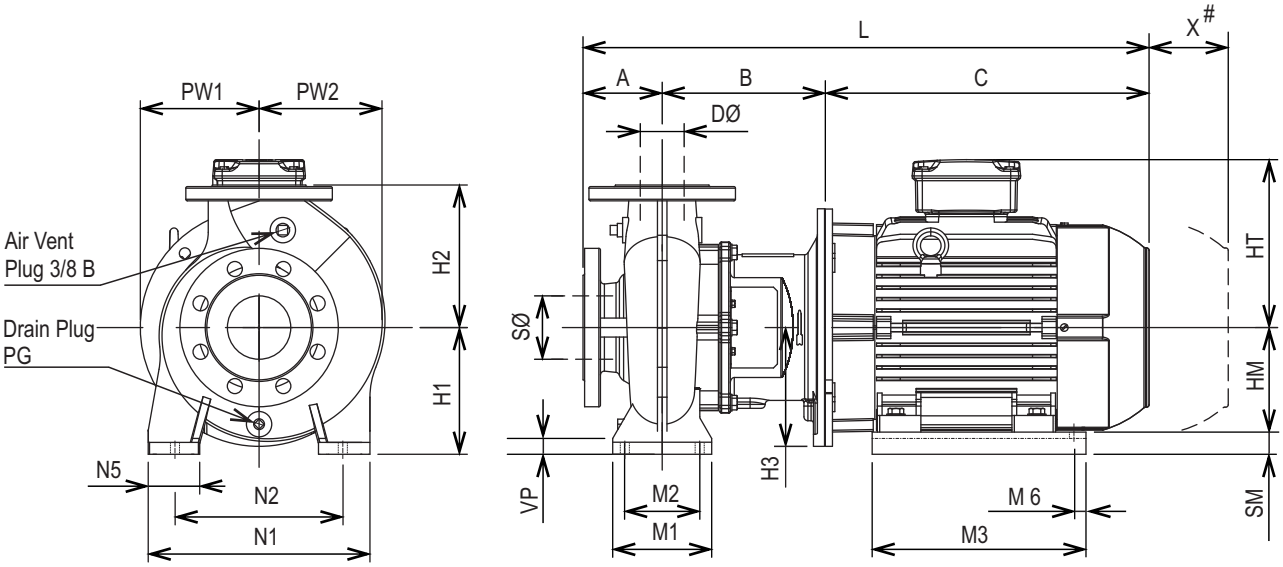

- X is the minimum free space required behind the motor to allow for the removal of the rotating element from the casing.

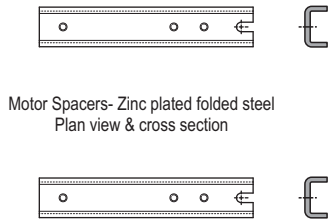

Motor Spacers- Zinc plated folded steel
Plan view & cross section

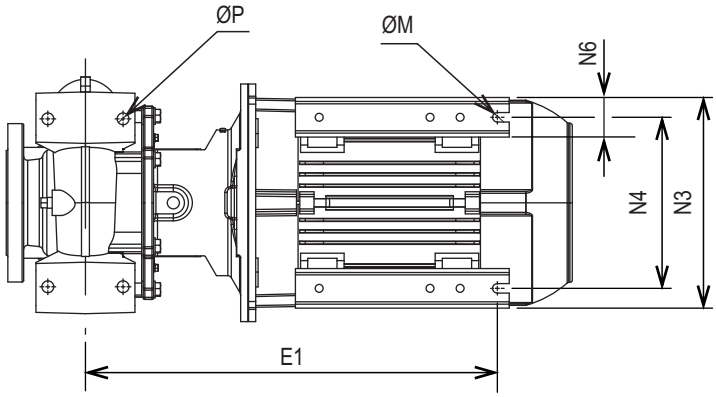

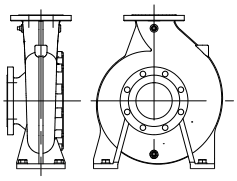

Refer to pages 436 & 437
for more detailed
pump end dimensions.

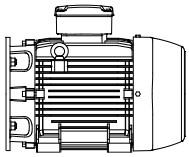

Refer to pages 438 & 439
for more detailed
motor dimensions.

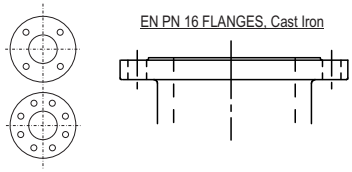

Refer to page 401
for flange dimensions.

Ebara End Suction Motor Pumps (to EN733)

Model **GSD**

Dimensions without baseplate - Type 3A

2 Pole Models	SØ	DØ	Power kW	Motor Fr W21 IE3	Type	Dimensions in mm (refers to drawing on page 412)																											Weight kg
						A	B	C	E1	H1	H2	H3	HM	HT	L	M1	M2	M3	M6	N1	N2	N3	N4	N5	N6	ØM	ØP	PG	PW1	PW2	SM	VP	X	
GSD2 32-160	50	32	3	100L	3A	80	186	316	389	132	160	125	100	165	582	100	70	220	15	240	190	200	160	50	40	12	15	1/4B	120	130	32	15	100	61
GSD2 32-160	50	32	4	112M	3A	80	186	333	396	132	160	125	112	185	599	100	70	220	15	240	190	240	190	50	50	12	15	1/4B	120	130	20	15	100	68
GSD2 32-200	50	32	5.5	132S	3A	80	206	410	435	160	180	150	132	205	696	100	70	270	15	240	190	266	216	50	50	12	15	1/4B	138	149	28	15	100	103
GSD2 32-200	50	32	7.5	132S	3A	80	206	410	435	160	180	150	132	205	696	100	70	270	15	240	190	266	216	50	50	12	15	1/4B	138	149	28	15	100	109
GSD2 32-200	50	32	9.2	132M	3A	80	206	410	473	160	180	150	132	205	696	100	70	270	15	240	190	266	216	50	50	12	15	1/4B	138	149	28	15	100	117
GSD2 32-250	50	32	11	160M/L	3A	100	236	524	598	180	225	175	160	255	860	125	95	350	20	320	250	314	254	65	60	14	15	1/4B	162	172	20	15	100	176
GSD2 32-250	50	32	15	160M/L	3A	100	236	524	598	180	225	175	160	255	860	125	95	350	20	320	250	314	254	65	60	14	15	1/4B	162	172	20	15	100	179
GSD2 32-250	50	32	18.5	160M/L	3A	100	236	524	598	180	225	175	160	255	860	125	95	350	20	320	250	314	254	65	60	14	15	1/4B	162	172	20	15	100	187
GSD2 40-160	65	40	4	112M	3A	80	186	333	396	132	160	125	112	185	599	100	70	220	15	240	190	240	190	50	50	12	15	1/4B	122	140	20	13	100	70
GSD2 40-200	65	40	9.2	132M	3A	100	206	410	473	160	180	150	132	205	716	100	70	270	15	265	212	266	216	50	50	12	15	1/4B	143	160	28	15	100	120
GSD2 40-250	65	40	15	160M/L	3A	100	236	524	598	180	225	175	160	255	860	125	95	350	20	320	250	314	254	65	60	14	15	1/4B	164	176	20	15	100	181
GSD2 40-250	65	40	18.5	160M/L	3A	100	236	524	598	180	225	175	160	255	860	125	95	350	20	320	250	314	254	65	60	14	15	1/4B	164	176	20	15	100	189
GSD2 50-125	65	50	3	100L	3A	100	186	316	389	132	160	125	100	165	602	100	70	220	15	240	190	200	160	50	40	12	15	1/4B	120	145	32	15	100	66
GSD2 50-125	65	50	4	112M	3A	100	186	333	396	132	160	125	112	185	619	100	70	220	15	240	190	240	190	50	50	12	15	1/4B	120	145	20	15	100	72
GSD2 50-160	65	50	5.5	132S	3A	100	206	410	435	160	180	150	132	205	716	100	70	270	15	265	212	266	216	50	50	12	15	1/4B	133	149	28	15	100	99
GSD2 50-160	65	50	7.5	132S	3A	100	206	410	435	160	180	150	132	205	716	100	70	270	15	265	212	266	216	50	50	12	15	1/4B	133	149	28	15	100	105
GSD2 50-160	65	50	9.2	132M	3A	100	206	410	473	160	180	150	132	205	716	100	70	270	15	265	212	266	216	50	50	12	15	1/4B	133	149	28	15	100	113
GSD2 65-125	80	65	5.5	132S	3A	100	206	410	435	160	180	150	132	205	716	125	95	270	15	280	212	266	216	65	50	12	15	1/4B	140	160	28	15	100	103
GSD2 65-125	80	65	7.5	132S	3A	100	206	410	435	160	180	150	132	205	716	125	95	270	15	280	212	266	216	65	50	12	15	1/4B	140	160	28	15	100	109
GSD2 65-125	80	65	9.2	132M	3A	100	206	410	473	160	180	150	132	205	716	125	95	270	15	280	212	266	216	65	50	12	15	1/4B	140	160	28	15	100	117
GSD2 65-160	80	65	7.5	132S	3A	100	206	410	435	160	200	150	132	205	716	125	95	270	15	280	212	266	216	65	50	12	15	1/4B	146	174	28	15	100	112
GSD2 65-160	80	65	9.2	132M	3A	100	206	410	473	160	200	150	132	205	716	125	95	270	15	280	212	266	216	65	50	12	15	1/4B	146	174	28	15	100	120
GSD2 65-200	80	65	15	160M/L	3A	100	236	524	598	180	225	175	160	255	860	125	95	350	20	320	250	314	254	65	60	14	15	1/4B	160	177	20	15	140	178
GSD2 65-200	80	65	18.5	160M/L	3A	100	236	524	598	180	225	175	160	255	860	125	95	350	20	320	250	314	254	65	60	14	15	1/4B	160	177	20	15	140	186
GSD2 80-160	100	80	11	160M/L	3A	125	236	524	598	180	225	175	160	255	885	125	95	350	20	320	250	314	254	65	60	14	15	1/4B	160	194	20	15	140	179
GSD2 80-160	100	80	15	160M/L	3A	125	236	524	598	180	225	175	160	255	885	125	95	350	20	320	250	314	254	65	60	14	15	1/4B	160	194	20	15	140	182
GSD2 80-160	100	80	18.5	160M/L	3A	125	236	524	598	180	225	175	160	255	885	125	95	350	20	320	250	314	254	65	60	14	15	1/4B	160	194	20	15	140	190

Dimensions without baseplate - Type 3B

Type 3B - Motor spacers (steel bar, painted)

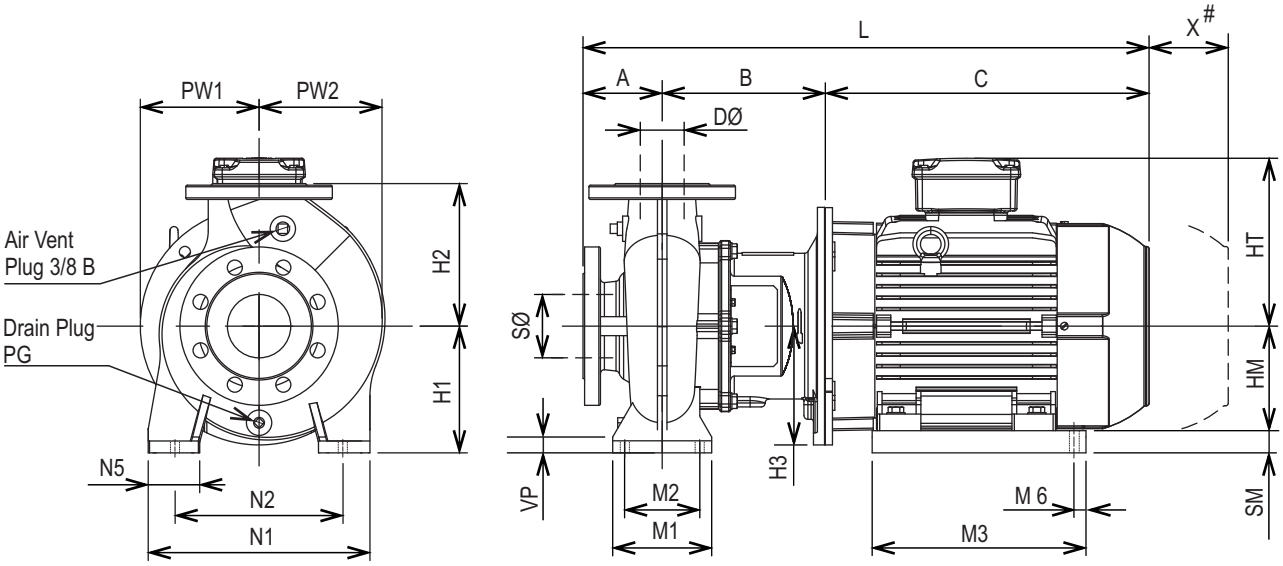

- X is the minimum free space required behind the motor to allow for the removal of the rotating element from the casing.

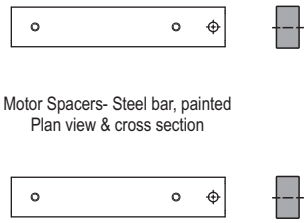

Motor Spacers- Steel bar, painted
Plan view & cross section

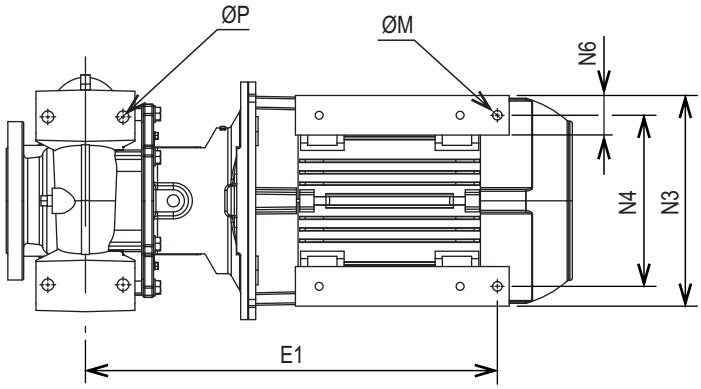

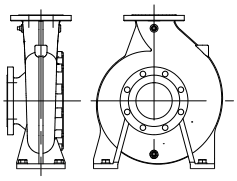

Refer to pages 436 & 437
for more detailed
pump end dimensions.

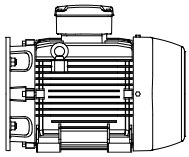

Refer to pages 438 & 439
for more detailed
motor dimensions.

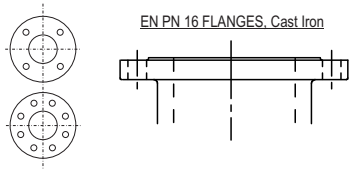

Refer to page 401
for flange dimensions.

Ebara End Suction Motor Pumps (to EN733)

Model **GSD**

Dimensions without baseplate - Type 3B

2 Pole Models	SØ	DØ	Power kW	Motor Fr W21 IE3	Type	Dimensions in mm *(refers to drawing on page 414)*																											Weight kg
						A	B	C	E1	H1	H2	H3	HM	HT	L	M1	M2	M3	M6	N1	N2	N3	N4	N5	N6	ØM	ØP	PG	PW1	PW2	SM	VP	X	
GSD2 40-315	65	40	30	200M/L	3B	125	261	648	699	225	250	200	200	300	1034	125	95	450	45	345	280	393	318	65	75	18	15	1/4B	201	211	25	15	100	318
GSD2 40-315	65	40	37	200M/L	3B	125	261	648	699	225	250	200	200	300	1034	125	95	450	45	345	280	393	318	65	75	18	15	1/4B	201	211	25	15	100	330
GSD2 100-160	125	100	22	180M/L	3B	125	261	584	661	200	250	175	180	274	970	160	120	400	45	360	280	344	279	80	65	14	19	3/8B	180	190	20	16	140	237
GSD2 150-200	200	150	55	250S/M2P	3B	160	291	783	808	280	355	275	250	373	1234	200	150	530	41	500	400	506	406	100	100	24	24	3/8B	250	273	30	20	140	638
GSD2 150-200	200	150	75	250S/M2P	3B	160	291	783	808	280	355	275	250	373	1234	200	150	530	41	500	400	506	406	100	100	24	24	3/8B	250	273	30	20	140	668
GSD4 80-400	100	80	55	250S/M4P	3B	125	316	783	833	280	355	275	250	373	1224	160	120	530	41	435	355	506	406	80	100	24	19	1/4B	268	296	30	19	140	672
GSD4 100-400	125	100	55	250S/M4P	3B	140	316	783	833	280	355	275	250	373	1239	200	150	530	41	500	400	506	406	100	100	24	24	3/8B	264	291	30	20	140	690

Dimensions without baseplate - Type 3C

Type 3C - Motor spacers (folded steel channel-side, zinc plated)

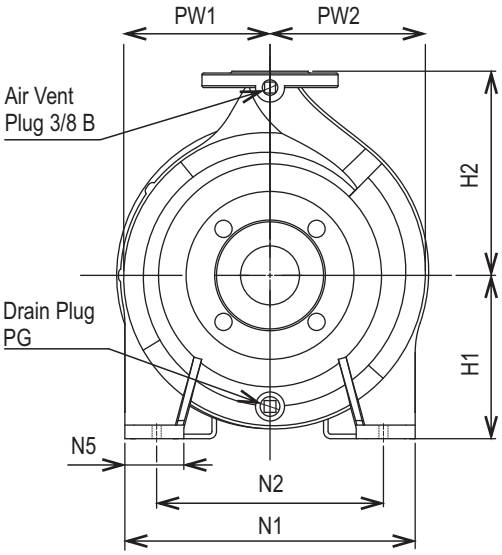

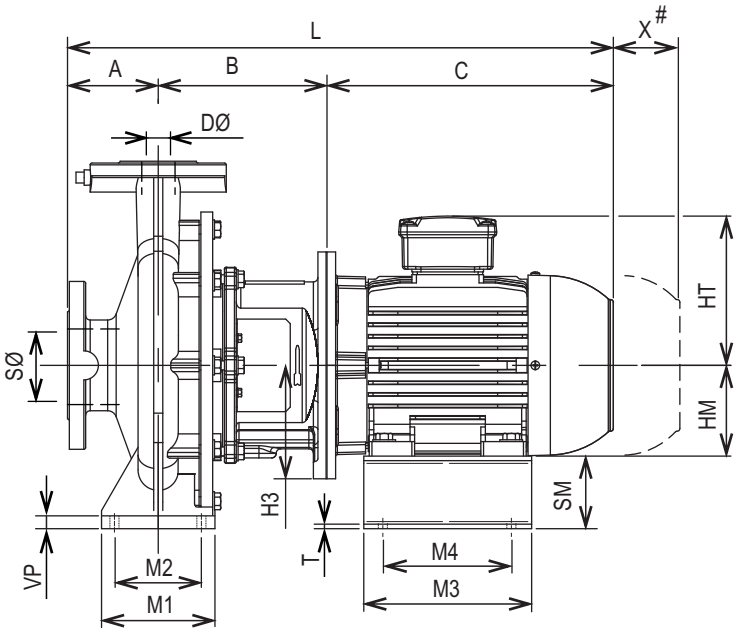

- X is the minimum free space required behind the motor to allow for the removal of the rotating element from the casing.

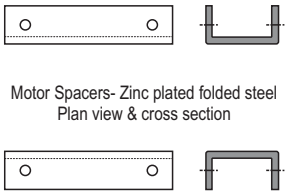

Motor Spacers- Zinc plated folded steel
Plan view & cross section

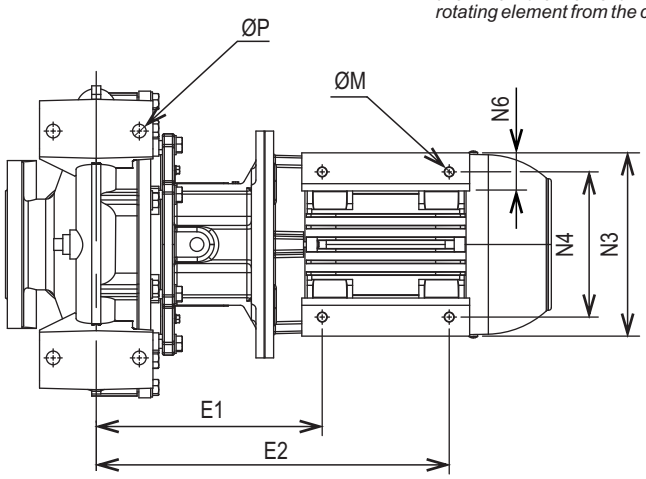

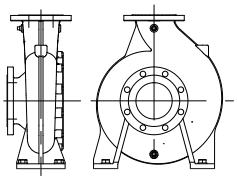

Refer to pages 436 & 437
for more detailed
pump end dimensions.

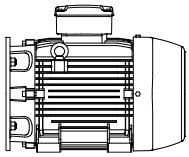

Refer to pages 438 & 439
for more detailed
motor dimensions.

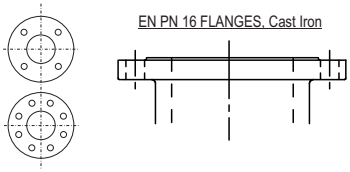

Refer to page 401
for flange dimensions.

Dimensions without baseplate - Type 3C

2 Pole Models	SØ	DØ	Power kW	Motor Fr W21 IE3	Type	Dimensions in mm (refers to drawing on page 416)																													Weight kg
						A	B	C	E1	E2	H1	H2	H3	HM	HT	L	M1	M2	M3	M4	N1	N2	N3	N4	N5	N6	ØM	ØP	PG	PW1	PW2	SM	T	VP	X	
GSD2 32-250	50	32	7.5	132S	3C	100	206	410	295	473	180	225	150	132	205	716	125	95	185	140	320	250	246	216	65	38	11	15	1/4B	162	172	48	5	15	100	118
GSD2 32-250	50	32	9.2	132M	3C	100	206	410	295	473	180	225	150	132	205	716	125	95	222	178	320	250	245	216	65	36	12	15	1/4B	162	172	48	4	15	100	126

4 Pole Models	SØ	DØ	Power kW	Motor Fr W21 IE3	Type	Dimensions in mm (refers to drawing on page 416)																													Weight kg
						A	B	C	E1	E2	H1	H2	H3	HM	HT	L	M1	M2	M3	M4	N1	N2	N3	N4	N5	N6	ØM	ØP	PG	PW1	PW2	SM	T	VP	X	
GSD4 32-250	50	32	2.2	100L	3C	100	186	316	249	389	180	225	125	100	165	602	125	95	185	140	320	250	202	160	65	42	11	15	1/4B	162	172	80	5	15	100	82
GSD4 40-200	65	40	2.2	100L	3C	100	186	316	249	389	160	180	125	100	165	602	100	70	185	140	265	212	202	160	50	42	11	15	1/4B	143	160	60	5	15	100	76
GSD4 40-250	65	40	2.2	100L	3C	100	186	316	249	389	180	225	125	100	165	602	125	95	185	140	320	250	202	160	65	42	11	15	1/4B	164	176	80	5	15	100	84
GSD4 40-250	65	40	3	100L	3C	100	186	316	249	389	180	225	125	100	165	602	125	95	185	140	320	250	202	160	65	42	11	15	1/4B	164	176	80	5	15	100	89
GSD4 50-200	65	50	2.2	100L	3C	100	186	316	249	389	160	200	125	100	165	602	100	70	185	140	265	212	202	160	50	42	11	15	1/4B	144	163	60	5	15	100	79
GSD4 50-200	65	50	3	100L	3C	100	186	316	249	389	160	200	125	100	165	602	100	70	185	140	265	212	202	160	50	42	11	15	1/4B	144	163	60	5	15	100	84
GSD4 50-250	65	50	3	100L	3C	100	186	316	249	389	180	225	125	100	165	602	125	95	185	140	320	250	202	160	65	42	11	15	1/4B	166	180	80	5	15	100	90
GSD4 50-250	65	50	5.5	132S	3C	100	206	410	295	435	180	225	150	132	205	716	125	95	185	140	320	250	246	216	65	38	11	15	1/4B	166	180	48	5	15	100	111
GSD4 65-160	80	65	2.2	100L	3C	100	186	316	249	389	160	200	125	100	165	602	125	95	185	140	280	212	202	160	65	42	11	15	1/4B	146	174	60	5	15	100	76
GSD4 65-200	80	65	2.2	100L	3C	100	186	316	249	389	180	225	125	100	165	602	125	95	185	140	320	250	202	160	65	42	11	15	1/4B	160	177	80	5	15	140	82
GSD4 65-200	80	65	3	100L	3C	100	186	316	249	389	180	225	125	100	165	602	125	95	185	140	320	250	202	160	65	42	11	15	1/4B	160	177	80	5	15	140	86
GSD4 80-160	100	80	2.2	100L	3C	125	186	316	249	389	180	225	125	100	165	627	125	95	185	140	320	250	202	160	65	42	11	15	1/4B	160	194	80	5	15	140	85
GSD4 80-160	100	80	3	100L	3C	125	186	316	249	389	180	225	125	100	165	627	125	95	185	140	320	250	202	160	65	42	11	15	1/4B	160	194	80	5	15	140	90
GSD4 80-200	100	80	3	100L	3C	125	211	316	274	414	180	250	125	100	165	652	125	95	185	140	345	280	202	160	65	42	11	15	1/4B	173	196	80	5	15	140	98
GSD4 80-200	100	80	5.5	132S	3C	125	231	410	320	460	180	250	150	132	205	766	125	95	185	140	345	280	250	216	65	38	11	15	1/4B	173	196	48	5	15	140	119
GSD4 80-200	100	80	7.5	132M	3C	125	231	410	320	498	180	250	150	132	205	766	125	95	222	178	345	280	245	216	65	36	12	15	1/4B	173	196	48	41	15	140	127

Dimensions without baseplate - Type 4A

Type 4A - Pump spacers (cast iron, painted)

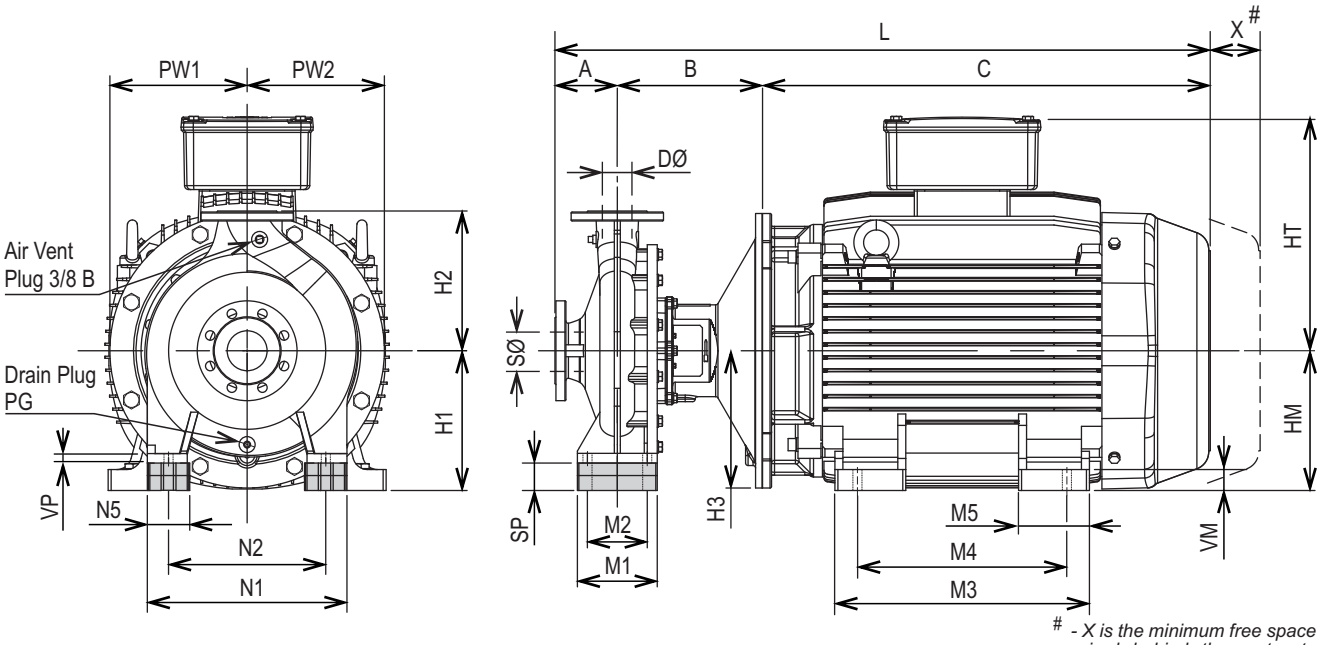

 # - X is the minimum free space required behind the motor to allow for the removal of the rotating element from the casing.

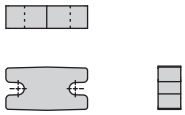

Pump Spacers- Cast iron (Painted)
Note: "packer" type, supplied loose

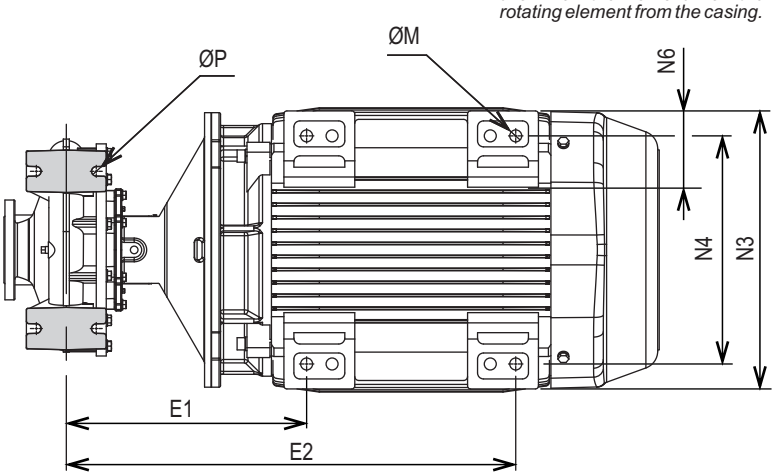

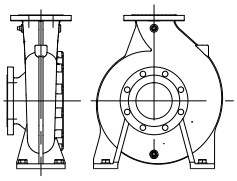

Refer to pages 436 & 437
for more detailed
pump end dimensions.

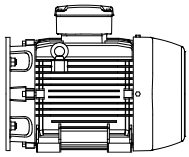

Refer to pages 438 & 439
for more detailed
motor dimensions.

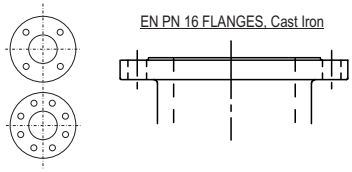

Refer to page 401
for flange dimensions.

Ebara End Suction Motor Pumps (to EN733)

Model **GSD**

Dimensions without baseplate - Type 4A

2 Pole Models	SØ	DØ	Power kW	Motor Fr W21 IE3	Type	Dimensions in mm (refers to drawing on page 418)																														Weight kg
						A	B	C	E1	E2	H1	H2	H3	HM	HT	L	M1	M2	M3	M4	M5	N1	N2	N3	N4	N5	N6	ØM	ØP	PG	PW1	PW2	SP	VM	VP	X	
GSD2 50-200	65	50	22	180M/L	4A	100	236	584	357	636	180	200	175	180	274	920	100	70	332	279	75	265	212	350	279	53	68	14.5	15	1/4B	144	163	20	20	15	100	219
GSD2 65-315	80	65	90	280S/M2P	4A	125	291	896	481	900	280	280	275	280	468	1312	160	120	510	419	142	400	315	557	457	85	100	24	19	1/4B	205	223	55	42	19	140	900
GSD2 65-315	80	65	110	280S/M2P	4A	125	291	896	481	900	280	280	275	280	468	1312	160	120	510	419	142	400	315	557	457	85	100	24	19	1/4B	205	223	55	42	19	140	950
GSD2 80-250	100	80	90	280S/M2P	4A	125	291	896	481	900	280	280	275	280	468	1312	160	120	510	419	142	400	315	557	457	85	100	24	19	1/4B	200	216	80	42	19	140	896
GSD2 80-250	100	80	110	280S/M2P	4A	125	291	896	481	900	280	280	275	280	468	1312	160	120	510	419	142	400	315	557	457	85	100	24	19	1/4B	200	216	80	42	19	140	946
GSD2 100-250	125	100	90	280S/M2P	4A	140	291	896	481	900	280	280	275	280	468	1327	160	120	510	419	142	400	315	557	457	85	100	24	19	3/8B	200	215	55	42	16	140	896
GSD2 100-250	125	100	110	280S/M2P	4A	140	291	896	481	900	280	280	275	280	468	1327	160	120	510	419	142	400	315	557	457	85	100	24	19	3/8B	200	215	55	42	16	140	946
GSD2 125-200	150	125	90	280S/M2P	4A	140	291	896	481	900	280	315	275	280	468	1327	160	120	510	419	142	400	315	557	457	85	100	24	19	3/8B	200	247	30	42	19	140	905
GSD2 125-200	150	125	110	280S/M2P	4A	140	291	896	481	900	280	315	275	280	468	1327	160	120	510	419	142	400	315	557	457	85	100	24	19	3/8B	200	247	30	42	19	140	955

Dimensions without baseplate - Type 5A

***Type 5A - Pump spacers** (cast iron, painted) **& Motor spacers** (folded steel channel-down, zinc plated)*

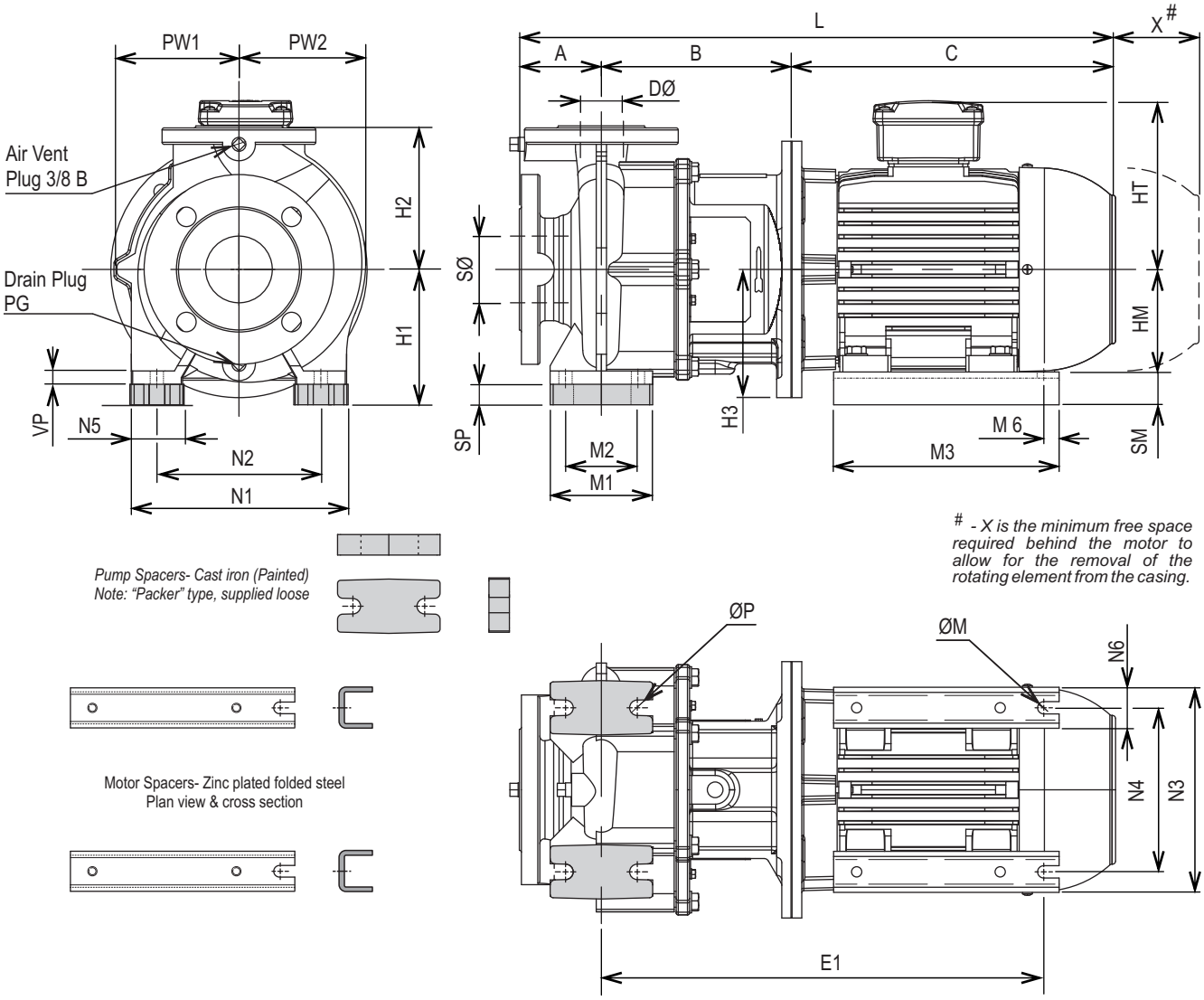

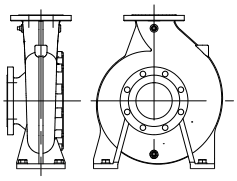

Refer to pages 436 & 437
for more detailed
pump end dimensions.

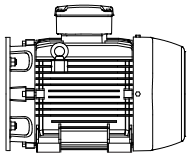

Refer to pages 438 & 439
for more detailed
motor dimensions.

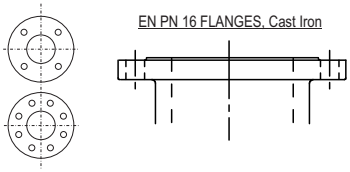

Refer to page 401
for flange dimensions.

Dimensions without baseplate - Type 5A

2 Pole Models	SØ	DØ	Power kW	Motor Fr W21 IE3	Type	Dimensions in mm (refers to drawing on page 420)																												Weight kg
						A	B	C	E1	H1	H2	H3	HM	HT	L	M1	M2	M3	M6	N1	N2	N3	N4	N5	N6	ØM	ØP	PG	PW1	PW2	SM	SP	VP	X	
GSD2 32-125	50	32	3	100L	5A	80	186	316	389	132	140	125	100	165	582	100	70	220	15	193	140	200	160	53	40	12	15	1/4B	103	115	32	20	10	100	60
GSD2 32-160	50	32	5.5	132S	5A	80	206	410	435	157	160	150	132	205	696	100	70	270	15	243	190	266	216	53	50	14	15	1/4B	120	130	25	25	15	100	95
GSD2 32-200	50	32	11	160M/L	5A	80	236	524	598	180	180	175	160	255	840	100	70	350	20	243	190	314	254	53	60	14	15	1/4B	138	149	20	20	15	100	168
GSD2 32-200	50	32	15	160M/L	5A	80	236	524	598	180	180	175	160	255	840	100	70	350	20	243	190	314	254	53	60	14	15	1/4B	138	149	20	20	15	100	171
GSD2 40-125	65	40	3	100L	5A	80	186	316	389	132	140	125	100	165	582	100	70	220	15	213	160	200	160	53	40	12	15	1/4B	105	124	32	20	13	100	61
GSD2 40-125	65	40	4	112M	5A	80	186	333	396	132	140	125	112	185	599	100	70	220	15	213	160	240	190	53	50	12	15	1/4B	105	124	20	20	13	100	67
GSD2 40-125	65	40	5.5	132S	5A	80	206	410	435	157	140	150	132	205	696	100	70	270	15	213	160	266	216	53	50	14	15	1/4B	105	124	25	45	13	100	95
GSD2 40-160	65	40	5.5	132S	5A	80	206	410	435	157	160	150	132	205	696	100	70	270	15	243	190	266	216	53	50	14	15	1/4B	122	140	25	25	13	100	98
GSD2 40-160	65	40	7.5	132S	5A	80	206	410	435	157	160	150	132	205	696	100	70	270	15	243	190	266	216	53	50	14	15	1/4B	122	140	25	25	13	100	104
GSD2 40-160	65	40	9.2	132M	5A	80	206	410	473	157	160	150	132	205	696	100	70	270	15	243	190	266	216	53	50	14	15	1/4B	122	140	25	25	13	100	112
GSD2 40-160	65	40	11	160M/L	5A	80	236	524	598	180	160	175	160	255	840	100	70	350	20	243	190	314	254	53	60	14	15	1/4B	122	140	20	48	13	100	163
GSD2 40-200	65	40	11	160M/L	5A	100	236	524	598	180	180	175	160	255	860	100	70	350	20	265	212	314	254	53	60	14	15	1/4B	143	160	20	20	15	100	172
GSD2 40-200	65	40	15	160M/L	5A	100	236	524	598	180	180	175	160	255	860	100	70	350	20	265	212	314	254	53	60	14	15	1/4B	143	160	20	20	15	100	175
GSD2 40-200	65	40	18.5	160M/L	5A	100	236	524	598	180	180	175	160	255	860	100	70	350	20	265	212	314	254	53	60	14	15	1/4B	143	160	20	20	15	100	183
GSD2 50-125	65	50	5.5	132S	5A	100	206	410	435	157	160	150	132	205	716	100	70	270	15	243	190	266	216	53	50	14	15	1/4B	120	145	25	25	15	100	100
GSD2 50-125	65	50	7.5	132S	5A	100	206	410	435	157	160	150	132	205	716	100	70	270	15	243	190	266	216	53	50	14	15	1/4B	120	145	25	25	15	100	106
GSD2 50-160	65	50	11	160M/L	5A	100	236	524	598	180	180	175	160	255	860	100	70	350	20	265	212	314	254	53	60	14	15	1/4B	133	149	20	20	15	100	165
GSD2 50-160	65	50	15	160M/L	5A	100	236	524	598	180	180	175	160	255	860	100	70	350	20	265	212	314	254	53	60	14	15	1/4B	133	149	20	20	15	100	168
GSD2 50-200	65	50	15	160M/L	5A	100	236	524	598	180	200	175	160	255	860	100	70	350	20	265	212	314	254	53	60	14	15	1/4B	144	163	20	20	15	100	177
GSD2 50-200	65	50	18.5	160M/L	5A	100	236	524	598	180	200	175	160	255	860	100	70	350	20	265	212	314	254	53	60	14	15	1/4B	144	163	20	20	15	100	185
GSD2 65-125	80	65	11	160M/L	5A	100	236	524	598	180	180	175	160	255	860	125	95	350	20	282	212	314	254	70	60	14	15	1/4B	140	160	20	20	15	100	169
GSD2 65-160	80	65	11	160M/L	5A	100	236	524	598	180	200	175	160	255	860	125	95	350	20	282	212	314	254	70	60	14	15	1/4B	146	174	20	20	15	100	172
GSD2 65-160	80	65	15	160M/L	5A	100	236	524	598	180	200	175	160	255	860	125	95	350	20	282	212	314	254	70	60	14	15	1/4B	146	174	20	20	15	100	175
GSD2 65-160	80	65	18.5	160M/L	5A	100	236	524	598	180	200	175	160	255	860	125	95	350	20	282	212	314	254	70	60	14	15	1/4B	146	174	20	20	15	100	183

Dimensions without baseplate - Type 5B

Type 5B - Pump spacers (cast iron, painted) & Motor spacers (steel bar, painted)

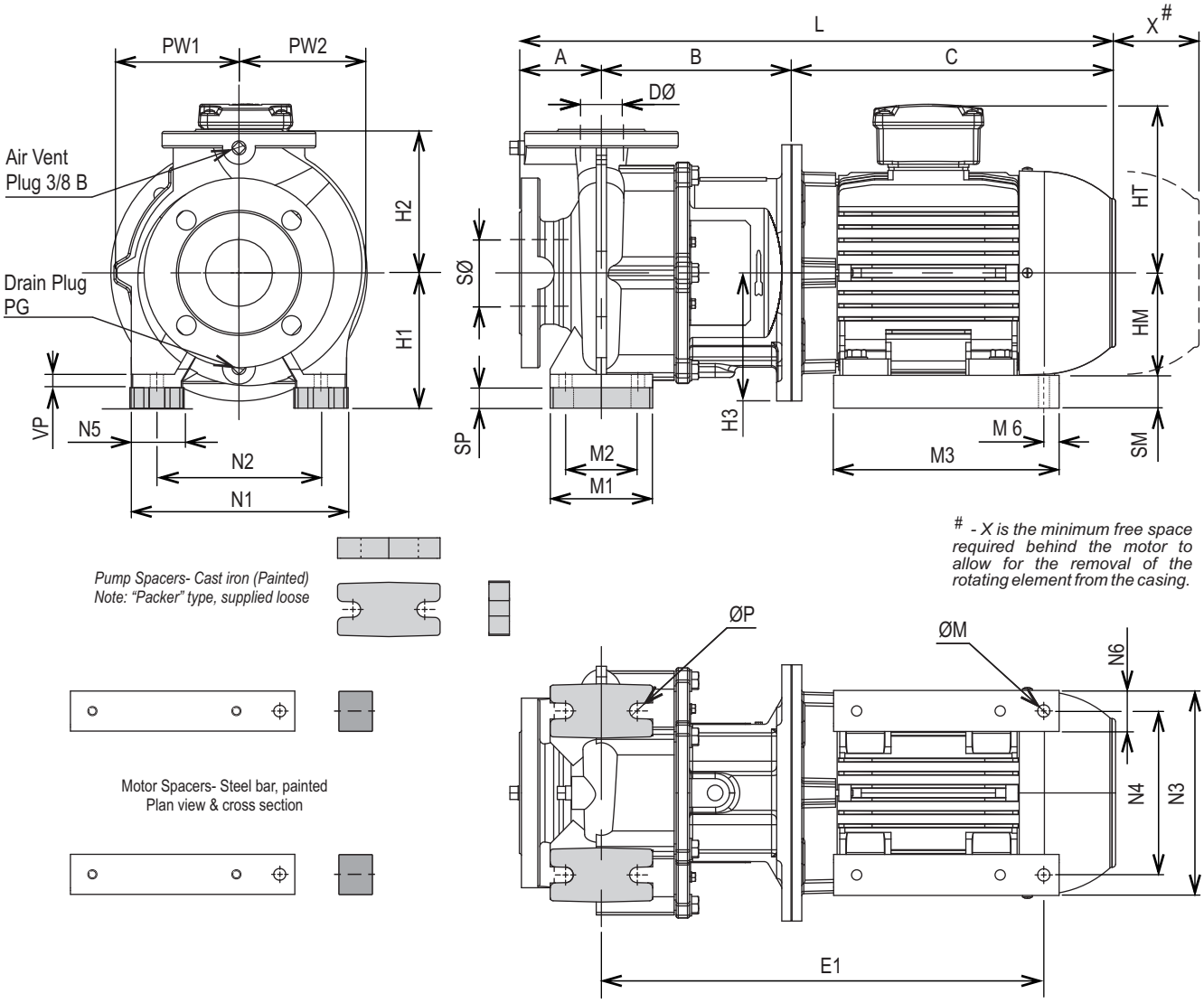

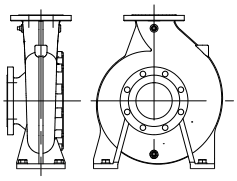

Refer to pages 436 & 437 for more detailed pump end dimensions.

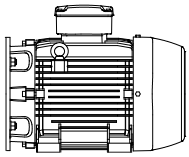

Refer to pages 438 & 439 for more detailed motor dimensions.

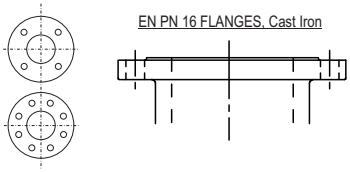

Refer to page 401 for flange dimensions.

Ebara End Suction Motor Pumps (to EN733)

Model **GSD**

Dimensions without baseplate - Type 5B

2 Pole Models	SØ	DØ	Power kW	Motor Fr W21 IE3	Type	Dimensions in mm (refers to drawing on page 422)																												Weight kg
						A	B	C	E1	H1	H2	H3	HM	HT	L	M1	M2	M3	M6	N1	N2	N3	N4	N5	N6	ØM	ØP	PG	PW1	PW2	SM	SP	VP	X	
GSD2 40-250	65	40	30	200M/L	5B	100	236	648	674	225	225	200	200	300	984	125	95	450	45	320	250	393	318	70	75	18	15	1/4B	164	176	25	45	15	100	297
GSD2 40-315	65	40	45	225S/M2P	5B	125	261	707	721	250	250	225	225	373	1093	125	95	480	40	350	280	431	356	70	75	18	15	1/4B	201	211	25	25	15	100	516
GSD2 40-315	65	40	55	250S/M2P	5B	125	291	783	808	280	250	275	250	373	1199	125	95	530	41	350	280	506	406	70	100	24	15	1/4B	201	211	30	55	15	100	592
GSD2 50-200	65	50	30	200M/L	5B	100	236	648	674	225	200	200	200	300	984	100	70	450	45	265	212	393	318	53	75	18	15	1/4B	144	163	25	65	15	100	291
GSD2 50-250	65	50	30	200M/L	5B	100	236	648	674	225	225	200	200	300	984	125	95	450	45	320	250	393	318	70	75	18	15	1/4B	166	180	25	45	15	100	298
GSD2 50-250	65	50	37	200M/L	5B	100	236	648	674	225	225	200	200	300	984	125	95	450	45	320	250	393	318	70	75	18	15	1/4B	166	180	25	45	15	100	310
GSD2 50-250	65	50	45	225S/M2P	5B	100	236	707	696	250	225	225	225	373	1043	125	95	480	40	320	250	431	356	70	75	18	15	1/4B	166	180	25	70	15	100	496
GSD2 50-315	65	50	45	225S/M2P	5B	125	261	707	721	250	280	225	225	373	1093	125	95	480	40	350	280	431	356	70	75	18	15	1/4B	205	220	25	25	15	100	520
GSD2 50-315	65	50	55	250S/M2P	5B	125	291	783	808	280	280	275	250	373	1199	125	95	530	41	350	280	506	406	70	100	24	15	1/4B	205	220	30	55	15	100	597
GSD2 50-315	65	50	75	250S/M2P	5B	125	291	783	808	280	280	275	250	373	1199	125	95	530	41	350	280	506	406	70	100	24	15	1/4B	205	220	30	55	15	100	627
GSD2 65-200	80	65	30	200M/L	5B	100	236	648	674	225	225	200	200	300	984	125	95	450	45	320	250	393	318	70	75	18	15	1/4B	160	177	25	45	15	140	294
GSD2 65-200	80	65	37	200M/L	5B	100	236	648	674	225	225	200	200	300	984	125	95	450	45	320	250	393	318	70	75	18	15	1/4B	160	177	25	45	15	140	306
GSD2 65-250	80	65	30	200M/L	5B	100	261	648	699	225	250	200	200	300	1009	160	120	450	45	365	280	393	318	85	75	18	19	1/4B	182	207	25	25	19	140	313
GSD2 65-250	80	65	37	200M/L	5B	100	261	648	699	225	250	200	200	300	1009	160	120	450	45	365	280	393	318	85	75	18	19	1/4B	182	207	25	25	19	140	325
GSD2 65-250	80	65	45	225S/M2P	5B	100	261	707	721	250	250	225	225	373	1068	160	120	480	40	365	280	431	356	85	75	18	19	1/4B	182	207	25	50	19	140	512
GSD2 65-250	80	65	55	250S/M2P	5B	100	291	783	808	280	250	275	250	373	1174	160	120	530	41	365	280	506	406	85	100	24	19	1/4B	182	207	30	80	19	140	591
GSD2 65-250	80	65	75	250S/M2P	5B	100	291	783	808	280	250	275	250	373	1174	160	120	530	41	365	280	506	406	85	100	24	19	1/4B	182	207	30	80	19	140	621
GSD2 65-315	80	65	75	250S/M2P	5B	125	291	783	808	280	280	275	250	373	1199	160	120	530	41	400	315	506	406	85	100	24	19	1/4B	205	223	30	55	19	140	631
GSD2 80-160	100	80	30	200M/L	5B	125	236	648	674	225	225	200	200	300	1009	125	95	450	45	320	250	393	318	70	75	18	15	1/4B	160	194	25	45	15	140	298
GSD2 80-200	100	80	30	200M/L	5B	125	261	648	699	225	250	200	200	300	1034	125	95	450	45	350	280	393	318	70	75	18	15	1/4B	173	196	25	45	15	140	306
GSD2 80-200	100	80	37	200M/L	5B	125	261	648	699	225	250	200	200	300	1034	125	95	450	45	350	280	393	318	70	75	18	15	1/4B	173	196	25	45	15	140	318
GSD2 80-200	100	80	45	225S/M2P	5B	125	261	707	721	250	250	225	225	373	1093	125	95	480	40	350	280	431	356	70	75	18	15	1/4B	173	196	25	70	15	140	503
GSD2 80-200	100	80	55	250S/M2P	5B	125	291	783	808	280	250	275	250	373	1199	125	95	530	41	350	280	506	406	70	100	24	15	1/4B	173	196	30	100	15	140	580
GSD2 80-200	100	80	75	250S/M2P	5B	125	291	783	808	280	250	275	250	373	1199	125	95	530	41	350	280	506	406	70	100	24	15	1/4B	173	196	30	100	15	140	610
GSD2 80-250	100	80	55	250S/M2P	5B	125	291	783	808	280	280	275	250	373	1199	160	120	530	41	400	315	506	406	85	100	24	19	1/4B	200	216	30	80	19	140	597
GSD2 80-250	100	80	75	250S/M2P	5B	125	291	783	808	280	280	275	250	373	1199	160	120	530	41	400	315	506	406	85	100	24	19	1/4B	200	216	30	80	19	140	627
GSD2 100-160	125	100	30	200M/L	5B	125	261	648	699	225	250	200	200	300	1034	160	120	450	45	365	280	393	318	85	75	18	19	3/8B	180	190	25	25	16	140	305
GSD2 100-160	125	100	37	200M/L	5B	125	261	648	699	225	250	200	200	300	1034	160	120	450	45	365	280	393	318	85	75	18	19	3/8B	180	190	25	25	16	140	317
GSD2 100-200	125	100	30	200M/L	5B	125	261	648	699	225	280	200	200	300	1034	160	120	450	45	365	280	393	318	85	75	18	19	3/8B	182	220	25	25	16	140	322
GSD2 100-200	125	100	37	200M/L	5B	125	261	648	699	225	280	200	200	300	1034	160	120	450	45	365	280	393	318	85	75	18	19	3/8B	182	220	25	25	16	140	334
GSD2 100-200	125	100	45	225S/M2P	5B	125	261	707	721	250	280	225	225	373	1093	160	120	480	40	365	280	431	356	85	75	18	19	3/8B	182	220	25	50	16	140	521
GSD2 100-200	125	100	55	250S/M2P	5B	125	291	783	808	280	280	275	250	373	1199	160	120	530	41	365	280	506	406	85	100	24	19	3/8B	182	220	30	80	16	140	600
GSD2 100-200	125	100	75	250S/M2P	5B	125	291	783	808	280	280	275	250	373	1199	160	120	530	41	365	280	506	406	85	100	24	19	3/8B	182	220	30	80	16	140	630
GSD2 100-250	125	100	55	250S/M2P	5B	140	291	783	808	280	280	275	250	373	1214	160	120	530	41	400	315	506	406	85	100	24	19	3/8B	200	215	30	55	16	140	598
GSD2 100-250	125	100	75	250S/M2P	5B	140	291	783	808	280	280	275	250	373	1214	160	120	530	41	400	315	506	406	85	100	24	19	3/8B	200	215	30	55	16	140	628
GSD2 125-200	150	125	55	250S/M2P	5B	140	291	783	808	280	315	275	250	373	1214	160	120	530	41	400	315	506	406	85	100	24	19	3/8B	200	247	30	30	19	140	606
GSD2 125-200	150	125	75	250S/M2P	5B	140	291	783	808	280	315	275	250	373	1214	160	120	530	41	400	315	506	406	85	100	24	19	3/8B	200	247	30	30	19	140	636

Dimensions without baseplate - Type 6A

Type 6A - Motor spacer (folded steel, painted)

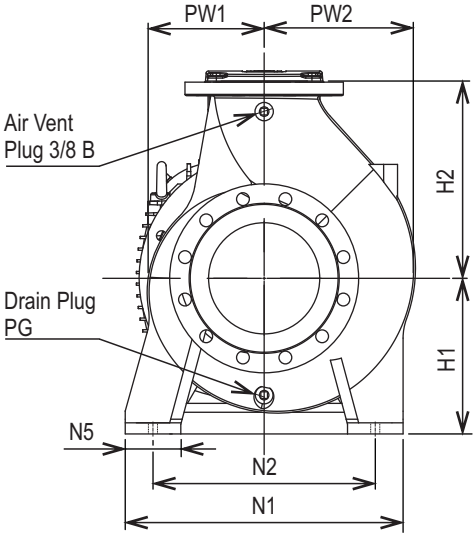

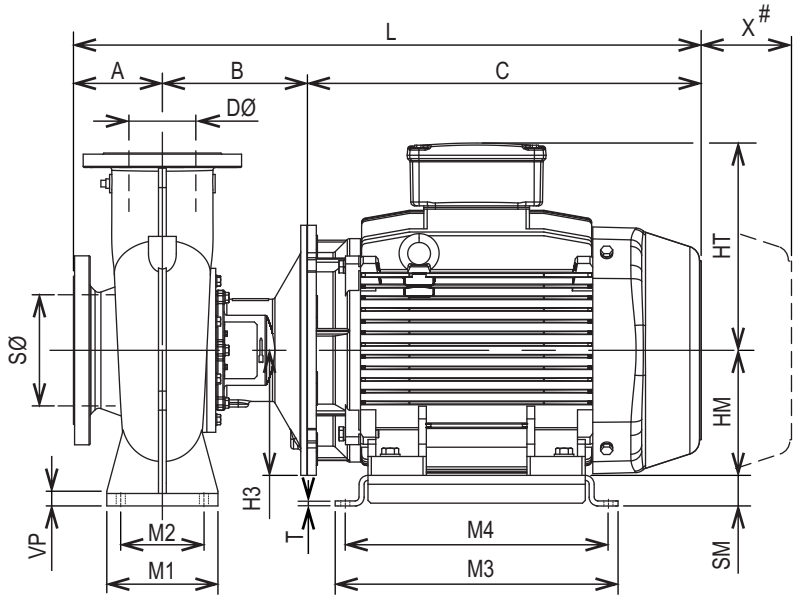

- X is the minimum free space required behind the motor to allow for the removal of the rotating element from the casing.

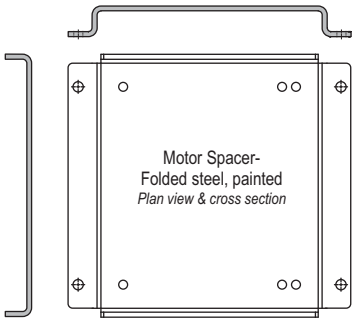

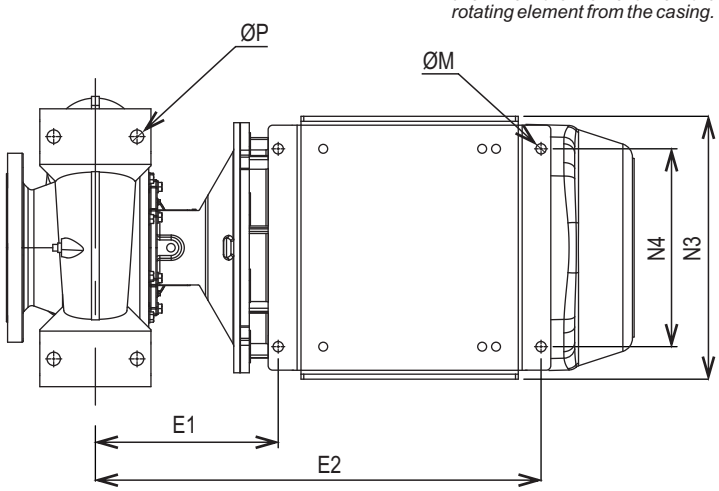

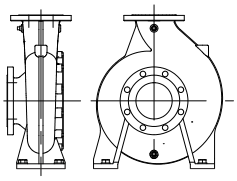

Refer to pages 436 & 437
for more detailed
pump end dimensions.

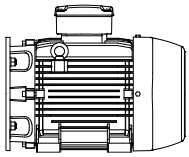

Refer to pages 438 & 439
for more detailed
motor dimensions.

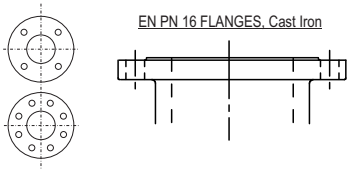

Refer to page 401
for flange dimensions.

Ebara End Suction Motor Pumps (to EN733)

Model **GSD**

Dimensions without baseplate - Type 6A

2 Pole Models	SØ	DØ	Power kW	Motor Fr W21 IE3	Type	Dimensions in mm (refers to drawing on page 424)																													Weight kg
						A	B	C	E1	E2	H1	H2	H3	HM	HT	L	M1	M2	M3	M4	N1	N2	N3	N4	N5	ØM	ØP	PG	PW1	PW2	SM	T	VP	X	
GSD2 100-160	125	100	15	160M/L	6A	125	261	524	369	623	200	250	175	160	255	910	160	120	430	254	360	280	359	254	80	15	19	3/8B	180	190	40	8	16	140	197
GSD2 100-160	125	100	18.5	160M/L	6A	125	261	524	369	623	200	250	175	160	255	910	160	120	430	254	360	280	359	254	80	15	19	3/8B	180	190	40	8	16	140	205
GSD2 150-200	200	150	37	200M/L	6A	160	261	648	394	699	280	355	200	200	300	1069	200	150	488	305	500	400	434	318	100	18.5	24	3/8B	250	273	80	9	20	140	396
GSD2 150-200	200	150	45	225S/M2P	6A	160	261	707	410	721	280	355	225	225	373	1128	200	150	509	311	500	400	473	356	100	18.5	24	3/8B	250	273	55	9	20	140	577

4 Pole Models	SØ	DØ	Power kW	Motor Fr W21 IE3	Type	Dimensions in mm (refers to drawing on page 424)																													Weight kg
						A	B	C	E1	E2	H1	H2	H3	HM	HT	L	M1	M2	M3	M4	N1	N2	N3	N4	N5	ØM	ØP	PG	PW1	PW2	SM	T	VP	X	
GSD4 50-315	65	50	11	160M/L	6A	125	261	524	369	623	225	280	175	160	255	910	125	95	430	254	345	280	359	254	65	15	15	1/4B	205	220	65	8	15	100	213
GSD4 65-315	80	65	11	160M/L	6A	125	261	524	369	623	225	280	175	160	255	910	160	120	430	254	400	315	359	254	80	15	19	1/4B	205	223	65	8	19	140	214
GSD4 65-315	80	65	15	160M/L	6A	125	261	524	369	623	225	280	175	160	255	910	160	120	430	254	400	315	359	254	80	15	19	1/4B	205	223	65	8	19	140	223
GSD4 80-250	100	80	11	160M/L	6A	125	261	524	369	623	200	280	175	160	255	910	160	120	430	254	400	315	359	254	80	15	19	1/4B	200	216	40	8	19	140	203
GSD4 80-250	100	80	15	160M/L	6A	125	261	524	369	623	200	280	175	160	255	910	160	120	430	254	400	315	359	254	80	15	19	1/4B	200	216	40	8	19	140	212
GSD4 80-315	100	80	11	160M/L	6A	125	261	524	369	623	250	315	175	160	255	910	160	120	430	254	400	315	359	254	80	15	19	1/4B	217	247	90	8	19	140	236
GSD4 80-315	100	80	15	160M/L	6A	125	261	524	369	623	250	315	175	160	255	910	160	120	430	254	400	315	359	254	80	15	19	1/4B	217	247	90	8	19	140	245
GSD4 80-315	100	80	18.5	180M/L	6A	125	261	584	382	661	250	315	175	180	274	970	160	120	456	279	400	315	384	279	80	15	19	1/4B	217	247	70	8	19	140	296
GSD4 80-315	100	80	22	180M/L	6A	125	261	584	382	661	250	315	175	180	274	970	160	120	456	279	400	315	384	279	80	15	19	1/4B	217	247	70	8	19	140	309
GSD4 80-400	100	80	22	180M/L	6A	125	286	584	407	686	280	355	175	180	274	995	160	120	456	279	435	355	384	279	80	15	19	1/4B	268	296	100	8	19	140	373
GSD4 80-400	100	80	30	200M/L	6A	125	286	648	419	724	280	355	200	200	300	1059	160	120	488	305	435	355	434	318	80	18.5	19	1/4B	268	296	80	9	19	140	431
GSD4 80-400	100	80	37	225S/M4P	6A	125	316	707	465	776	280	355	225	225	373	1148	160	120	509	311	435	355	473	356	80	18.5	19	1/4B	268	296	55	9	19	140	582
GSD4 80-400	100	80	45	225S/M4P	6A	125	316	707	465	776	280	355	225	225	373	1148	160	120	509	311	435	355	473	356	80	18.5	19	1/4B	268	296	55	9	19	140	602
GSD4 100-200	125	100	11	160M/L	6A	125	261	524	369	623	200	280	175	160	255	910	160	120	430	254	360	280	359	254	80	15	19	3/8B	182	220	40	8	16	140	206
GSD4 100-250	125	100	11	160M/L	6A	140	261	524	369	623	225	280	175	160	255	925	160	120	430	254	400	315	359	254	80	15	19	3/8B	200	215	65	8	16	140	210
GSD4 100-250	125	100	15	160M/L	6A	140	261	524	369	623	225	280	175	160	255	925	160	120	430	254	400	315	359	254	80	15	19	3/8B	200	215	65	8	16	140	219
GSD4 100-250	125	100	18.5	180M/L	6A	140	261	584	382	661	225	280	175	180	274	985	160	120	456	279	400	315	384	279	80	15	19	3/8B	200	215	45	8	16	140	271
GSD4 100-315	125	100	11	160M/L	6A	140	261	524	369	623	250	315	175	160	255	925	160	120	430	254	400	315	359	254	80	15	19	3/8B	200	227	90	8	16	140	237
GSD4 100-315	125	100	15	160M/L	6A	140	261	524	369	623	250	315	175	160	255	925	160	120	430	254	400	315	359	254	80	15	19	3/8B	200	227	90	8	16	140	246
GSD4 100-315	125	100	18.5	180M/L	6A	140	261	584	382	661	250	315	175	180	274	985	160	120	456	279	400	315	384	279	80	15	19	3/8B	200	227	70	8	16	140	298
GSD4 100-315	125	100	22	180M/L	6A	140	261	584	382	661	250	315	175	180	274	985	160	120	456	279	400	315	384	279	80	15	19	3/8B	200	227	70	8	16	140	311
GSD4 100-315	125	100	30	200M/L	6A	140	261	648	394	699	250	315	200	200	300	1049	160	120	488	305	400	315	434	318	80	18.5	19	3/8B	200	227	50	9	16	140	368
GSD4 100-400	125	100	18.5	180M/L	6A	140	286	584	407	686	280	355	175	180	274	1010	200	150	456	279	500	400	384	279	100	15	24	3/8B	264	291	100	8	20	140	376
GSD4 100-400	125	100	22	180M/L	6A	140	286	584	407	686	280	355	175	180	274	1010	200	150	456	279	500	400	384	279	100	15	24	3/8B	264	291	100	8	20	140	389
GSD4 100-400	125	100	30	200M/L	6A	140	286	648	419	724	280	355	200	200	300	1074	200	150	488	305	500	400	434	318	100	18.5	24	3/8B	264	291	80	9	20	140	449
GSD4 100-400	125	100	37	225S/M4P	6A	140	316	707	465	776	280	355	225	225	373	1163	200	150	509	311	500	400	473	356	100	18.5	24	3/8B	264	291	55	9	20	140	601
GSD4 100-400	125	100	45	225S/M4P	6A	140	316	707	465	776	280	355	225	225	373	1163	200	150	509	311	500	400	473	356	100	18.5	24	3/8B	264	291	55	9	20	140	621

Ebara End Suction Motor Pumps (to EN733) Model GSD

Dimensions without baseplate - Type 6A

4 Pole Models	SØ	DØ	Power kW	Motor Fr W21 IE3	Type	Dimensions in mm (refers to drawing on page 424)																												Weight kg
						A	B	C	E1	E2	H1	H2	H3	HM	HT	L	M1	M2	M3	M4	N1	N2	N3	N4	N5	ØM	ØP	PG	PW1	PW2	SM	T	VP	X	
GSD4 125-200	150	125	11	160M/L	6A	140	261	524	369	623	250	315	175	160	255	925	160	120	430	254	400	315	359	254	80	15	19	3/8B	200	247	90	8	16	140	225
GSD4 125-200	150	125	15	160M/L	6A	140	261	524	369	623	250	315	175	160	255	925	160	120	430	254	400	315	359	254	80	15	19	3/8B	200	247	90	8	16	140	234
GSD4 125-250	150	125	11	160M/L	6A	140	261	524	369	623	250	355	175	160	255	925	160	120	430	254	400	315	359	254	80	15	19	3/8B	215	268	90	8	16	140	243
GSD4 125-250	150	125	15	160M/L	6A	140	261	524	369	623	250	355	175	160	255	925	160	120	430	254	400	315	359	254	80	15	19	3/8B	215	268	90	8	16	140	252
GSD4 125-250	150	125	18.5	180M/L	6A	140	261	584	382	661	250	355	175	180	274	985	160	120	456	279	400	315	384	279	80	15	19	3/8B	215	268	70	8	16	140	303
GSD4 125-250	150	125	22	180M/L	6A	140	261	584	382	661	250	355	175	180	274	985	160	120	456	279	400	315	384	279	80	15	19	3/8B	215	268	70	8	16	140	316
GSD4 125-250	150	125	30	200M/L	6A	140	261	648	394	699	250	355	200	200	300	1049	160	120	488	305	400	315	434	318	80	18.5	19	3/8B	215	268	50	9	16	140	374
GSD4 125-315	150	125	18.5	180M/L	6A	140	286	584	407	686	280	355	175	180	274	1010	200	150	456	279	500	400	384	279	100	15	24	3/8B	250	282	100	8	20	140	339
GSD4 125-315	150	125	22	180M/L	6A	140	286	584	407	686	280	355	175	180	274	1010	200	150	456	279	500	400	384	279	100	15	24	3/8B	250	282	100	8	20	140	352
GSD4 125-315	150	125	30	200M/L	6A	140	286	648	419	724	280	355	200	200	300	1074	200	150	488	305	500	400	434	318	100	18.5	24	3/8B	250	282	80	9	20	140	413
GSD4 125-315	150	125	37	225S/M4P	6A	140	316	707	465	776	280	355	225	225	373	1163	200	150	509	311	500	400	473	356	100	18.5	24	3/8B	250	282	55	9	20	140	564
GSD4 125-400	150	125	30	200M/L	6A	140	286	648	419	724	315	400	200	200	300	1074	200	150	488	305	500	400	434	318	100	18.5	24	3/8B	274	312	115	9	20	140	460
GSD4 125-400	150	125	37	225S/M4P	6A	140	316	707	465	776	315	400	225	225	373	1163	200	150	509	311	500	400	473	356	100	18.5	24	3/8B	274	312	90	9	20	140	614
GSD4 125-400	150	125	45	225S/M4P	6A	140	316	707	465	776	315	400	225	225	373	1163	200	150	509	311	500	400	473	356	100	18.5	24	3/8B	274	312	90	9	20	140	634
GSD4 125-400	150	125	55	250S/M4P	6A	140	316	783	484	833	315	400	275	250	373	1239	200	150	615	349	500	400	541	406	100	24	24	3/8B	274	312	65	9	20	140	714
GSD4 125-400	150	125	75	L250S/M	6A	140	316	833	484	833	315	400	275	250	378	1289	200	150	615	349	500	400	541	406	100	24	24	3/8B	274	312	65	9	20	140	817
GSD4 150-200	200	150	11	160M/L	6A	160	261	524	369	623	280	355	175	160	255	945	200	150	430	254	500	400	359	254	100	15	24	3/8B	250	273	120	8	20	140	265
GSD4 150-250	200	150	18.5	180M/L	6A	160	286	584	407	686	280	375	175	180	274	1030	200	150	456	279	500	400	384	279	100	15	24	3/8B	250	300	100	8	20	140	361
GSD4 150-250	200	150	22	180M/L	6A	160	286	584	407	686	280	375	175	180	274	1030	200	150	456	279	500	400	384	279	100	15	24	3/8B	250	300	100	8	20	140	374
GSD4 150-250	200	150	30	200M/L	6A	160	286	648	419	724	280	375	200	200	300	1094	200	150	488	305	500	400	434	318	100	18.5	24	3/8B	250	300	80	9	20	140	434
GSD4 150-250	200	150	37	225S/M4P	6A	160	316	707	465	776	280	375	225	225	373	1183	200	150	509	311	500	400	473	356	100	18.5	24	3/8B	250	300	55	9	20	140	586
GSD4 150-250	200	150	45	225S/M4P	6A	160	316	707	465	776	280	375	225	225	373	1183	200	150	509	311	500	400	473	356	100	18.5	24	3/8B	250	300	55	9	20	140	606
GSD4 150-315	200	150	22	180M/L	6A	160	286	584	407	686	315	400	175	180	274	1030	200	150	456	279	550	450	384	279	100	15	24	3/8B	275	319	135	8	20	140	390
GSD4 150-315	200	150	30	200M/L	6A	160	286	648	419	724	315	400	200	200	300	1094	200	150	488	305	550	450	434	318	100	18.5	24	3/8B	275	319	115	9	20	140	451
GSD4 150-315	200	150	37	225S/M4P	6A	160	316	707	465	776	315	400	225	225	373	1183	200	150	509	311	550	450	473	356	100	18.5	24	3/8B	275	319	90	9	20	140	604
GSD4 150-315	200	150	45	225S/M4P	6A	160	316	707	465	776	315	400	225	225	373	1183	200	150	509	311	550	450	473	356	100	18.5	24	3/8B	275	319	90	9	20	140	624
GSD4 150-315	200	150	55	250S/M4P	6A	160	316	783	484	833	315	400	275	250	373	1259	200	150	615	349	550	450	541	406	100	24	24	3/8B	275	319	65	9	20	140	704
GSD4 150-315	200	150	75	L250S/M	6A	160	316	833	484	833	315	400	275	250	378	1309	200	150	615	349	550	450	541	406	100	24	24	3/8B	275	319	65	9	20	140	807
GSD4 150-400	200	150	37	225S/M4P	6A	160	316	707	465	776	315	450	225	225	373	1183	200	150	509	311	550	450	473	356	100	18.5	24	1/2B	277	393	90	9	20	140	663
GSD4 150-400	200	150	45	225S/M4P	6A	160	316	707	465	776	315	450	225	225	373	1183	200	150	509	311	550	450	473	356	100	18.5	24	1/2B	277	393	90	9	20	140	683
GSD4 150-400	200	150	55	250S/M4P	6A	160	316	783	484	833	315	450	275	250	373	1259	200	150	615	349	550	450	541	406	100	24	24	1/2B	277	393	65	9	20	140	763
GSD4 150-400	200	150	75	L250S/M	6A	160	316	833	484	833	315	450	275	250	378	1309	200	150	615	349	550	450	541	406	100	24	24	1/2B	277	393	65	9	20	140	866

* Note. For 150-315 Dimension H1 not to EN standard. Refer to page 437 for details.

Dimensions without baseplate - Type 6B

Type 6B - Motor spacer (folded steel, zinc plated)

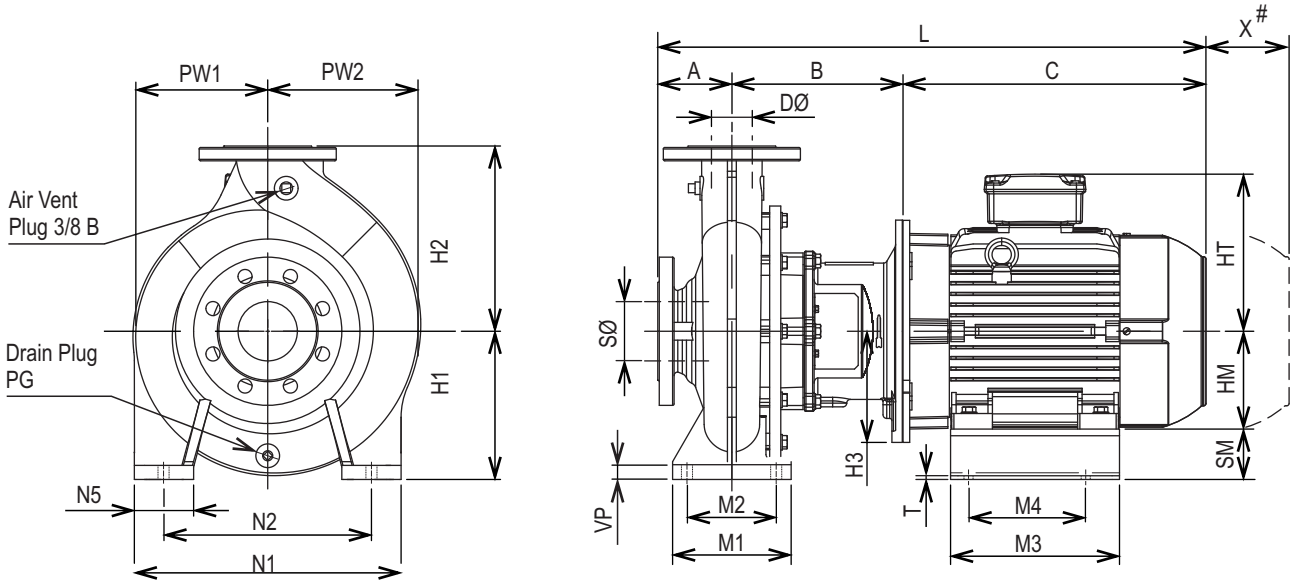

- X is the minimum free space required behind the motor to allow for the removal of the rotating element from the casing.

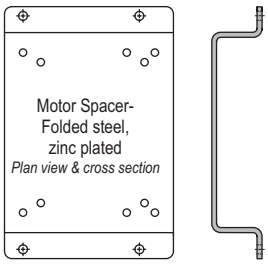

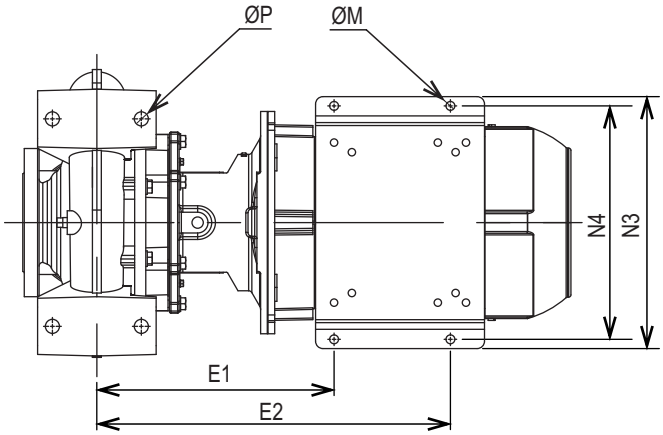

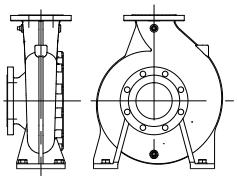

Refer to pages 436 & 437
for more detailed
pump end dimensions.

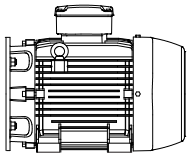

Refer to pages 438 & 439
for more detailed
motor dimensions.

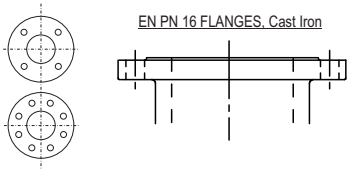

Refer to page 401
for flange dimensions.

Dimensions without baseplate - Type 6B

4 Pole Models	SØ	DØ	Power kW	Motor Fr W21 IE3	Type	Dimensions in mm (refers to drawing on page 427)																												Weight kg
						A	B	C	E1	E2	H1	H2	H3	HM	HT	L	M1	M2	M3	M4	N1	N2	N3	N4	N5	ØM	ØP	PG	PW1	PW2	SM	T	VP	X	
GSD4 40-250	65	40	4	112M	6B	100	186	333	256	396	180	225	125	112	185	619	125	95	228	140	320	250	340	190	65	12	15	1/4B	164	176	68	5	15	100	92
GSD4 40-315	65	40	5.5	132S	6B	125	231	410	320	460	225	250	150	132	205	766	125	95	244	140	345	280	340	216	65	12	15	1/4B	201	211	93	5	15	100	137
GSD4 40-315	65	40	7.5	132M	6B	125	231	410	320	498	225	250	150	132	205	766	125	95	244	178	345	280	340	216	65	12	15	1/4B	201	211	93	5	15	100	145
GSD4 50-250	65	50	4	112M	6B	100	186	333	256	396	180	225	125	112	185	619	125	95	228	140	320	250	340	190	65	12	15	1/4B	166	180	68	5	15	100	93
GSD4 50-315	65	50	5.5	132S	6B	125	231	410	320	460	225	280	150	132	205	766	125	95	244	140	345	280	340	216	65	12	15	1/4B	205	220	93	5	15	100	141
GSD4 50-315	65	50	7.5	132M	6B	125	231	410	320	498	225	280	150	132	205	766	125	95	244	178	345	280	340	216	65	12	15	1/4B	205	220	93	5	15	100	149
GSD4 65-200	80	65	4	112M	6B	100	186	333	256	396	180	225	125	112	185	619	125	95	228	140	320	250	340	190	65	12	15	1/4B	160	177	68	5	15	140	89
GSD4 65-250	80	65	4	112M	6B	100	211	333	281	421	200	250	125	112	185	644	160	120	182	140	360	280	290	190	80	12	19	1/4B	182	207	88	5	19	140	108
GSD4 65-250	80	65	5.5	132S	6B	100	231	410	320	460	200	250	150	132	205	741	160	120	228	140	360	280	340	216	80	12	19	1/4B	182	207	68	5	19	140	117
GSD4 65-250	80	65	7.5	132M	6B	100	231	410	320	498	200	250	150	132	205	741	160	120	228	178	360	280	340	216	80	12	19	1/4B	182	207	68	5	19	140	134
GSD4 80-160	100	80	4	112M	6B	125	186	333	256	396	180	225	125	112	185	644	125	95	228	140	320	250	340	190	65	12	15	1/4B	160	194	68	5	15	140	93
GSD4 80-200	100	80	4	112M	6B	125	211	333	281	421	180	250	125	112	185	669	125	95	228	140	345	280	340	190	65	12	15	1/4B	173	196	68	5	15	140	101
GSD4 80-250	100	80	7.5	132M	6B	125	231	410	320	498	200	280	150	132	205	766	160	120	228	178	400	315	340	216	80	12	19	1/4B	200	216	68	5	19	140	141
GSD4 100-160	125	100	4	112M	6B	125	211	333	281	421	200	250	125	112	185	669	160	120	182	140	360	280	290	190	80	12	19	3/8B	180	190	88	5	16	140	101
GSD4 100-200	125	100	4	112M	6B	125	211	333	281	421	200	280	125	112	185	669	160	120	182	140	360	280	290	190	80	12	19	3/8B	182	220	88	5	16	140	118
GSD4 100-200	125	100	5.5	132S	6B	125	231	410	320	460	200	280	150	132	205	766	160	120	228	140	360	280	340	216	80	12	19	3/8B	182	220	68	5	16	140	136
GSD4 100-200	125	100	7.5	132M	6B	125	231	410	320	498	200	280	150	132	205	766	160	120	228	178	360	280	340	216	80	12	19	3/8B	182	220	68	5	16	140	144
GSD4 100-250	125	100	7.5	132M	6B	140	231	410	320	498	225	280	150	132	205	781	160	120	244	178	400	315	340	216	80	12	19	3/8B	200	215	93	5	16	140	147
GSD4 125-200	150	125	5.5	132S	6B	140	231	410	320	460	250	315	150	132	205	781	160	120	244	140	400	315	340	216	80	12	19	3/8B	200	247	118	5	16	140	152
GSD4 125-200	150	125	7.5	132M	6B	140	231	410	320	498	250	315	150	132	205	781	160	120	244	178	400	315	340	216	80	12	19	3/8B	200	247	118	5	16	140	160
GSD4 150-200	200	150	5.5	132S	6B	160	231	410	320	460	280	355	150	132	205	801	200	150	244	140	500	400	340	216	100	12	24	3/8B	250	273	148	5	20	140	190
GSD4 150-200	200	150	7.5	132M	6B	160	231	410	320	498	280	355	150	132	205	801	200	150	244	178	500	400	340	216	100	12	24	3/8B	250	273	148	5	20	140	198

Dimensions motor pump only - no spacers *(for reference only)*

Typical arrangement only { *The relative position of pump feet, motor feet and motor flange to each other varies depending on the pump/motor combination. Refer to page 301 for more details.*

 # - X is the minimum free space required behind the motor to allow for the removal of the rotating element from the casing.

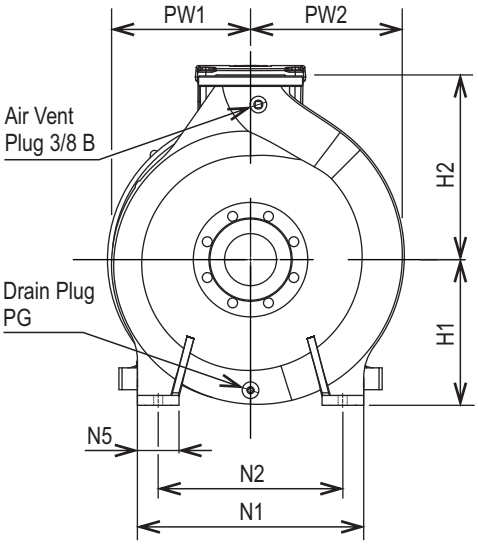

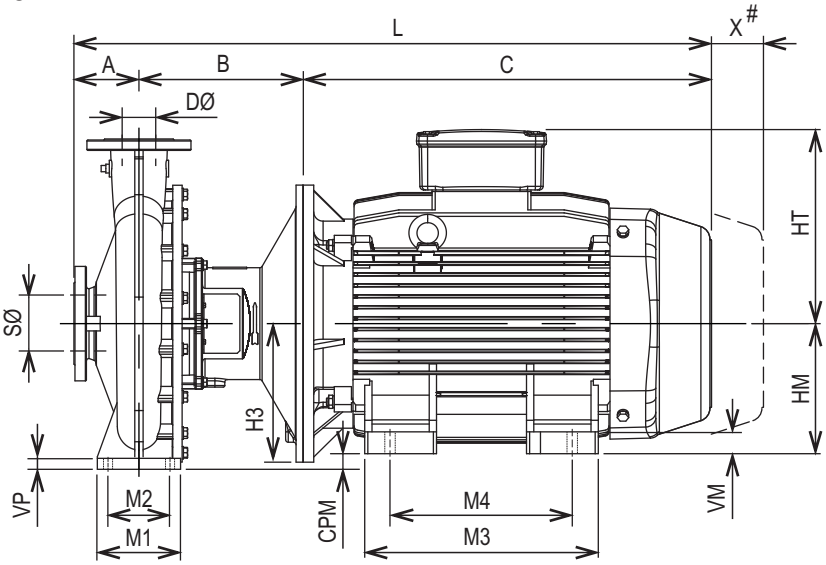

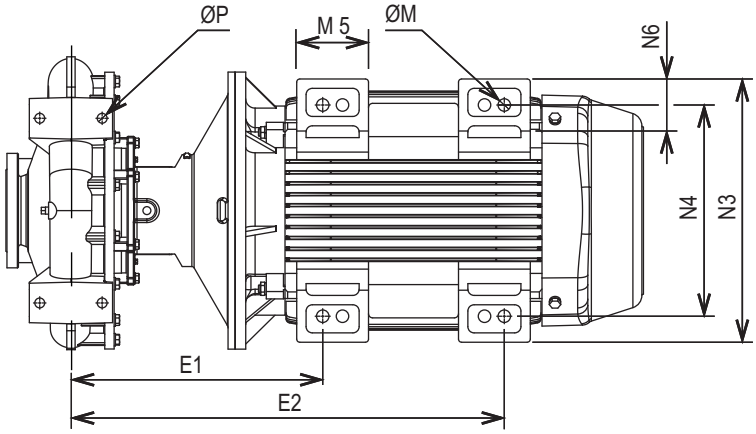

100L 112M 132S 132M

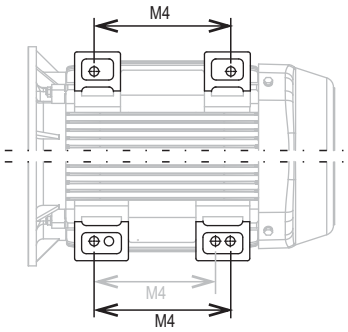

90S/L 160M/L 180M/L 200M/L
225S/M 280S/M 250S/M

Note: WEG W21 IE3 motors include "multi" frame motors (i.e S/M;S/L;M/L) which have multiple holes as shown. The longer frame spacing is shown in the dimension tables.

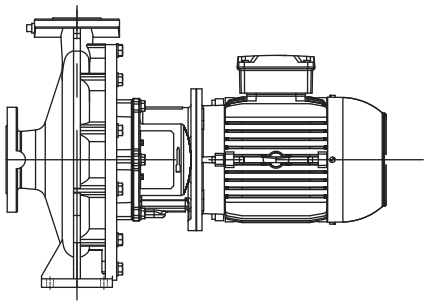

Note: Dimensions referring to motor feet not relevant for type 1A configuration with B5 motors.

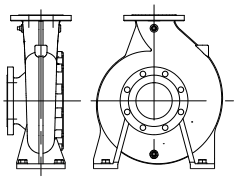

Refer to pages 436 & 437 for more detailed pump end dimensions.

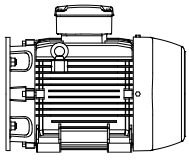

Refer to pages 438 & 439 for more detailed motor dimensions.

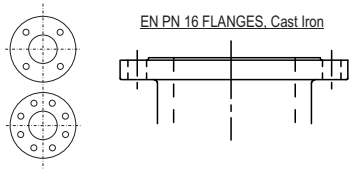

Refer to page 401 for flange dimensions.

Ebara End Suction Motor Pumps (to EN733)

Model **GSD**

Dimensions motor pump only - no spacers *(for reference only)*

2 Pole Models	SØ	DØ	Power kW	Motor Fr W21 IE3	Type	Dimensions in mm *(refers to drawing on page 429)* A	B	C	CPM	E1	E2	H1	H2	H3	HM	HT	L	M1	M2	M3	M4	M5	N1	N2	N3	N4	N5	N6	PG	PW1	PW2	ØP	ØM	VM	VP	X	Approx. Weight kg
GSD2 32-125	50	32	1.5	90S/L	1A	80	176	279	N/A	N/A	N/A	112	140	100	90	155	535	100	70	N/A	N/A	42	190	140	170	140	50	35	1/4B	103	115	15	N/A	9	10	100	47
			2.2	90S/L	1A	80	176	279	N/A	N/A	N/A	112	140	100	90	155	535	100	70	N/A	N/A	42	190	140	170	140	50	35	1/4B	103	115	15	N/A	9	10	100	49
			3	100L	5A	80	186	316	12	249	389	112	140	125	100	165	582	100	70	170	140	50	190	140	196	160	50	40	1/4B	103	115	15	12	12	10	100	60
GSD2 32-160	50	32	3	100L	3A	80	186	316	32	249	389	132	160	125	100	165	582	100	70	170	140	50	240	190	196	160	50	40	1/4B	120	130	15	12	12	15	100	61
			4	112M	3A	80	186	333	20	256	396	132	160	125	112	185	599	100	70	170	140	50	240	190	220	190	50	46	1/4B	120	130	15	12	12	15	100	68
			5.5	132S	5A	80	206	410	0	295	435	132	160	150	132	205	696	100	70	170	140	55	240	190	248	216	50	44	1/4B	120	130	15	12	12	15	100	95
GSD2 32-200	50	32	5.5	132S	3A	80	206	410	28	295	435	160	180	150	132	205	696	100	70	170	140	55	240	190	248	216	50	44	1/4B	138	149	15	12	12	15	100	103
			7.5	132S	3A	80	206	410	28	295	435	160	180	150	132	205	696	100	70	170	140	55	240	190	248	216	50	44	1/4B	138	149	15	12	12	15	100	109
			9.2	132M	3A	80	206	410	28	295	473	160	180	150	132	205	696	100	70	210	178	55	240	190	248	216	50	44	1/4B	138	149	15	12	12	15	100	117
			11	160M/L	5A	80	236	524	0	344	598	160	180	175	160	255	840	100	70	298	254	65	240	190	308	254	50	62	1/4B	138	149	15	14.5	18	15	100	168
			15	160M/L	5A	80	236	524	0	344	598	160	180	175	160	255	840	100	70	298	254	65	240	190	308	254	50	62	1/4B	138	149	15	14.5	18	15	100	171
GSD2 32-250	50	32	7.5	132S	3C	100	206	410	48	295	435	180	225	150	132	205	716	125	95	170	140	55	320	250	248	216	65	44	1/4B	162	172	15	12	12	15	100	118
			9.2	132M	3C	100	206	410	48	295	473	180	225	150	132	205	716	125	95	210	178	55	320	250	248	216	65	44	1/4B	162	172	15	12	12	15	100	126
			11	160M/L	3A	100	236	524	20	344	598	180	225	175	160	255	860	125	95	298	254	65	320	250	308	254	65	62	1/4B	162	172	15	14.5	18	15	100	176
			15	160M/L	3A	100	236	524	20	344	598	180	225	175	160	255	860	125	95	298	254	65	320	250	308	254	65	62	1/4B	162	172	15	14.5	18	15	100	179
			18.5	160M/L	3A	100	236	524	20	344	598	180	225	175	160	255	860	125	95	298	254	65	320	250	308	254	65	62	1/4B	162	172	15	14.5	18	15	100	187
GSD2 40-125	65	40	1.5	90S/L	1A	80	176	279	N/A	N/A	N/A	112	140	100	90	155	535	100	70	N/A	N/A	42	210	160	170	140	50	35	1/4B	105	124	15	N/A	9	13	100	48
			2.2	90S/L	1A	80	176	279	N/A	N/A	N/A	112	140	100	90	155	535	100	70	N/A	N/A	42	210	160	170	140	50	35	1/4B	105	124	15	N/A	9	13	100	50
			3	100L	5A	80	186	316	12	249	389	112	140	125	100	165	582	100	70	170	140	50	210	160	196	160	50	40	1/4B	105	124	15	12	12	13	100	61
			4	112M	5A	80	186	333	0	256	396	112	140	125	112	185	599	100	70	170	140	50	210	160	220	190	50	46	1/4B	105	124	15	12	12	13	100	67
			5.5	132S	5A	80	206	410	-20	295	435	112	140	150	132	205	696	100	70	170	140	55	210	160	248	216	50	44	1/4B	105	124	15	12	12	13	100	95
GSD2 40-160	65	40	4	112M	3A	80	186	333	20	256	396	132	160	125	112	185	599	100	70	170	140	50	240	190	220	190	50	46	1/4B	122	140	15	12	12	13	100	70
			5.5	132S	5A	80	206	410	0	295	435	132	160	150	132	205	696	100	70	170	140	55	240	190	248	216	50	44	1/4B	122	140	15	12	12	13	100	98
			7.5	132S	5A	80	206	410	0	295	435	132	160	150	132	205	696	100	70	170	140	55	240	190	248	216	50	44	1/4B	122	140	15	12	12	13	100	104
			9.2	132M	5A	80	206	410	0	295	473	132	160	150	132	205	696	100	70	210	178	55	240	190	248	216	50	44	1/4B	122	140	15	12	12	13	100	112
			11	160M/L	5A	80	236	524	-28	344	598	132	160	175	160	255	840	100	70	298	254	65	240	190	308	254	50	62	1/4B	122	140	15	14.5	18	13	100	163
GSD2 40-200	65	40	9.2	132M	3A	100	206	410	28	295	473	160	180	150	132	205	716	100	70	210	178	55	265	212	248	216	50	44	1/4B	143	160	15	12	12	15	100	120
			11	160M/L	5A	100	236	524	0	344	598	160	180	175	160	255	860	100	70	298	254	65	265	212	308	254	50	62	1/4B	143	160	15	14.5	18	15	100	172
			15	160M/L	5A	100	236	524	0	344	598	160	180	175	160	255	860	100	70	298	254	65	265	212	308	254	50	62	1/4B	143	160	15	14.5	18	15	100	175
			18.5	160M/L	5A	100	236	524	0	344	598	160	180	175	160	255	860	100	70	298	254	65	265	212	308	254	50	62	1/4B	143	160	15	14.5	18	15	100	183
GSD2 40-250	65	40	15	160M/L	3A	100	236	524	20	344	598	180	225	175	160	255	860	125	95	298	254	65	320	250	308	254	65	62	1/4B	164	176	15	14.5	18	15	100	181
			18.5	160M/L	3A	100	236	524	20	344	598	180	225	175	160	255	860	125	95	298	254	65	320	250	308	254	65	62	1/4B	164	176	15	14.5	18	15	100	189
			22	180M/L	2A	100	236	584	0	357	636	180	225	175	180	274	920	125	95	332	279	75	320	250	350	279	65	68	1/4B	164	176	15	14.5	20	15	100	223
			30	200M/L	5B	100	236	648	-20	369	674	180	225	200	200	300	984	125	95	370	305	85	320	250	385	318	65	73	1/4B	164	176	15	18.5	25	15	100	297
GSD2 40-315	65	40	30	200M/L	3B	125	261	648	25	394	699	225	250	200	200	300	1034	125	95	370	305	85	345	280	385	318	65	73	1/4B	201	211	15	18.5	25	15	100	318
			37	200M/L	3B	125	261	648	25	394	699	225	250	200	200	300	1034	125	95	370	305	85	345	280	385	318	65	73	1/4B	201	211	15	18.5	25	15	100	330
			45	225S/M2P	5B	125	261	707	0	410	721	225	250	225	225	373	1093	125	95	391	311	105	345	280	436	356	65	80	1/4B	201	211	15	18.5	34	15	100	516
			55	250S/M2P	5B	125	291	783	-25	459	808	225	250	275	250	373	1199	125	95	449	349	138	345	280	506	406	65	100	1/4B	201	211	15	24	42	15	100	592

Ebara End Suction Motor Pumps (to EN733) Model GSD

Dimensions motor pump only - no spacers *(for reference only)*

2 Pole Models	SØ	DØ	Power kW	Motor Fr W21 IE3	Type	Dimensions in mm *(refers to drawing on page 429)*																															Approx. Weight kg
						A	B	C	CPM	E1	E2	H1	H2	H3	HM	HT	L	M1	M2	M3	M4	M5	N1	N2	N3	N4	N5	N6	PG	PW1	PW2	ØP	ØM	VM	VP	X	
GSD2 50-125	65	50	3	100L	3A	100	186	316	32	249	389	132	160	125	100	165	602	100	70	170	140	50	240	190	196	160	50	40	1/4B	120	145	15	12	12	15	100	66
			4	112M	3A	100	186	333	20	256	396	132	160	125	112	185	619	100	70	170	140	50	240	190	220	190	50	46	1/4B	120	145	15	12	12	15	100	72
			5.5	132S	5A	100	206	410	0	295	435	132	160	150	132	205	716	100	70	170	140	55	240	190	248	216	50	44	1/4B	120	145	15	12	12	15	100	100
			7.5	132S	5A	100	206	410	0	295	435	132	160	150	132	205	716	100	70	170	140	55	240	190	248	216	50	44	1/4B	120	145	15	12	12	15	100	106
GSD2 50-160	65	50	5.5	132S	3A	100	206	410	28	295	435	160	180	150	132	205	716	100	70	170	140	55	265	212	248	216	50	44	1/4B	133	149	15	12	12	15	100	99
			7.5	132S	3A	100	206	410	28	295	435	160	180	150	132	205	716	100	70	170	140	55	265	212	248	216	50	44	1/4B	133	149	15	12	12	15	100	105
			9.2	132M	3A	100	206	410	28	295	473	160	180	150	132	205	716	100	70	210	178	55	265	212	248	216	50	44	1/4B	133	149	15	12	12	15	100	113
			11	160M/L	5A	100	236	524	0	344	598	160	180	175	160	255	860	100	70	298	254	65	265	212	308	254	50	62	1/4B	133	149	15	14.5	18	15	100	165
			15	160M/L	5A	100	236	524	0	344	598	160	180	175	160	255	860	100	70	298	254	65	265	212	308	254	50	62	1/4B	133	149	15	14.5	18	15	100	168
GSD2 50-200	65	50	15	160M/L	5A	100	236	524	0	344	598	160	200	175	160	255	860	100	70	298	254	65	265	212	308	254	50	62	1/4B	144	163	15	14.5	18	15	100	177
			18.5	160M/L	5A	100	236	524	0	344	598	160	200	175	160	255	860	100	70	298	254	65	265	212	308	254	50	62	1/4B	144	163	15	14.5	18	15	100	185
			22	180M/L	4A	100	236	584	-20	357	636	160	200	175	180	274	920	100	70	332	279	75	265	212	350	279	50	68	1/4B	144	163	15	14.5	20	15	100	219
			30	200M/L	5B	100	236	648	-40	369	674	160	200	200	200	300	984	100	70	370	305	85	265	212	385	318	50	73	1/4B	144	163	15	18.5	25	15	100	291
GSD2 50-250	65	50	22	180M/L	2A	100	236	584	0	357	636	180	225	175	180	274	920	125	95	332	279	75	320	250	350	279	65	68	1/4B	166	180	15	14.5	20	15	100	224
			30	200M/L	5B	100	236	648	-20	369	674	180	225	200	200	300	984	125	95	370	305	85	320	250	385	318	65	73	1/4B	166	180	15	18.5	25	15	100	298
			37	200M/L	5B	100	236	648	-20	369	674	180	225	200	200	300	984	125	95	370	305	85	320	250	385	318	65	73	1/4B	166	180	15	18.5	25	15	100	310
			45	225S/M2P	5B	100	236	707	-45	385	696	180	225	225	225	373	1043	125	95	391	311	105	320	250	436	356	65	80	1/4B	166	180	15	18.5	34	15	100	496
GSD2 50-315	65	50	45	225S/M2P	5B	125	261	707	0	410	721	225	280	225	225	373	1093	125	95	391	311	105	345	280	436	356	65	80	1/4B	205	220	15	18.5	34	15	100	520
			55	250S/M2P	5B	125	291	783	-25	459	808	225	280	275	250	373	1199	125	95	449	349	138	345	280	506	406	65	100	1/4B	205	220	15	24	42	15	100	597
			75	250S/M2P	5B	125	291	783	-25	459	808	225	280	275	250	373	1199	125	95	449	349	138	345	280	506	406	65	100	1/4B	205	220	15	24	42	15	100	627
GSD2 65-125	80	65	5.5	132S	3A	100	206	410	28	295	435	160	180	150	132	205	716	125	95	170	140	55	280	212	248	216	65	44	1/4B	140	160	15	12	12	15	100	103
			7.5	132S	3A	100	206	410	28	295	435	160	180	150	132	205	716	125	95	170	140	55	280	212	248	216	65	44	1/4B	140	160	15	12	12	15	100	109
			9.2	132M	3A	100	206	410	28	295	473	160	180	150	132	205	716	125	95	210	178	55	280	212	248	216	65	44	1/4B	140	160	15	12	12	15	100	117
			11	160M/L	5A	100	236	524	0	344	598	160	180	175	160	255	860	125	95	298	254	65	280	212	308	254	65	62	1/4B	140	160	15	14.5	18	15	100	169
GSD2 65-160	80	65	7.5	132S	3A	100	206	410	28	295	435	160	200	150	132	205	716	125	95	170	140	55	280	212	248	216	65	44	1/4B	146	174	15	12	12	15	100	112
			9.2	132M	3A	100	206	410	28	295	473	160	200	150	132	205	716	125	95	210	178	55	280	212	248	216	65	44	1/4B	146	174	15	12	12	15	100	120
			11	160M/L	5A	100	236	524	0	344	598	160	200	175	160	255	860	125	95	298	254	65	280	212	308	254	65	62	1/4B	146	174	15	14.5	18	15	100	172
			15	160M/L	5A	100	236	524	0	344	598	160	200	175	160	255	860	125	95	298	254	65	280	212	308	254	65	62	1/4B	146	174	15	14.5	18	15	100	175
			18.5	160M/L	5A	100	236	524	0	344	598	160	200	175	160	255	860	125	95	298	254	65	280	212	308	254	65	62	1/4B	146	174	15	14.5	18	15	100	183
GSD2 65-200	80	65	15	160M/L	3A	100	236	524	20	344	598	180	225	175	160	255	860	125	95	298	254	65	320	250	308	254	65	62	1/4B	160	177	15	14.5	18	15	140	178
			18.5	160M/L	3A	100	236	524	20	344	598	180	225	175	160	255	860	125	95	298	254	65	320	250	308	254	65	62	1/4B	160	177	15	14.5	18	15	140	186
			22	180M/L	2A	100	236	584	0	357	636	180	225	175	180	274	920	125	95	332	279	75	320	250	350	279	65	68	1/4B	160	177	15	14.5	20	15	140	220
			30	200M/L	5B	100	236	648	-20	369	674	180	225	200	200	300	984	125	95	370	305	85	320	250	385	318	65	73	1/4B	160	177	15	18.5	25	15	140	294
			37	200M/L	5B	100	236	648	-20	369	674	180	225	200	200	300	984	125	95	370	305	85	320	250	385	318	65	73	1/4B	160	177	15	18.5	25	15	140	306
GSD2 65-250	80	65	30	200M/L	5B	100	261	648	0	394	699	200	250	200	200	300	1009	160	120	370	305	85	360	280	385	318	80	73	1/4B	182	207	19	18.5	25	19	140	313
			37	200M/L	5B	100	261	648	0	394	699	200	250	200	200	300	1009	160	120	370	305	85	360	280	385	318	80	73	1/4B	182	207	19	18.5	25	19	140	325
			45	225S/M2P	5B	100	261	707	-25	410	721	200	250	225	225	373	1068	160	120	391	311	105	360	280	436	356	80	80	1/4B	182	207	19	18.5	34	19	140	512
			55	250S/M2P	5B	100	291	783	-50	459	808	200	250	275	250	373	1174	160	120	449	349	138	360	280	506	406	80	100	1/4B	182	207	19	24	42	19	140	591
			75	250S/M2P	5B	100	291	783	-50	459	808	200	250	275	250	373	1174	160	120	449	349	138	360	280	506	406	80	100	1/4B	182	207	19	24	42	19	140	621

Ebara End Suction Motor Pumps (to EN733)

Model **GSD**

Dimensions motor pump only - no spacers *(for reference only)*

2 Pole Models	SØ	DØ	Power kW	Motor Fr W21 IE3	Type	Dimensions in mm *(refers to drawing on page 429)*																																Approx. Weight kg
						A	B	C	CPM	E1	E2	H1	H2	H3	HM	HT	L	M1	M2	M3	M4	M5	N1	N2	N3	N4	N5	N6	PG	PW1	PW2	ØP	ØM	VM	VP	X	
GSD2 65-315	80	65	75	250S/M2P	5B	125	291	783	-25	459	808	225	280	275	250	373	1199	160	120	449	349	138	400	315	506	406	80	100	1/4B	205	223	19	24	42	19	140	631
			90	280S/M2P	4A	125	291	896	-55	481	900	225	280	275	280	468	1312	160	120	510	419	142	400	315	557	457	80	100	1/4B	205	223	19	24	42	19	140	900
			110	280S/M2P	4A	125	291	896	-55	481	900	225	280	275	280	468	1312	160	120	510	419	142	400	315	557	457	80	100	1/4B	205	223	19	24	42	19	140	950
GSD2 80-160	100	80	11	160M/L	3A	125	236	524	20	344	598	180	225	175	160	255	885	125	95	298	254	65	320	250	308	254	65	62	1/4B	160	194	15	14.5	18	15	140	179
			15	160M/L	3A	125	236	524	20	344	598	180	225	175	160	255	885	125	95	298	254	65	320	250	308	254	65	62	1/4B	160	194	15	14.5	18	15	140	182
			18.5	160M/L	3A	125	236	524	20	344	598	180	225	175	160	255	885	125	95	298	254	65	320	250	308	254	65	62	1/4B	160	194	15	14.5	18	15	140	190
			22	180M/L	2A	125	236	584	0	357	636	180	225	175	180	274	945	125	95	332	279	75	320	250	350	279	65	68	1/4B	160	194	15	14.5	20	15	140	223
			30	200M/L	5B	125	236	648	-20	369	674	180	225	200	200	300	1009	125	95	370	305	85	320	250	385	318	65	73	1/4B	160	194	15	18.5	25	15	140	298
GSD2 80-200	100	80	22	180M/L	2A	125	261	584	0	382	661	180	250	175	180	274	970	125	95	332	279	75	345	280	350	279	65	68	1/4B	173	196	15	14.5	20	15	140	231
			30	200M/L	5B	125	261	648	-20	394	699	180	250	200	200	300	1034	125	95	370	305	85	345	280	385	318	65	73	1/4B	173	196	15	18.5	25	15	140	306
			37	200M/L	5B	125	261	648	-20	394	699	180	250	200	200	300	1034	125	95	370	305	85	345	280	385	318	65	73	1/4B	173	196	15	18.5	25	15	140	318
			45	225S/M2P	5B	125	261	707	-45	410	721	180	250	225	225	373	1093	125	95	391	311	105	345	280	436	356	65	80	1/4B	173	196	15	18.5	34	15	140	503
			55	250S/M2P	5B	125	291	783	-70	459	808	180	250	275	250	373	1199	125	95	449	349	138	345	280	506	406	65	100	1/4B	173	196	15	24	42	15	140	580
			75	250S/M2P	5B	125	291	783	-70	459	808	180	250	275	250	373	1199	125	95	449	349	138	345	280	506	406	65	100	1/4B	173	196	15	24	42	15	140	610
GSD2 80-250	100	80	55	250S/M2P	5B	125	291	783	-50	459	808	200	280	275	250	373	1199	160	120	449	349	138	400	315	506	406	80	100	1/4B	200	216	19	24	42	19	140	597
			75	250S/M2P	5B	125	291	783	-50	459	808	200	280	275	250	373	1199	160	120	449	349	138	400	315	506	406	80	100	1/4B	200	216	19	24	42	19	140	627
			90	280S/M2P	4A	125	291	896	-80	481	900	200	280	275	280	468	1312	160	120	510	419	142	400	315	557	457	80	100	1/4B	200	216	19	24	42	19	140	896
			110	280S/M2P	4A	125	291	896	-80	481	900	200	280	275	280	468	1312	160	120	510	419	142	400	315	557	457	80	100	1/4B	200	216	19	24	42	19	140	946
GSD2 100-160	125	100	15	160M/L	6A	125	261	524	40	369	623	200	250	175	160	255	910	160	120	298	254	65	360	280	308	254	80	62	3/8B	180	190	19	14.5	18	16	140	197
			18.5	160M/L	6A	125	261	524	40	369	623	200	250	175	160	255	910	160	120	298	254	65	360	280	308	254	80	62	3/8B	180	190	19	14.5	18	16	140	205
			22	180M/L	3B	125	261	584	20	382	661	200	250	175	180	274	970	160	120	332	279	75	360	280	350	279	80	68	3/8B	180	190	19	14.5	20	16	140	237
			30	200M/L	5B	125	261	648	0	394	699	200	250	200	200	300	1034	160	120	370	305	85	360	280	385	318	80	73	3/8B	180	190	19	18.5	25	16	140	305
			37	200M/L	5B	125	261	648	0	394	699	200	250	200	200	300	1034	160	120	370	305	85	360	280	385	318	80	73	3/8B	180	190	19	18.5	25	16	140	317
GSD2 100-200	125	100	30	200M/L	5B	125	261	648	0	394	699	200	280	200	200	300	1034	160	120	370	305	85	360	280	385	318	80	73	3/8B	182	220	19	18.5	25	16	140	322
			37	200M/L	5B	125	261	648	0	394	699	200	280	200	200	300	1034	160	120	370	305	85	360	280	385	318	80	73	3/8B	182	220	19	18.5	25	16	140	334
			45	225S/M2P	5B	125	261	707	-25	410	721	200	280	225	225	373	1093	160	120	391	311	105	360	280	436	356	80	80	3/8B	182	220	19	18.5	34	16	140	521
			55	250S/M2P	5B	125	291	783	-50	459	808	200	280	275	250	373	1199	160	120	449	349	138	360	280	506	406	80	100	3/8B	182	220	19	24	42	16	140	600
			75	250S/M2P	5B	125	291	783	-50	459	808	200	280	275	250	373	1199	160	120	449	349	138	360	280	506	406	80	100	3/8B	182	220	19	24	42	16	140	630
GSD2 100-250	125	100	55	250S/M2P	5B	140	291	783	-25	459	808	225	280	275	250	373	1214	160	120	449	349	138	400	315	506	406	80	100	3/8B	200	215	19	24	42	16	140	598
			75	250S/M2P	5B	140	291	783	-25	459	808	225	280	275	250	373	1214	160	120	449	349	138	400	315	506	406	80	100	3/8B	200	215	19	24	42	16	140	628
			90	280S/M2P	4A	140	291	896	-55	481	900	225	280	275	280	468	1327	160	120	510	419	142	400	315	557	457	80	100	3/8B	200	215	19	24	42	16	140	896
			110	280S/M2P	4A	140	291	896	-55	481	900	225	280	275	280	468	1327	160	120	510	419	142	400	315	557	457	80	100	3/8B	200	215	19	24	42	16	140	946
GSD2 125-200	150	125	55	250S/M2P	5B	140	291	783	0	459	808	250	315	275	250	373	1214	160	120	449	349	138	400	315	506	406	80	100	3/8B	200	247	19	24	42	19	140	606
			75	250S/M2P	5B	140	291	783	0	459	808	250	315	275	250	373	1214	160	120	449	349	138	400	315	506	406	80	100	3/8B	200	247	19	24	42	19	140	636
			90	280S/M2P	4A	140	291	896	-30	481	900	250	315	275	280	468	1327	160	120	510	419	142	400	315	557	457	80	100	3/8B	200	247	19	24	42	19	140	905
			110	280S/M2P	4A	140	291	896	-30	481	900	250	315	275	280	468	1327	160	120	510	419	142	400	315	557	457	80	100	3/8B	200	247	19	24	42	19	140	955
GSD2 150-200	200	150	37	200M/L	6A	160	261	648	80	394	699	280	355	200	200	300	1069	200	150	370	305	85	500	400	385	318	100	73	3/8B	250	273	24	18.5	25	20	140	396
			45	225S/M2P	6A	160	261	707	55	410	721	280	355	225	225	373	1128	200	150	391	311	105	500	400	436	356	100	80	3/8B	250	273	24	18.5	34	20	140	577
			55	250S/M2P	3B	160	291	783	30	459	808	280	355	275	250	373	1234	200	150	449	349	138	500	400	506	406	100	100	3/8B	250	273	24	24	42	20	140	638
			75	250S/M2P	3B	160	291	783	30	459	808	280	355	275	250	373	1234	200	150	449	349	138	500	400	506	406	100	100	3/8B	250	273	24	24	42	20	140	668
			90	280S/M2P	2A	160	291	896	0	481	900	280	355	275	280	468	1347	200	150	510	419	142	500	400	557	457	100	100	3/8B	250	273	24	24	42	20	140	937
			110	280S/M2P	2A	160	291	896	0	481	900	280	355	275	280	468	1347	200	150	510	419	142	500	400	557	457	100	100	3/8B	250	273	24	24	42	20	140	987

Ebara End Suction Motor Pumps (to EN733)

Model **GSD**

Dimensions motor pump only - no spacers *(for reference only)*

4 Pole Models	SØ	DØ	Power kW	Motor Fr W21 IE3	Type	Dimensions in mm *(refers to drawing on page 429)*																														Approx. Weight kg
						A	B	C	CPM	E1	E2	H1	H2	H3	HM	HT	L	M1	M2	M3	M4	M5	N1	N2	N3	N4	N5	N6	PG	PW1	PW2	ØP	ØM	VM	VP	X	
GSD4 32-200	50	32	1.1	90S/L	1A	80	176	279	N/A	N/A	N/A	160	180	100	90	155	535	100	70	N/A	N/A	42	240	190	170	140	50	35	1/4B	138	149	15	N/A	9	15	100	59
			1.5	90S/L	1A	80	176	279	N/A	N/A	N/A	160	180	100	90	155	535	100	70	N/A	N/A	42	240	190	170	140	50	35	1/4B	138	149	15	N/A	9	15	100	60
GSD4 32-250	50	32	1.1	90S/L	1A	100	176	279	N/A	N/A	N/A	180	225	100	90	155	555	125	95	N/A	N/A	42	320	250	170	140	65	35	1/4B	162	172	15	N/A	9	15	100	68
			1.5	90S/L	1A	100	176	279	N/A	N/A	N/A	180	225	100	90	155	555	125	95	N/A	N/A	42	320	250	170	140	65	35	1/4B	162	172	15	N/A	9	15	100	70
			2.2	100L	3C	100	186	316	80	249	389	180	225	125	100	165	602	125	95	170	140	50	320	250	196	160	65	40	1/4B	162	172	15	12	12	15	100	82
GSD4 40-160	65	40	1.1	90S/L	1A	80	176	279	N/A	N/A	N/A	132	160	100	90	155	535	100	70	N/A	N/A	42	240	190	170	140	50	35	1/4B	122	140	15	N/A	9	13	100	52
GSD4 40-200	65	40	1.1	90S/L	1A	100	176	279	N/A	N/A	N/A	160	180	100	90	155	555	100	70	N/A	N/A	42	265	212	170	140	50	35	1/4B	143	160	15	N/A	9	15	100	62
			1.5	90S/L	1A	100	176	279	N/A	N/A	N/A	160	180	100	90	155	555	100	70	N/A	N/A	42	265	212	170	140	50	35	1/4B	143	160	15	N/A	9	15	100	64
			2.2	100L	3C	100	186	316	60	249	389	160	180	125	100	165	602	100	70	170	140	50	265	212	196	160	50	40	1/4B	143	160	15	12	12	15	100	76
GSD4 40-250	65	40	2.2	100L	3C	100	186	316	80	249	389	180	225	125	100	165	602	125	95	170	140	50	320	250	196	160	65	40	1/4B	164	176	15	12	12	15	100	84
			3	100L	3C	100	186	316	80	249	389	180	225	125	100	165	602	125	95	170	140	50	320	250	196	160	65	40	1/4B	164	176	15	12	12	15	100	89
			4	112M	6B	100	186	333	68	256	396	180	225	125	112	185	619	125	95	170	140	50	320	250	220	190	65	46	1/4B	164	176	15	12	12	15	100	92
GSD4 40-315	65	40	4	112M	1A	125	211	333	N/A	N/A	N/A	225	250	125	112	185	669	125	95	N/A	N/A	50	345	280	220	190	65	46	1/4B	201	211	15	N/A	12	15	100	119
			5.5	132S	6B	125	231	410	93	320	460	225	250	150	132	205	766	125	95	170	140	55	345	280	248	216	65	44	1/4B	201	211	15	12	12	15	100	137
			7.5	132M	6B	125	231	410	93	320	498	225	250	150	132	205	766	125	95	210	178	55	345	280	248	216	65	44	1/4B	201	211	15	12	12	15	100	145
GSD4 50-125	65	50	1.1	90S/L	1A	100	176	279	N/A	N/A	N/A	132	160	100	90	155	555	100	70	N/A	N/A	42	240	190	170	140	50	35	1/4B	120	145	15	N/A	9	15	100	54
GSD4 50-160	65	50	1.1	90S/L	1A	100	176	279	N/A	N/A	N/A	160	180	100	90	155	555	100	70	N/A	N/A	42	265	212	170	140	50	35	1/4B	133	149	15	N/A	9	15	100	55
			1.5	90S/L	1A	100	176	279	N/A	N/A	N/A	160	180	100	90	155	555	100	70	N/A	N/A	42	265	212	170	140	50	35	1/4B	133	149	15	N/A	9	15	100	57
GSD4 50-200	65	50	2.2	100L	3C	100	186	316	60	249	389	160	200	125	100	165	602	100	70	170	140	50	265	212	196	160	50	40	1/4B	144	163	15	12	12	15	100	79
			3	100L	3C	100	186	316	60	249	389	160	200	125	100	165	602	100	70	170	140	50	265	212	196	160	50	40	1/4B	144	163	15	12	12	15	100	84
GSD4 50-250	65	50	3	100L	3C	100	186	316	80	249	389	180	225	125	100	165	602	125	95	170	140	50	320	250	196	160	65	40	1/4B	166	180	15	12	12	15	100	90
			4	112M	6B	100	186	333	68	256	396	180	225	125	112	185	619	125	95	170	140	50	320	250	220	190	65	46	1/4B	166	180	15	12	12	15	100	93
			5.5	132S	3C	100	206	410	48	295	435	180	225	150	132	205	716	125	95	170	140	55	320	250	248	216	65	44	1/4B	166	180	15	12	12	15	100	111
GSD4 50-315	65	50	5.5	132S	6B	125	231	410	93	320	460	225	280	150	132	205	766	125	95	170	140	55	345	280	248	216	65	44	1/4B	205	220	15	12	12	15	100	141
			7.5	132M	6B	125	231	410	93	320	498	225	280	150	132	205	766	125	95	210	178	55	345	280	248	216	65	44	1/4B	205	220	15	12	12	15	100	149
			11	160M/L	6A	125	261	524	65	369	623	225	280	175	160	255	910	125	95	298	254	65	345	280	308	254	65	62	1/4B	205	220	15	14.5	18	15	100	213
GSD4 65-125	80	65	1.1	90S/L	1A	100	176	279	N/A	N/A	N/A	160	180	100	90	155	555	125	95	N/A	N/A	42	280	212	170	140	65	35	1/4B	140	160	15	N/A	9	15	100	59
			1.5	90S/L	1A	100	176	279	N/A	N/A	N/A	160	180	100	90	155	555	125	95	N/A	N/A	42	280	212	170	140	65	35	1/4B	140	160	15	N/A	9	15	100	60
GSD4 65-160	80	65	1.1	90S/L	1A	100	176	279	N/A	N/A	N/A	160	200	100	90	155	555	125	95	N/A	N/A	42	280	212	170	140	65	35	1/4B	146	174	15	N/A	9	15	100	62
			1.5	90S/L	1A	100	176	279	N/A	N/A	N/A	160	200	100	90	155	555	125	95	N/A	N/A	42	280	212	170	140	65	35	1/4B	146	174	15	N/A	9	15	100	63
			2.2	100L	3C	100	186	316	60	249	389	160	200	125	100	165	602	125	95	170	140	50	280	212	196	160	65	40	1/4B	146	174	15	12	12	15	100	76
GSD4 65-200	80	65	2.2	100L	3C	100	186	316	80	249	389	180	225	125	100	165	602	125	95	170	140	50	320	250	196	160	65	40	1/4B	160	177	15	12	12	15	140	82
			3	100L	3C	100	186	316	80	249	389	180	225	125	100	165	602	125	95	170	140	50	320	250	196	160	65	40	1/4B	160	177	15	12	12	15	140	86
			4	112M	6B	100	186	333	68	256	396	180	225	125	112	185	619	125	95	170	140	50	320	250	220	190	65	46	1/4B	160	177	15	12	12	15	140	89
GSD4 65-250	80	65	4	112M	6B	100	211	333	88	281	421	200	250	125	112	185	644	160	120	170	140	50	360	280	220	190	80	46	1/4B	182	207	19	12	12	19	140	108
			5.5	132S	6B	100	231	410	68	320	460	200	250	150	132	205	741	160	120	170	140	55	360	280	248	216	80	44	1/4B	182	207	19	12	12	19	140	117
			7.5	132M	6B	100	231	410	68	320	498	200	250	150	132	205	741	160	120	210	178	55	360	280	248	216	80	44	1/4B	182	207	19	12	12	19	140	134
GSD4 65-315	80	65	11	160M/L	6A	125	261	524	65	369	623	225	280	175	160	255	910	160	120	298	254	65	400	315	308	254	80	62	1/4B	205	223	19	14.5	18	19	140	214
			15	160M/L	6A	125	261	524	65	369	623	225	280	175	160	255	910	160	120	298	254	65	400	315	308	254	80	62	1/4B	205	223	19	14.5	18	19	140	223

Ebara End Suction Motor Pumps (to EN733)

Model **GSD**

Dimensions motor pump only - no spacers *(for reference only)*

4 Pole Models	SØ	DØ	Power kW	Motor Fr W21 IE3	Type	Dimensions in mm *(refers to drawing on page 429)* A	B	C	CPM	E1	E2	H1	H2	H3	HM	HT	L	M1	M2	M3	M4	M5	N1	N2	N3	N4	N5	N6	PG	PW1	PW2	ØP	ØM	VM	VP	X	Approx. Weight kg
GSD4 80-160	100	80	1.5	90S/L	1A	125	176	279	N/A	N/A	N/A	180	225	100	90	155	580	125	95	N/A	N/A	42	320	250	170	140	65	35	1/4B	160	194	15	N/A	9	15	140	73
			2.2	100L	3C	125	186	316	80	249	389	180	225	125	100	165	627	125	95	170	140	50	320	250	196	160	65	40	1/4B	160	194	15	12	12	15	140	85
			3	100L	3C	125	186	316	80	249	389	180	225	125	100	165	627	125	95	170	140	50	320	250	196	160	65	40	1/4B	160	194	15	12	12	15	140	90
			4	112M	6B	125	186	333	68	256	396	180	225	125	112	185	644	125	95	170	140	50	320	250	220	190	65	46	1/4B	160	194	15	12	12	15	140	93
GSD4 80-200	100	80	3	100L	3C	125	211	316	80	274	414	180	250	125	100	165	652	125	95	170	140	50	345	280	196	160	65	40	1/4B	173	196	15	12	12	15	140	98
			4	112M	6B	125	211	333	68	281	421	180	250	125	112	185	669	125	95	170	140	50	345	280	220	190	65	46	1/4B	173	196	15	12	12	15	140	101
			5.5	132S	3C	125	231	410	48	320	460	180	250	150	132	205	766	125	95	170	140	55	345	280	248	216	65	44	1/4B	173	196	15	12	12	15	140	119
			7.5	132M	3C	125	231	410	48	320	498	180	250	150	132	205	766	125	95	210	178	55	345	280	248	216	65	44	1/4B	173	196	15	12	12	15	140	127
GSD4 80-250	100	80	7.5	132M	6B	125	231	410	68	320	498	200	280	150	132	205	766	160	120	210	178	55	400	315	248	216	80	44	1/4B	200	216	19	12	12	19	140	141
			11	160M/L	6A	125	261	524	40	369	623	200	280	175	160	255	910	160	120	298	254	65	400	315	308	254	80	62	1/4B	200	216	19	14.5	18	19	140	203
			15	160M/L	6A	125	261	524	40	369	623	200	280	175	160	255	910	160	120	298	254	65	400	315	308	254	80	62	1/4B	200	216	19	14.5	18	19	140	212
GSD4 80-315	100	80	11	160M/L	6A	125	261	524	90	369	623	250	315	175	160	255	910	160	120	298	254	65	400	315	308	254	80	62	1/4B	217	247	19	14.5	18	19	140	236
			15	160M/L	6A	125	261	524	90	369	623	250	315	175	160	255	910	160	120	298	254	65	400	315	308	254	80	62	1/4B	217	247	19	14.5	18	19	140	245
			18.5	180M/L	6A	125	261	584	70	382	661	250	315	175	180	274	970	160	120	332	279	75	400	315	350	279	80	68	1/4B	217	247	19	14.5	20	19	140	296
			22	180M/L	6A	125	261	584	70	382	661	250	315	175	180	274	970	160	120	332	279	75	400	315	350	279	80	68	1/4B	217	247	19	14.5	20	19	140	309
GSD4 80-400	100	80	22	180M/L	6A	125	286	584	100	407	686	280	355	175	180	274	995	160	120	332	279	75	435	355	350	279	80	68	1/4B	268	296	19	14.5	20	19	140	373
			30	200M/L	6A	125	286	648	80	419	724	280	355	200	200	300	1059	160	120	370	305	85	435	355	385	318	80	73	1/4B	268	296	19	18.5	25	19	140	431
			37	225S/M4P	6A	125	316	707	55	465	776	280	355	225	225	373	1148	160	120	391	311	105	435	355	436	356	80	80	1/4B	268	296	19	18.5	34	19	140	582
			45	225S/M4P	6A	125	316	707	55	465	776	280	355	225	225	373	1148	160	120	391	311	105	435	355	436	356	80	80	1/4B	268	296	19	18.5	34	19	140	602
			55	250S/M4P	3B	125	316	783	30	484	833	280	355	275	250	373	1224	160	120	449	349	138	435	355	506	406	80	100	1/4B	268	296	19	24	42	19	140	672
GSD4 100-160	125	100	2.2	100L	1A	125	211	316	N/A	N/A	N/A	200	250	125	100	165	652	160	120	N/A	N/A	50	360	280	196	160	80	40	3/8B	180	190	19	N/A	12	16	140	94
			3	100L	1A	125	211	316	N/A	N/A	N/A	200	250	125	100	165	652	160	120	N/A	N/A	50	360	280	196	160	80	40	3/8B	180	190	19	N/A	12	16	140	98
			4	112M	6B	125	211	333	88	281	421	200	250	125	112	185	669	160	120	170	140	50	360	280	220	190	80	46	3/8B	180	190	19	12	12	16	140	101
GSD4 100-200	125	100	3	100L	1A	125	211	316	N/A	N/A	N/A	200	280	125	100	165	652	160	120	N/A	N/A	50	360	280	196	160	80	40	3/8B	182	220	19	N/A	12	16	140	115
			4	112M	6B	125	211	333	88	281	421	200	280	125	112	185	669	160	120	170	140	50	360	280	220	190	80	46	3/8B	182	220	19	12	12	16	140	118
			5.5	132S	6B	125	231	410	68	320	460	200	280	150	132	205	766	160	120	170	140	55	360	280	248	216	80	44	3/8B	182	220	19	12	12	16	140	136
			7.5	132M	6B	125	231	410	68	320	498	200	280	150	132	205	766	160	120	210	178	55	360	280	248	216	80	44	3/8B	182	220	19	12	12	16	140	144
			11	160M/L	6A	125	261	524	40	369	623	200	280	175	160	255	910	160	120	298	254	65	360	280	308	254	80	62	3/8B	182	220	19	14.5	18	16	140	206
GSD4 100-250	125	100	7.5	132M	6B	140	231	410	93	320	498	225	280	150	132	205	781	160	120	210	178	55	400	315	248	216	80	44	3/8B	200	215	19	12	12	16	140	147
			11	160M/L	6A	140	261	524	65	369	623	225	280	175	160	255	925	160	120	298	254	65	400	315	308	254	80	62	3/8B	200	215	19	14.5	18	16	140	210
			15	160M/L	6A	140	261	524	65	369	623	225	280	175	160	255	925	160	120	298	254	65	400	315	308	254	80	62	3/8B	200	215	19	14.5	18	16	140	219
			18.5	180M/L	6A	140	261	584	45	382	661	225	280	175	180	274	985	160	120	332	279	75	400	315	350	279	80	68	3/8B	200	215	19	14.5	20	16	140	271
GSD4 100-315	125	100	11	160M/L	6A	140	261	524	90	369	623	250	315	175	160	255	925	160	120	298	254	65	400	315	308	254	80	62	3/8B	200	227	19	14.5	18	16	140	237
			15	160M/L	6A	140	261	524	90	369	623	250	315	175	160	255	925	160	120	298	254	65	400	315	308	254	80	62	3/8B	200	227	19	14.5	18	16	140	246
			18.5	180M/L	6A	140	261	584	70	382	661	250	315	175	180	274	985	160	120	332	279	75	400	315	350	279	80	68	3/8B	200	227	19	14.5	20	16	140	298
			22	180M/L	6A	140	261	584	70	382	661	250	315	175	180	274	985	160	120	332	279	75	400	315	350	279	80	68	3/8B	200	227	19	14.5	20	16	140	311
			30	200M/L	6A	140	261	648	50	394	699	250	315	200	200	300	1049	160	120	370	305	85	400	315	385	318	80	73	3/8B	200	227	19	18.5	25	16	140	368

Ebara End Suction Motor Pumps (to EN733)

Model **GSD**

Dimensions motor pump only - no spacers *(for reference only)*

4 Pole Models	SØ	DØ	Power kW	Motor Fr W21 IE3	Type	Dimensions in mm *(refers to drawing on page 429)*																															Approx. Weight kg
						A	B	C	CPM	E1	E2	H1	H2	H3	HM	HT	L	M1	M2	M3	M4	M5	N1	N2	N3	N4	N5	N6	PG	PW1	PW2	ØP	ØM	VM	VP	X	
GSD4 100-400	125	100	18.5	180M/L	6A	140	286	584	100	407	686	280	355	175	180	274	1010	200	150	332	279	75	500	400	350	279	100	68	3/8B	264	291	24	14.5	20	20	140	376
			22	180M/L	6A	140	286	584	100	407	686	280	355	175	180	274	1010	200	150	332	279	75	500	400	350	279	100	68	3/8B	264	291	24	14.5	20	20	140	389
			30	200M/L	6A	140	286	648	80	419	724	280	355	200	200	300	1074	200	150	370	305	85	500	400	385	318	100	73	3/8B	264	291	24	18.5	25	20	140	449
			37	225S/M4P	6A	140	316	707	55	465	776	280	355	225	225	373	1163	200	150	391	311	105	500	400	436	356	100	80	3/8B	264	291	24	18.5	34	20	140	601
			45	225S/M4P	6A	140	316	707	55	465	776	280	355	225	225	373	1163	200	150	391	311	105	500	400	436	356	100	80	3/8B	264	291	24	18.5	34	20	140	621
			55	250S/M4P	3B	140	316	783	30	484	833	280	355	275	250	373	1239	200	150	449	349	138	500	400	506	406	100	100	3/8B	264	291	24	24	42	20	140	690
GSD4 125-200	150	125	5.5	132S	6B	140	231	410	118	320	460	250	315	150	132	205	781	160	120	170	140	55	400	315	248	216	80	44	3/8B	200	247	19	12	12	16	140	152
			7.5	132M	6B	140	231	410	118	320	498	250	315	150	132	205	781	160	120	210	178	55	400	315	248	216	80	44	3/8B	200	247	19	12	12	16	140	160
			11	160M/L	6A	140	261	524	90	369	623	250	315	175	160	255	925	160	120	298	254	65	400	315	308	254	80	62	3/8B	200	247	19	14.5	18	16	140	225
			15	160M/L	6A	140	261	524	90	369	623	250	315	175	160	255	925	160	120	298	254	65	400	315	308	254	80	62	3/8B	200	247	19	14.5	18	16	140	234
GSD4 125-250	150	125	11	160M/L	6A	140	261	524	90	369	623	250	355	175	160	255	925	160	120	298	254	65	400	315	308	254	80	62	3/8B	215	268	19	14.5	18	16	140	243
			15	160M/L	6A	140	261	524	90	369	623	250	355	175	160	255	925	160	120	298	254	65	400	315	308	254	80	62	3/8B	215	268	19	14.5	18	16	140	252
			18.5	180M/L	6A	140	261	584	70	382	661	250	355	175	180	274	985	160	120	332	279	75	400	315	350	279	80	68	3/8B	215	268	19	14.5	20	16	140	303
			22	180M/L	6A	140	261	584	70	382	661	250	355	175	180	274	985	160	120	332	279	75	400	315	350	279	80	68	3/8B	215	268	19	14.5	20	16	140	316
			30	200M/L	6A	140	261	648	50	394	699	250	355	200	200	300	1049	160	120	370	305	85	400	315	385	318	80	73	3/8B	215	268	19	18.5	25	16	140	374
GSD4 125-315	150	125	18.5	180M/L	6A	140	286	584	100	407	686	280	355	175	180	274	1010	200	150	332	279	75	500	400	350	279	100	68	3/8B	250	282	24	14.5	20	20	140	339
			22	180M/L	6A	140	286	584	100	407	686	280	355	175	180	274	1010	200	150	332	279	75	500	400	350	279	100	68	3/8B	250	282	24	14.5	20	20	140	352
			30	200M/L	6A	140	286	648	80	419	724	280	355	200	200	300	1074	200	150	370	305	85	500	400	385	318	100	73	3/8B	250	282	24	18.5	25	20	140	413
			37	225S/M4P	6A	140	316	707	55	465	776	280	355	225	225	373	1163	200	150	391	311	105	500	400	436	356	100	80	3/8B	250	282	24	18.5	34	20	140	564
GSD4 125-400	150	125	30	200M/L	6A	140	286	648	115	419	724	315	400	200	200	300	1074	200	150	370	305	85	500	400	385	318	100	73	3/8B	274	312	24	18.5	25	20	140	460
			37	225S/M4P	6A	140	316	707	90	465	776	315	400	225	225	373	1163	200	150	391	311	105	500	400	436	356	100	80	3/8B	274	312	24	18.5	34	20	140	614
			45	225S/M4P	6A	140	316	707	90	465	776	315	400	225	225	373	1163	200	150	391	311	105	500	400	436	356	100	80	3/8B	274	312	24	18.5	34	20	140	634
			55	250S/M4P	6A	140	316	783	65	484	833	315	400	275	250	373	1239	200	150	449	349	138	500	400	506	406	100	100	3/8B	274	312	24	24	42	20	140	714
			75	L250S/M	6A	140	316	833	65	484	833	315	400	275	250	378	1289	200	150	449	349	138	500	400	506	406	100	100	3/8B	274	312	24	24	42	20	140	817
GSD4 150-200	200	150	5.5	132S	6B	160	231	410	148	320	460	280	355	150	132	205	801	200	150	170	140	55	500	400	248	216	100	44	3/8B	250	273	24	12	12	20	140	190
			7.5	132M	6B	160	231	410	148	320	498	280	355	150	132	205	801	200	150	210	178	55	500	400	248	216	100	44	3/8B	250	273	24	12	12	20	140	198
			11	160M/L	6A	160	261	524	120	369	623	280	355	175	160	255	945	200	150	298	254	65	500	400	308	254	100	62	3/8B	250	273	24	14.5	18	20	140	265
GSD4 150-250	200	150	18.5	180M/L	6A	160	286	584	100	407	686	280	375	175	180	274	1030	200	150	332	279	75	500	400	350	279	100	68	3/8B	250	300	24	14.5	20	20	140	361
			22	180M/L	6A	160	286	584	100	407	686	280	375	175	180	274	1030	200	150	332	279	75	500	400	350	279	100	68	3/8B	250	300	24	14.5	20	20	140	374
			30	200M/L	6A	160	286	648	80	419	724	280	375	200	200	300	1094	200	150	370	305	85	500	400	385	318	100	73	3/8B	250	300	24	18.5	25	20	140	434
			37	225S/M4P	6A	160	316	707	55	465	776	280	375	225	225	373	1183	200	150	391	311	105	500	400	436	356	100	80	3/8B	250	300	24	18.5	34	20	140	586
			45	225S/M4P	6A	160	316	707	55	465	776	280	375	225	225	373	1183	200	150	391	311	105	500	400	436	356	100	80	3/8B	250	300	24	18.5	34	20	140	606
GSD4 150-315	200	150	22	180M/L	6A	160	286	584	135	407	686	315	400	175	180	274	1030	200	150	332	279	75	550	450	350	279	100	68	3/8B	275	319	24	14.5	20	20	140	390
			30	200M/L	6A	160	286	648	115	419	724	315	400	200	200	300	1094	200	150	370	305	85	550	450	385	318	100	73	3/8B	275	319	24	18.5	25	20	140	451
			37	225S/M4P	6A	160	316	707	90	465	776	315	400	225	225	373	1183	200	150	391	311	105	550	450	436	356	100	80	3/8B	275	319	24	18.5	34	20	140	604
			45	225S/M4P	6A	160	316	707	90	465	776	315	400	225	225	373	1183	200	150	391	311	105	550	450	436	356	100	80	3/8B	275	319	24	18.5	34	20	140	624
			55	250S/M4P	6A	160	316	783	65	484	833	315	400	275	250	373	1259	200	150	449	349	138	550	450	506	406	100	100	3/8B	275	319	24	24	42	20	140	704
			75	L250S/M	6A	160	316	833	65	484	833	315	400	275	250	378	1309	200	150	449	349	138	550	450	506	406	100	100	3/8B	275	319	24	24	42	20	140	807
GSD4 150-400	200	150	37	225S/M4P	6A	160	316	707	90	465	776	315	450	225	225	373	1183	200	150	391	311	105	550	450	436	356	100	80	1/2B	277	393	24	18.5	34	20	140	663
			45	225S/M4P	6A	160	316	707	90	465	776	315	450	225	225	373	1183	200	150	391	311	105	550	450	436	356	100	80	1/2B	277	393	24	18.5	34	20	140	683
			55	250S/M4P	6A	160	316	783	65	484	833	315	450	275	250	373	1259	200	150	449	349	138	550	450	506	406	100	100	1/2B	277	393	24	24	42	20	140	763
			75	L250S/M	6A	160	316	833	65	484	833	315	450	275	250	378	1309	200	150	449	349	138	550	450	506	406	100	100	1/2B	277	393	24	24	42	20	140	866

Pump end dimensions

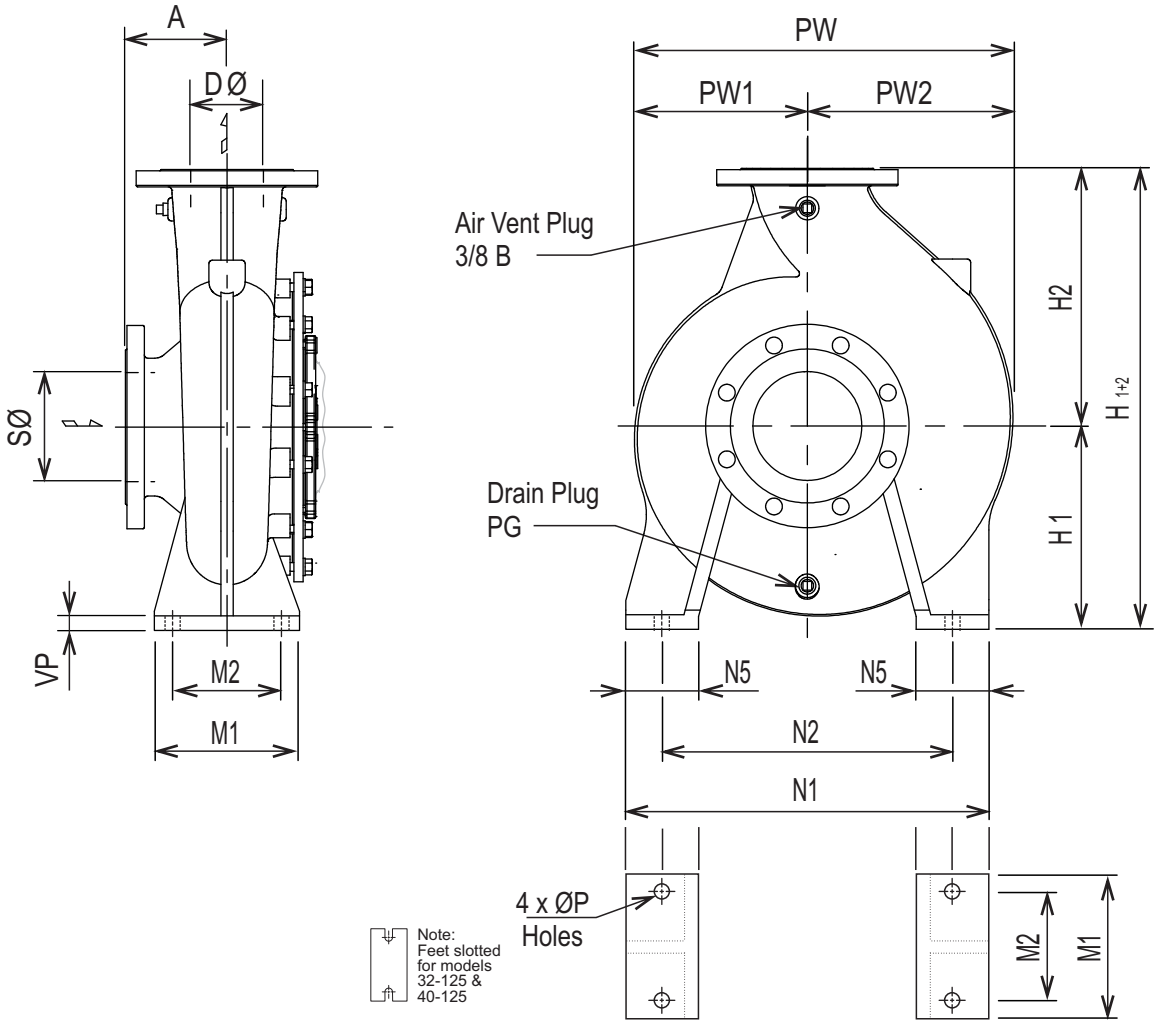

PN 16 Flange Dimensions

EN PN 16 FLANGES, Cast Iron

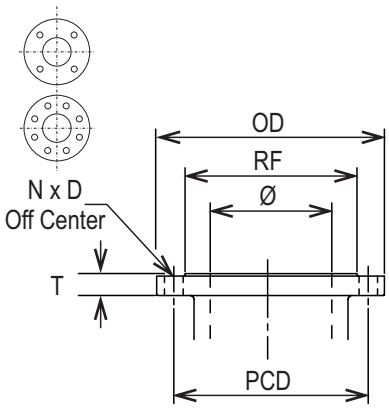

	Suction Flange						*Discharge Flange*					
Model	**SØ**	OD	PCD	RF	T	N x D	**DØ**	OD	PCD	RF	T	N x D
GSD 32	**50**	165	125	99	20	4x19Ø	**32**	140	100	76	18	4x19Ø
GSD 40	**65**	185	145	118	20	4x19Ø	**40**	150	110	84	18	4x19Ø
GSD 50	**65**	185	145	118	20	4x19Ø	**50**	165	125	99	20	4x19Ø
GSD 65	**80**	200	160	132	22	8x19Ø	**65**	185	145	118	20	4x19Ø
GSD 80	**100**	220	180	156	24	8x19Ø	**80**	200	160	132	22	8x19Ø
GSD 100	**125**	250	210	184	26	8x19Ø	**100**	220	180	156	24	8x19Ø
GSD 125	**150**	285	240	211	26	8x23Ø	**125**	250	210	184	26	8x19Ø
GSD 150	**200**	340	295	266	30	12x23Ø	**150**	285	240	211	26	8x23Ø

Pump end dimensions

	Dimensions - mm (refers to drawing on page 436)																
Model	SØ	DØ	A	H1	H2	H_{1+2}	PG	N5	M1	M2	N1	N2	PW1	PW2	PW	VP	ØP
32-125	50	32	80	112	140	252	1/4B	50	100	70	190	140	103	115	218	10	15 (for M12)
32-160			80	132	160	292	1/4B	50	100	70	240	190	120	130	250	15	15 (for M12)
32-200			80	160	180	340	1/4B	50	100	70	240	190	138	149	287	15	15 (for M12)
32-250			100	180	225	405	1/4B	65	125	95	320	250	162	172	334	15	15 (for M12)
40-125	65	40	80	112	140	252	1/4B	50	100	70	210	160	105	124	229	13	15 (for M12)
40-160			80	132	160	292	1/4B	50	100	70	240	190	122	140	262	13	15 (for M12)
40-200			100	160	180	340	1/4B	50	100	70	265	212	143	160	303	15	15 (for M12)
40-250			100	180	225	405	1/4B	65	125	95	320	250	164	176	340	15	15 (for M12)
40-315			125	225	250	475	1/4B	65	125	95	345	280	201	211	412	15	15 (for M12)
50-125	65	50	100	132	160	292	1/4B	50	100	70	240	190	120	145	265	15	15 (for M12)
50-160			100	160	180	340	1/4B	50	100	70	265	212	133	149	282	15	15 (for M12)
50-200			100	160	200	360	1/4B	50	100	70	265	212	144	163	307	15	15 (for M12)
50-250			100	180	225	405	1/4B	65	125	95	320	250	166	180	346	15	15 (for M12)
50-315			125	225	280	505	1/4B	65	125	95	345	280	205	220	425	15	15 (for M12)
65-125	80	65	100	160	180	340	1/4B	65	125	95	280	212	140	160	300	15	15 (for M12)
65-160			100	160	200	360	1/4B	65	125	95	280	212	146	174	320	15	15 (for M12)
65-200			100	180	225	405	1/4B	65	125	95	320	250	160	177	337	15	15 (for M12)
65-250			100	200	250	450	1/4B	80	160	120	360	280	182	207	389	19	19 (for M16)
65-315			125	225	280	505	1/4B	80	160	120	400	315	205	223	428	19	19 (for M16)
80-160	100	80	125	180	225	405	1/4B	65	125	95	320	250	160	194	354	15	15 (for M12)
80-200			125	180	250	430	1/4B	65	125	95	345	280	173	196	369	15	15 (for M12)
80-250			125	200	280	480	1/4B	80	160	120	400	315	200	216	416	19	19 (for M16)
80-315			125	250	315	565	1/4B	80	160	120	400	315	217	247	464	19	19 (for M16)
80-400			125	280	355	635	1/4B	80	160	120	435	355	268	296	564	19	19 (for M16)
100-160	125	100	125	200	250	450	3/8B	80	160	120	360	280	180	190	370	16	19 (for M16)
100-200			125	200	280	480	3/8B	80	160	120	360	280	182	220	402	16	19 (for M16)
100-250			140	225	280	505	3/8B	80	160	120	400	315	200	215	415	16	19 (for M16)
100-315			140	250	315	565	3/8B	80	160	120	400	315	200	227	427	16	19 (for M16)
100-400			140	280	355	635	3/8B	100	200	150	500	400	264	291	555	20	24 (for M20)
125-200	150	125	140	250	315	565	3/8B	80	160	120	400	315	200	247	447	16	19 (for M16)
125-250			140	250	355	605	3/8B	80	160	120	400	315	215	268	483	16	19 (for M16)
125-315			140	280	355	635	3/8B	100	200	150	500	400	250	282	532	20	24 (for M20)
125-400			140	315	400	715	3/8B	100	200	150	500	400	274	312	586	20	24 (for M20)
150-200	200	150	160	280	355	635	3/8B	100	200	150	500	400	250	273	523	20	24 (for M20)
150-250			160	280	375	655	3/8B	100	200	150	500	400	250	300	550	20	24 (for M20)
150-315*			160	315*	400	715	3/8B	100	200	150	550	450	275	319	594	20	24 (for M20)
150-400			160	315	450	765	1/2B	100	200	150	550	450	277	393	670	20	24 (for M20)

* *For 150-315 dimension H1 is 35mm higher than EN standard*

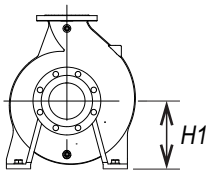

Motor dimensions - WEG W21 IE3 motors

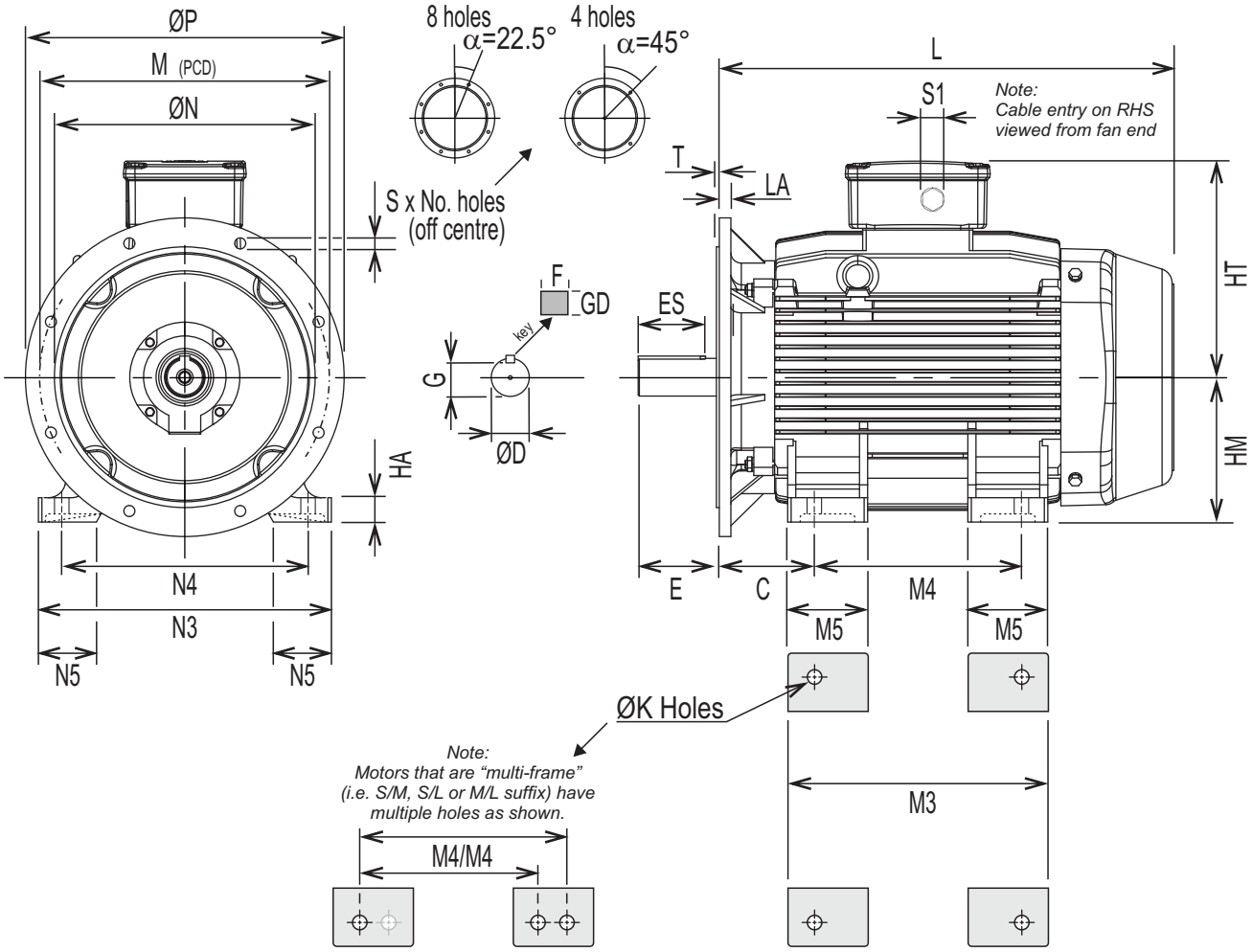

2 pole motors		4 pole motors			
kW	Frame	kW	Frame		
1.5	90S/L	1.1	90S/L	B5 90 Fr.	Aluminium motor frame ≤200 Fr.
2.2	90S/L	1.5	90S/L		
3	100L	2.2	100L	B35 ≥100 Fr.	
4	112M	3	100L		
5.5	132S	4	112M		
7.5	132S	5.5	132S		
9.2	132M	7.5	132M		
11	160M/L	11	160M/L		
15	160M/L	15	160M/L		
18.5	160M/L	18.5	180M/L		
22	180M/L	22	180M/L		
30	200M/L	30	200M/L		
37	200M/L	37	225S/M4P		Cast iron motor frame ≥225 Fr.
45	225S/M2P	45	225S/M4P		
55	250S/M2P	55	250S/M4P		
75	250S/M2P	75	L250S/M4P		
90	280S/M2P				
110	280S/M2P				

Motor dimensions - WEG W21 IE3 motors

IEC Frame	N4	N5	N3	HT	M4	M5	M3	C	HM	HA	ØK	L	S1
90S/L	140	35	170	155	100/125	42	146	56	90	9	10	279	M20x1.5
100L	160	40	196	165	140	50	170	63	100	12	12	316	M20x1.5
112M	190	46	220	185	140	50	170	70	112	12	12	333	M25x1.5
132S	216	44	248	205	140	55	170	89	132	12	12	410	M25x1.5
132M	216	44	248	205	178	55	210	89	132	12	12	410	M25x1.5
160M/L	254	62	308	255	210/254	65	298	108	160	18	14.5	524	2xM32x1.5
180M/L	279	68	350	274	241/279	75	332	121	180	20	14.5	584	2xM40x1.5
200M/L	318	73	385	300	267/305	85	370	133	200	25	18.5	648	2xM50x1.5
225S/M2P	356	80	436	373	286/311	105	391	149	225	34	18.5	707	2xM50x1.5
225S/M4P	356	80	436	373	286/311	105	391	149	225	34	18.5	707	2xM50x1.5
250S/M2P	406	100	506	373	311/349	138	449	168	250	42	24	783	2xM63x1.5
250S/M4P	406	100	506	373	311/349	138	449	168	250	42	24	783	2xM63x1.5
L250S/M4P	406	100	506	377.5	311/349	138	449	168	250	42	24	833	2xM63x1.5
280S/M2P	457	100	557	468	368/419	142	510	190	280	42	24	896	2xM63x1.5

IEC Frame	ØD	E	ES	F	G	GD	Flange	C	LA	M	ØN	ØP	T	S x No. Holes
90S/L	24j6	50	36	8	20	7	FF-165	56	10	165	130	200	3.5	12 x 4
100L	28j6	60	45	8	24	7	FF-215	63	11	215	180	250	4	15 x 4
112M	28j6	60	45	8	24	7	FF-215	70	11	215	180	250	4	15 x 4
132S	38k6	80	63	10	33	8	FF-265	89	12	265	230	300	4	15 x 4
132M	38k6	80	63	10	33	8	FF-265	89	12	265	230	300	4	15 x 4
160M/L	42k6	110	80	12	37	8	FF-300	108	18	300	250	350	5	19 x 4
180M/L	48k6	110	80	14	42.5	9	FF-300	121	18	300	250	350	5	19 x 4
200M/L	55m6	110	80	16	49	10	FF-350	133	18	350	300	400	5	19 x 4
225S/M2P	55m6	110	100	16	49	10	FF-400	149	18	400	350	450	5	19 x 8
225S/M4P	60m6	140	125	18	53	11	FF-400	149	18	400	350	450	5	19 x 8
250S/M2P	60m6	140	125	18	53	11	FF-500	168	18	500	450	550	5	19 x 8
250S/M4P	70m6	140	125	20	62.5	12	FF-500	168	18	500	450	550	5	19 x 8
L250S/M4P	70m6	140	125	20	62.5	12	FF-500	168	18	500	450	550	5	19 x 8
280S/M2P	65m6	140	125	18	58	11	FF-500	190	18	500	450	550	5	19 x 8

MEI - Minimum Efficiency Index

N/A = not applicable

	MEI	
Model	2 Pole	4 Pole
32-125	≥0.7	*N/A*
32-160	≥0.7	*N/A*
32-200	≥0.7	≥0.7
32-250	≥0.7	≥0.7
40-125	≥0.7	≥0.7
40-160	≥0.7	≥0.7
40-200	≥0.7	≥0.7
40-250	≥0.7	≥0.7
40-315	≥0.7	≥0.7
50-125	≥0.7	≥0.7
50-160	≥0.7	≥0.7
50-200	≥0.7	≥0.7
50-250	≥0.7	≥0.7
50-315	≥0.7	≥0.7
65-125	≥0.7	≥0.6
65-160	≥0.7	≥0.6
65-200	≥0.7	≥0.7
65-250	≥0.7	≥0.7
65-315	≥0.7	≥0.7
80-160	≥0.7	≥0.7
80-200	≥0.7	≥0.7
80-250	≥0.7	≥0.7
80-315	*N/A*	≥0.7
80-400	*N/A*	≥0.7
100-160	≥0.6	≥0.6
100-200	≥0.7	≥0.6
100-250	≥0.7	≥0.6
100-315	*N/A*	≥0.7
100-400	*N/A*	≥0.7
125-200	≥0.7	≥0.7
125-250	*N/A*	≥0.7
125-315	*N/A*	≥0.7
125-400	*N/A*	≥0.7
150-200	≥0.7	≥0.7
150-250	*N/A*	≥0.7
150-315	*N/A*	≥0.6
150-400	*N/A*	≥0.7

Minimum/Maximum Impeller Diameters

*= Angled cut

R= Reduced Max. for 2 Pole model

N/A = not applicable

	2 Pole Models		4 Pole Models	
Model	Min. Ø	Max. Ø	Min. Ø	Max. Ø
32-125	106	142	*N/A*	*N/A*
32-160	139	177	*N/A*	*N/A*
32-200	175	219	170	219
32-250	198	262	198	262
40-125	105	142	*N/A*	*N/A*
40-160	134	177	134	177
40-200	172	219	172	219
40-250	211	260	211	260
40-315	256	326R	263	334
50-125	111	144	111	144
50-160	131	177	131	177
50-200	171	219	171	219
50-250	210	270	210	270
50-315	277	322R	277	344
65-125	120	147	120	147
65-160	135	177	135	177
65-200	162	219	162	219
65-250	215	273	215	273
65-315	258	308R	261	320
80-160	147*	177	147*	177
80-200	170*	222	170*	222
80-250	220	270	220	270
80-315	*N/A*	*N/A*	262	334
80-400	*N/A*	*N/A*	335	438
100-160	149	183	149	183
100-200	171	220	171	220
100-250	210	262R	210	270
100-315	*N/A*	*N/A*	242	312
100-400	*N/A*	*N/A*	320	412
125-200	174	224	174	224
125-250	*N/A*	*N/A*	213	274
125-315	*N/A*	*N/A*	259	334
125-400	*N/A*	*N/A*	329	424
150-200	181*	224*	181*	224*
150-250	*N/A*	*N/A*	213	274
150-315	*N/A*	*N/A*	273	352
150-400	*N/A*	*N/A*	319	399

Noise Level - 2 Pole models

Model	Motor kW	Noise dB(A)
GSD2 32-125	1.5	63
	2.2	64
	3	68
GSD2 32-160	3	68
	4	67
	5.5	70
GSD2 32-200	5.5	70
	7.5	71
	9.2	72
	11	73
	15	74
GSD2 32-250	7.5	71
	9.2	72
	11	73
	15	74
	18.5	75
GSD2 40-125	1.5	63
	2.2	64
	3	68
	4	67
	5.5	70
GSD2 40-160	4	67
	5.5	70
	7.5	71
	9.2	72
	11	73
GSD2 40-200	9.2	71
	11	73
	15	74
	18.5	75
GSD2 40-250	15	74
	18.5	75
	22	75
	30	78
GSD2 40-315	30	78
	37	79
	45	83
	55	84

Model	Motor kW	Noise dB(A)
GSD2 50-125	3	68
	4	67
	5.5	70
	7.5	71
GSD2 50-160	5.5	70
	7.5	71
	9.2	72
	11	73
	15	74
GSD2 50-200	15	74
	18.5	75
	22	75
	30	78
GSD2 50-250	22	75
	30	78
	37	79
	45	83
GSD2 50-315	45	83
	55	84
	75	85
GSD2 65-125	5.5	70
	7.5	71
	9.2	72
	11	73
GSD2 65-160	7.5	71
	9.2	72
	11	73
	15	74
	18.5	75
GSD2 65-200	15	74
	18.5	75
	22	75
	30	78
	37	79
GSD2 65-250	30	78
	37	79
	45	83
	55	84
	75	85

Model	Motor kW	Noise dB(A)
GSD2 65-315	75	85
	90	86
	110	87
GSD2 80-160	11	73
	15	74
	18.5	75
	22	75
	30	78
GSD2 80-200	22	75
	30	78
	37	79
	45	83
	55	84
	75	85
GSD2 80-250	55	84
	75	85
	90	86
	110	87
GSD2 100-160	15	74
	18.5	75
	22	75
	30	78
	37	79
GSD2 100-200	30	78
	37	79
	45	83
	55	84
	75	85
GSD2 100-250	55	84
	75	85
	90	86
	110	87
GSD2 125-200	55	84
	75	85
	90	86
	110	87
GSD2 150-200	37	79
	45	83
	55	84
	75	85
	90	86
	110	87

Note: The overall sound pressure level is the value measured 1m away from the pump set, and is based on WEG W21 IE3 motors.

Noise Level - 4 Pole models

Model	Motor kW	Noise dB(A)
GSD4 32-200	1.1	57
	1.5	59
GSD4 32-250	1.1	57
	1.5	59
	2.2	61
GSD4 40-160	1.1	57
GSD4 40-200	1.1	57
	1.5	59
	2.2	61
GSD4 40-250	2.2	61
	3	63
	4	64
GSD4 40-315	4	64
	5.5	66
	7.5	67
GSD4 50-125	1.1	57
GSD4 50-160	1.1	57
	1.5	59
GSD4 50-200	2.2	61
	3	63
GSD4 50-250	3	63
	4	64
	5.5	66
GSD4 50-315	5.5	66
	7.5	67
	11	71
GSD4 65-125	1.1	57
	1.5	59
GSD4 65-160	1.1	57
	1.5	59
	2.2	61
GSD4 65-200	2.2	61
	3	63
	4	64
GSD4 65-250	4	64
	5.5	66
	7.5	67
GSD4 65-315	11	71
	15	72

Model	Motor kW	Noise dB(A)
GSD4 80-160	1.5	59
	2.2	61
	3	63
	4	64
GSD4 80-200	3	63
	4	64
	5.5	66
	7.5	67
GSD4 80-250	7.5	67
	11	71
	15	72
GSD4 80-315	11	71
	15	72
	18.5	73
	22	74
GSD4 80-400	22	74
	30	75
	37	76
	45	78
	55	79
GSD4 100-160	2.2	61
	3	63
	4	64
GSD4 100-200	3	63
	4	64
	5.5	66
	7.5	67
	11	71
GSD4 100-250	7.5	67
	11	71
	15	72
	18.5	73
GSD4 100-315	11	71
	15	72
	18.5	73
	22	74
	30	75

Model	Motor kW	Noise dB(A)
GSD4 100-400	18.5	73
	22	74
	30	75
	37	76
	45	78
	55	79
GSD4 125-200	5.5	66
	7.5	67
	11	71
	15	72
GSD4 125-250	11	71
	15	72
	18.5	73
	22	74
	30	75
GSD4 125-315	18.5	73
	22	74
	30	75
	37	76
GSD4 125-400	30	75
	37	76
	45	78
	55	79
	75	80
GSD4 150-200	5.5	66
	7.5	67
	11	71
GSD4 150-250	18.5	73
	22	74
	30	75
	37	76
	45	78
GSD4 150-315	22	74
	30	75
	37	76
	45	78
	55	79
	75	80
GSD4 150-400	37	76
	45	78
	55	79
	75	80

Note: The overall sound pressure level is the value measured 1m away from the pump set, and is based on WEG W21 IE3 motors.

Motor Data - WEG W21 IE3 Motors - 400 V

2 pole motors - 400V Data																		
Output kW	IEC Frame	Rated Speed	Full load current	Locked rotor current	Full load torque	Locked rotor torque	Break down torque	Efficiency at % of full load			Power factor at % of full load			Sound pressure level	Moment of inertia	Max. locked rotor time(s)		Approx weight
kW		rpm	A	IL/Ir	Tr (Nm)	TL/Tr	Tb/Tr	50%	75%	100%	50%	75%	100%	dB(A)	J (kgm²)	Cold	Hot	(kg)
1.5	90S/L	2875	3.07	7.6	4.99	3.3	3.3	83	85	85	0.64	0.76	0.83	62	0.002	33	15	21.5
2.2	90S/L	2870	4.43	7.5	7.33	3.4	3.5	86	86.5	86.3	0.65	0.77	0.83	62	0.0026	26	12	24.5
3	100L	2910	5.77	8.5	9.81	3.4	3.4	85	86.5	87.2	0.69	0.81	0.86	67	0.0064	33	15	32
4	112M	2900	7.6	7.7	13.1	2.9	3.5	87	88	88.3	0.69	0.8	0.86	64	0.008	48	22	41
5.5	132S	2930	10.1	8.3	18	2.6	3.2	88.3	89.7	90	0.72	0.82	0.88	67	0.0216	51	23	65
7.5	132S	2935	13.9	8.5	24.4	3	3.4	85.1	90.2	91	0.69	0.8	0.86	67	0.0252	37	17	73
9.2	132M	2930	16.6	8.5	30	2.9	3.3	89.1	90.5	90.8	0.74	0.86	0.88	67	0.0306	27	16	76
11	160M/L	2950	20.9	8.6	35.6	2.3	3	90	91.5	91.5	0.65	0.78	0.83	70	0.0506	26	12	98
15	160M/L	2945	28	8.3	48.7	2.4	2.9	91	92	92.2	0.71	0.81	0.84	70	0.0565	24	11	103
18.5	160M/L	2945	33.9	9	60.1	2.3	2.7	91.5	92.6	92.6	0.67	0.79	0.85	70	0.065	24	11	124
22	180M/L	2955	39.2	8.6	71.1	2.8	3	92	93	93	0.75	0.83	0.87	70	0.1192	20	9	164
30	200M/L	2955	53.9	7.6	97.1	2.7	2.4	91.5	93	93.5	0.75	0.83	0.86	74	0.2063	77	35	215
37	200M/L	2960	65.4	8.4	120	2.6	2.6	92.5	93.5	93.8	0.76	0.84	0.87	74	0.2114	35	16	230
45	225S/M	2965	76.5	8.5	145	2.4	2.9	93.8	94	94.3	0.82	0.88	0.9	82	0.4961	44	20	410
55	250S/M	2960	92.3	8.5	178	2.3	3	93.8	94.5	94.5	0.85	0.89	0.91	82	0.5303	40	18	470
75	250S/M	2965	126	8.5	241	2.5	3	93.8	94.5	94.7	0.85	0.89	0.91	82	0.5943	25	14	500
90	280S/M	2975	152	8	289	2.2	2.8	93.8	95	95.2	0.82	0.88	0.9	83	1.3139	92	42	780
110	315S/M	2975	189	8	353	1.8	2.6	94.5	95.4	95.4	0.76	0.84	0.88	83	1.4014	55	25	830

4 pole motors - 400V Data																		
Output kW	IEC Frame	Rated Speed	Full load current	Locked rotor current	Full load torque	Locked rotor torque	Break down torque	Efficiency at % of full load			Power factor at % of full load			Sound pressure level	Moment of inertia	Max. locked rotor time(s)		Approx weight
kW		rpm	A	IL/Ir	Tr (Nm)	TL/Tr	Tb/Tr	50%	75%	100%	50%	75%	100%	dB(A)	J (kgm²)	Cold	Hot	(kg)
1.1	90S/L	1455	2.34	7.6	7.22	2.5	3.3	83	84.5	84.8	0.59	0.72	0.8	49	0.0055	33	15	19.5
1.5	90S/L	1450	3.15	7.4	9.91	2.6	3.4	84	86	86	0.58	0.72	0.8	49	0.0066	29	13	23
2.2	100L	1435	4.56	7.4	14.6	3.2	3.5	86.5	87	87	0.6	0.73	0.8	53	0.009	40	18	31.5
3	100L	1440	6.31	7.8	19.9	3.5	3.7	87	88	88	0.58	0.71	0.78	53	0.012	33	15	40
4	112M	1450	8.2	7	26.4	2.3	3.1	88.7	89.1	89.1	0.6	0.72	0.79	56	0.0182	33	15	44
5.5	132S	1465	10.3	8.5	35.9	2.4	3.4	90	90.7	90.7	0.67	0.79	0.85	56	0.0528	33	15	69
7.5	132M	1465	14.2	8.5	49	2.5	3.4	87.5	90	90.6	0.67	0.78	0.84	56	0.0642	29	13	78
11	160M/L	1470	21.7	7.5	71.5	2.8	3	89.5	91	91.5	0.62	0.73	0.8	67	0.1071	26	12	123
15	160M/L	1465	28.7	6.3	97.8	2.4	2.5	89.7	91.2	92.1	0.65	0.76	0.82	67	0.1263	24	11	118
18.5	180M/L	1470	33.9	8.3	121	2.7	2.8	91	92.2	92.6	0.7	0.81	0.85	64	0.2088	26	12	159
22	180M/L	1470	40.6	8.6	143	2.8	2.9	92	93	93.1	0.68	0.78	0.84	64	0.2393	24	11	209
30	200M/L	1480	56.4	7.3	193	2.7	2.9	93	93.5	93.7	0.65	0.76	0.82	69	0.3743	42	19	250
37	225S/M	1475	63.9	7.2	239	2.2	2.7	92.5	94	94	0.77	0.85	0.88	70	0.6999	31	14	380
45	225S/M	1480	79.3	7.5	290	2.5	2.8	93	94	94.2	0.76	0.84	0.87	70	0.8398	37	17	400
55	250S/M	1480	98.7	8	355	2.8	3	93	94.2	94.6	0.7	0.8	0.85	70	1.1548	20	9	470
75	L250S/M	1480	132	8.4	484	2.8	3.3	95.2	95.5	95.5	0.72	0.83	0.86	70	1.22	20	11	531